BILL OF MATERIAL

ITEM	MAT'L	DESCRIPTION	REQ'D		REMARKS

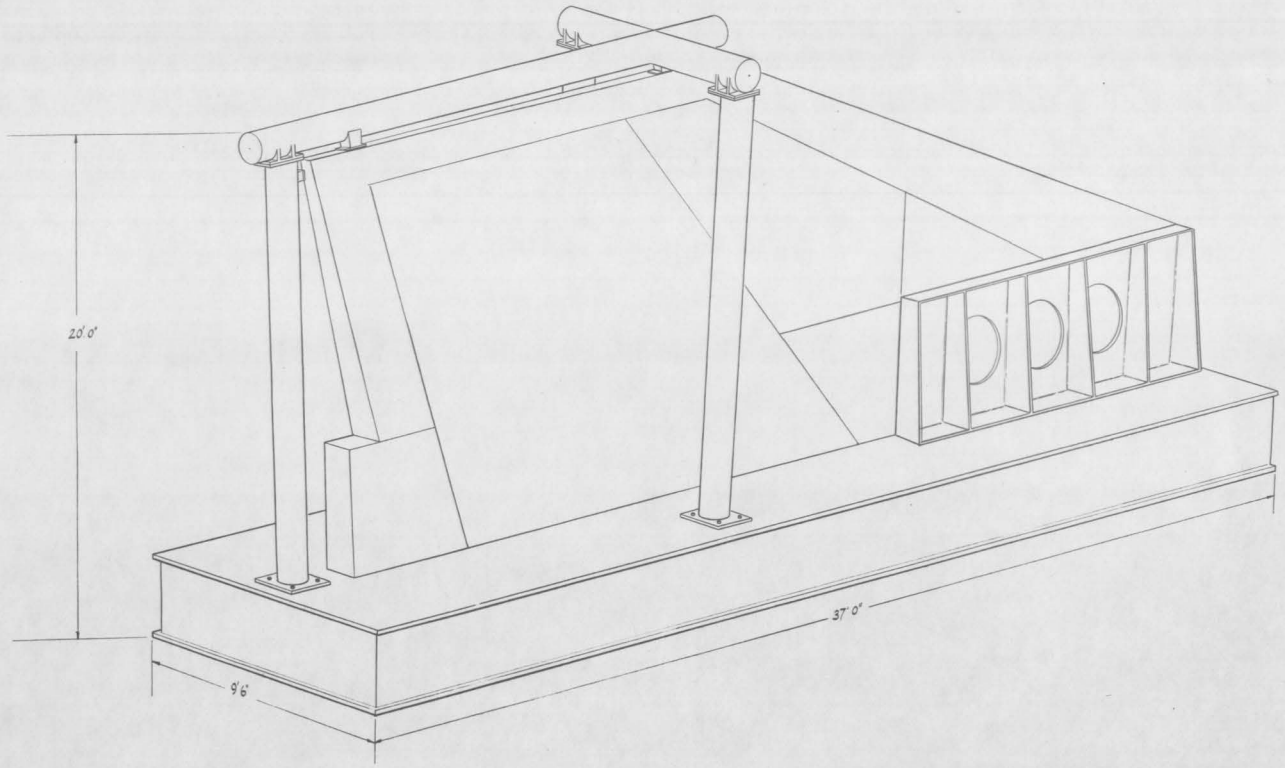

NO.	DATE	CHANGES	DATE	BY	APVD.

A.V. ROE CANADA LIMITED

MALTON **AIRCRAFT TOOL DESIGN** ONTARIO

TOLERANCES: WEIGHT AS NOTED; FRACTIONAL ±1/64; DECIMAL ±.005; STRUCTURAL ±1/16

TITLE: MASTER MODEL INNER WING

DRAWN: Wm. Fry 11/5

DESIGN: W. Gaddings

DETAIL

CHECKED

APPROVED

DATE

TOOL NO.: 7-1062-3-MM1

PART GROUP

SHEET NO.

NO. OF SHTS.

SHEET NO.	TOTAL NO.

BILL OF MATERIAL

ITEM	MAT'L	DESCRIPTION	REQ'D		REMARKS

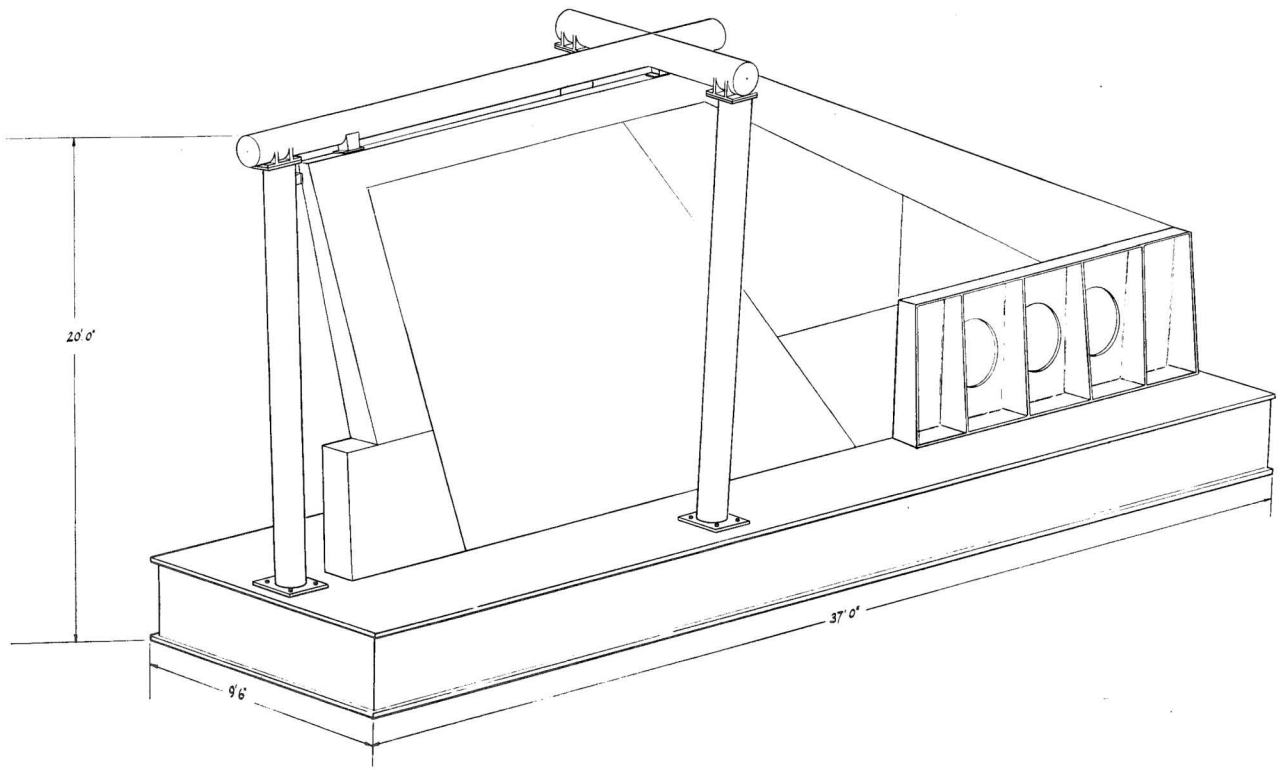

NO.	CHANGE		DATE	BY	NOTES
NO.					

A.V. ROE CANADA LIMITED

ISSUE/REV. **AIRCRAFT TOOL DESIGN** CONTRACT

TOLERANCES UNLESS OTHERWISE SPECIFIED: FRACTIONAL ±1/64 DECIMAL ±.005 ANGULAR ±1/2°

TITLE: MASTER MODEL INNER WING

SCALE: HALF 1/8 FULL

DESIGN: R. Goldenya

DETAIL

CHECKED

APPROVED

DATE

DWG. NO. 7-1062-X-MN1

SHEET NO.

NO. OF SHEETS

PART NUMBER

NO.	NAME