BILL OF MATERIAL

ITEM	MATL.	DESCRIPTION	REQ'D.		REMARKS

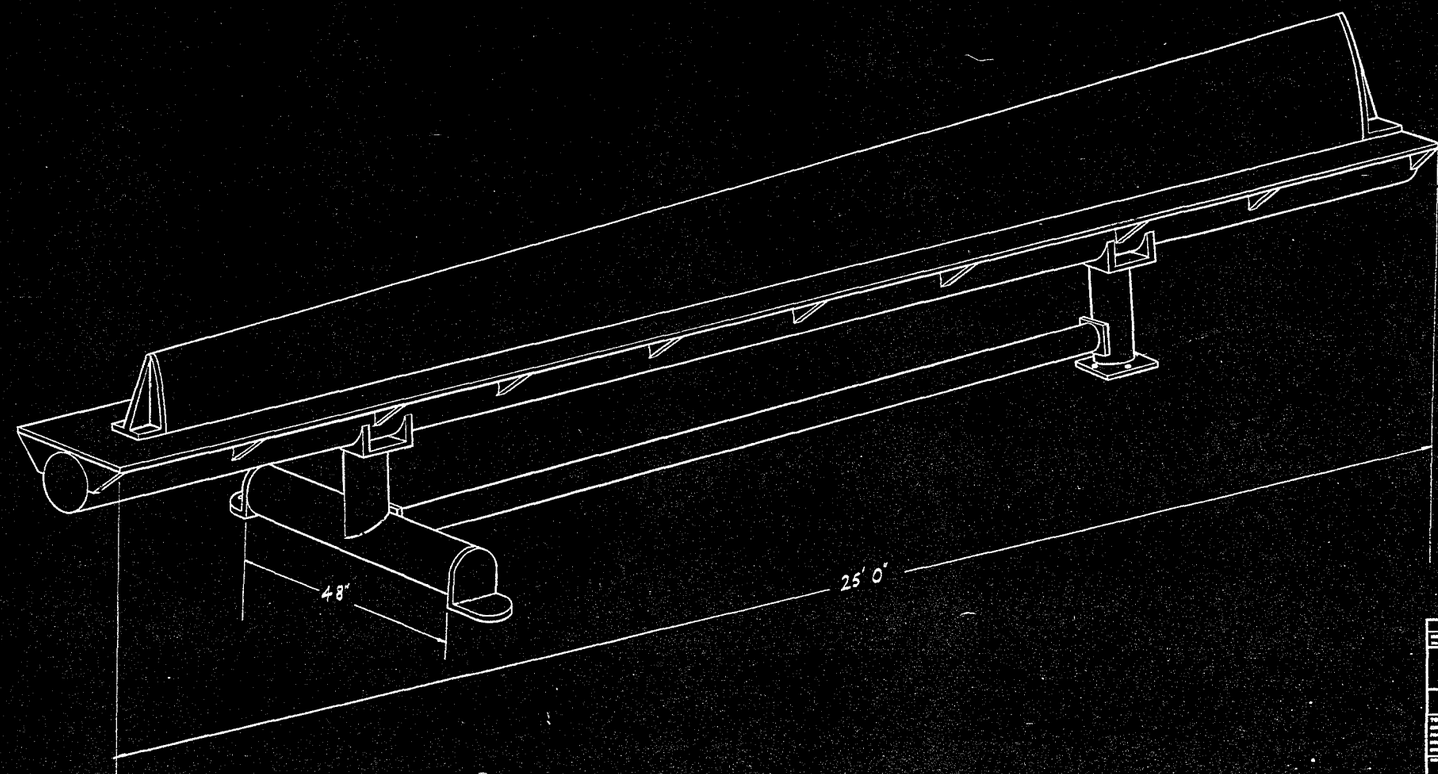

NO.	DATE	CHANGES	DATE	BY	APPD

AVRO AIRCRAFT LIMITED

PRODUCTION ENGINEERING DEPARTMENT
TOOL DESIGN

TOLERANCES
DECIMALS ±0.005
FRACTIONALS ±1/16
ANGULAR ±0.25°
MACHINED ±1/64

DRAWN R. APPROK
DETAIL
CHECKED
APPROVED
DATE 4th Feb. 55.

TITLE: MASTER MODEL
INNER WING LEADING EDGE
R.H.

TOOL NO. 7-1062-6-MM1