BILL OF MATERIAL

ITEM	MAT'L	DESCRIPTION			

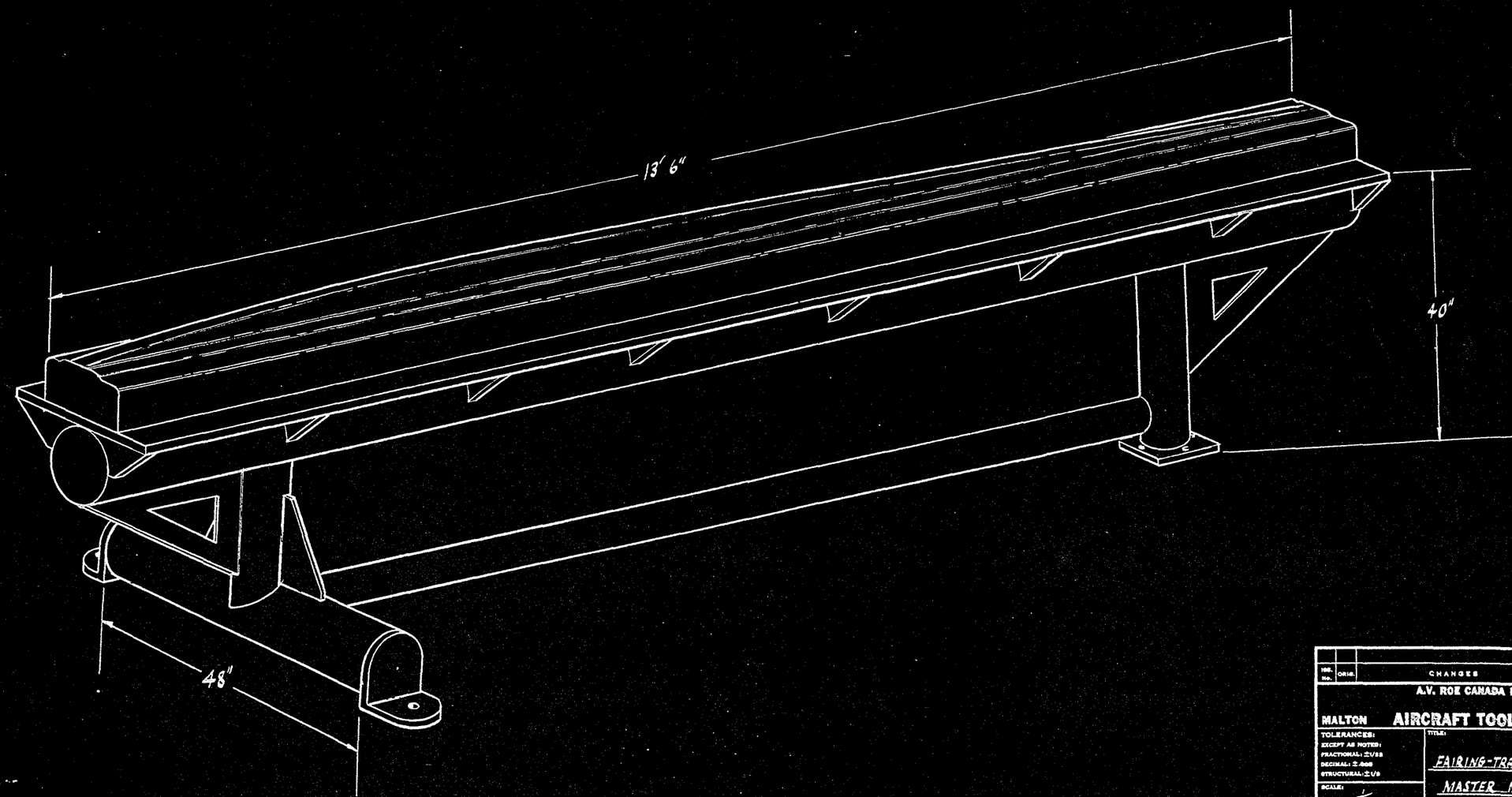

NO.	ORIG.	CHANGES	DATE	

A.V. ROE CANADA LIMITED

MALTON **AIRCRAFT TOOL DESIGN**

TOLERANCES:
EXCEPT AS NOTED:
FRACTIONAL: ±1/32
DECIMAL: ±.005
STRUCTURAL: ±1/8

SCALE: 1/8

TITLE: FAIRING-TRANSPORT-JOINT MASTER MODEL

DESIGN O. Gidlaujs
DETAIL
CHECKED
APPROVED
DATE 10-2-55

TOOL No. / PART NUMBER
7-1062-3-MM 2 L.H. TOP
7-1062-4-MM 2 R.H TOP
7-1062-3-MM 3 L.H BOTTOM
7-1062-4-MM 3 R.H BOTTOM