BILL OF MATERIAL

ITEM	MAT'L	DESCRIPTION	REQ'D		REMARKS

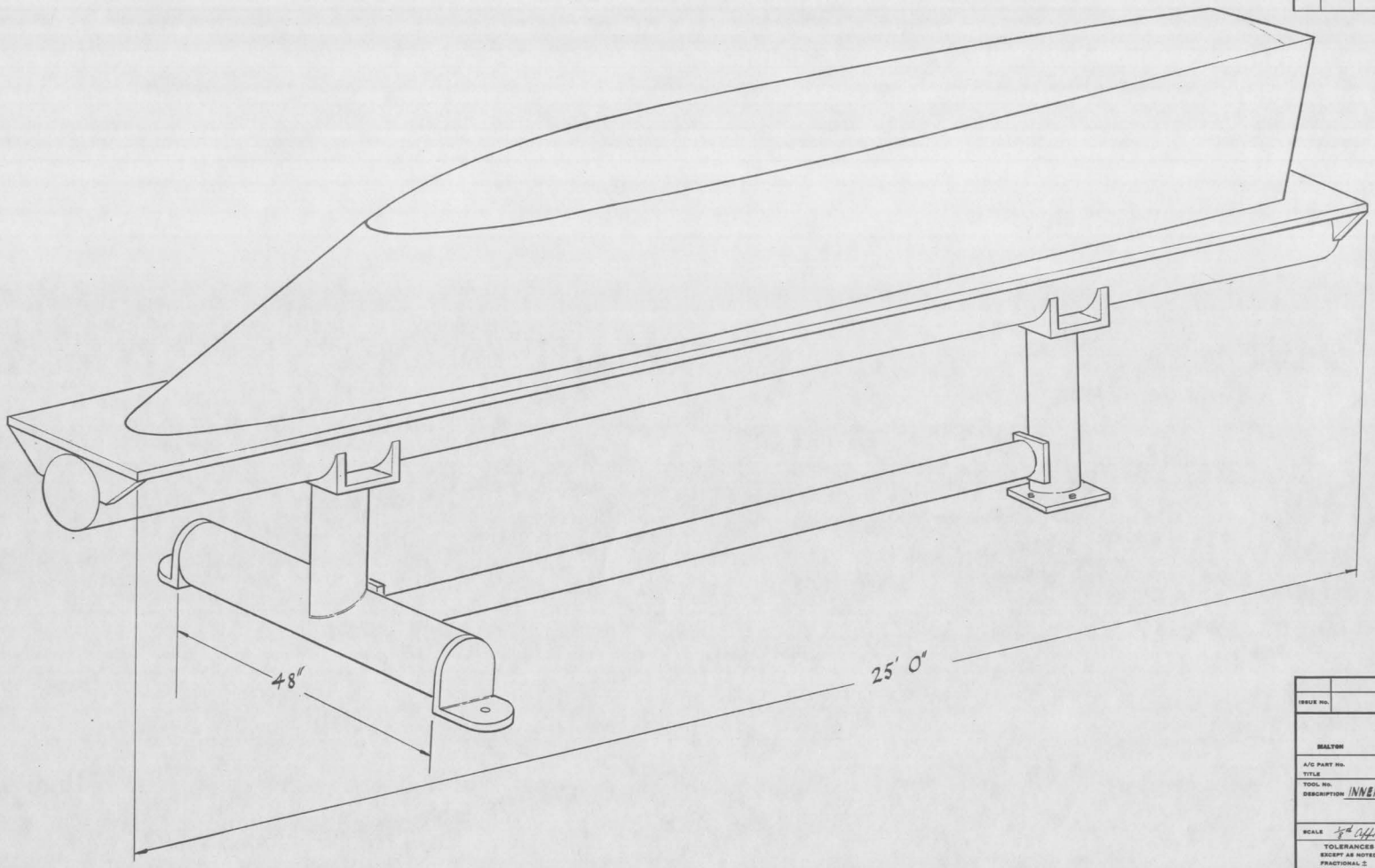

ISSUE No.	CHANGES	DATE	BY	CH'K'D

A. V. ROE CANADA LIMITED
AIRCRAFT TOOL DESIGN

MALTON — CANADA

A/C PART No. — ISSUE No.

TITLE

TOOL No.

DESCRIPTION INNER & OUTER WING TRANSPORT JOINT MASTER MODEL

SCALE 1/4th Approx

TOLERANCES EXCEPT AS NOTED
FRACTIONAL ±
DECIMAL ±

DESIGN A. Gidolunja
DETAIL
CHECKED
APPROVED
DATE 11th FEB 55

W.O. No.
SHEET No. — No. OF SHEETS

7-1062-4-MM1

3066

BILL OF MATERIAL

ITEM	MAT'L	DESCRIPTION	REQ'D		REMARKS

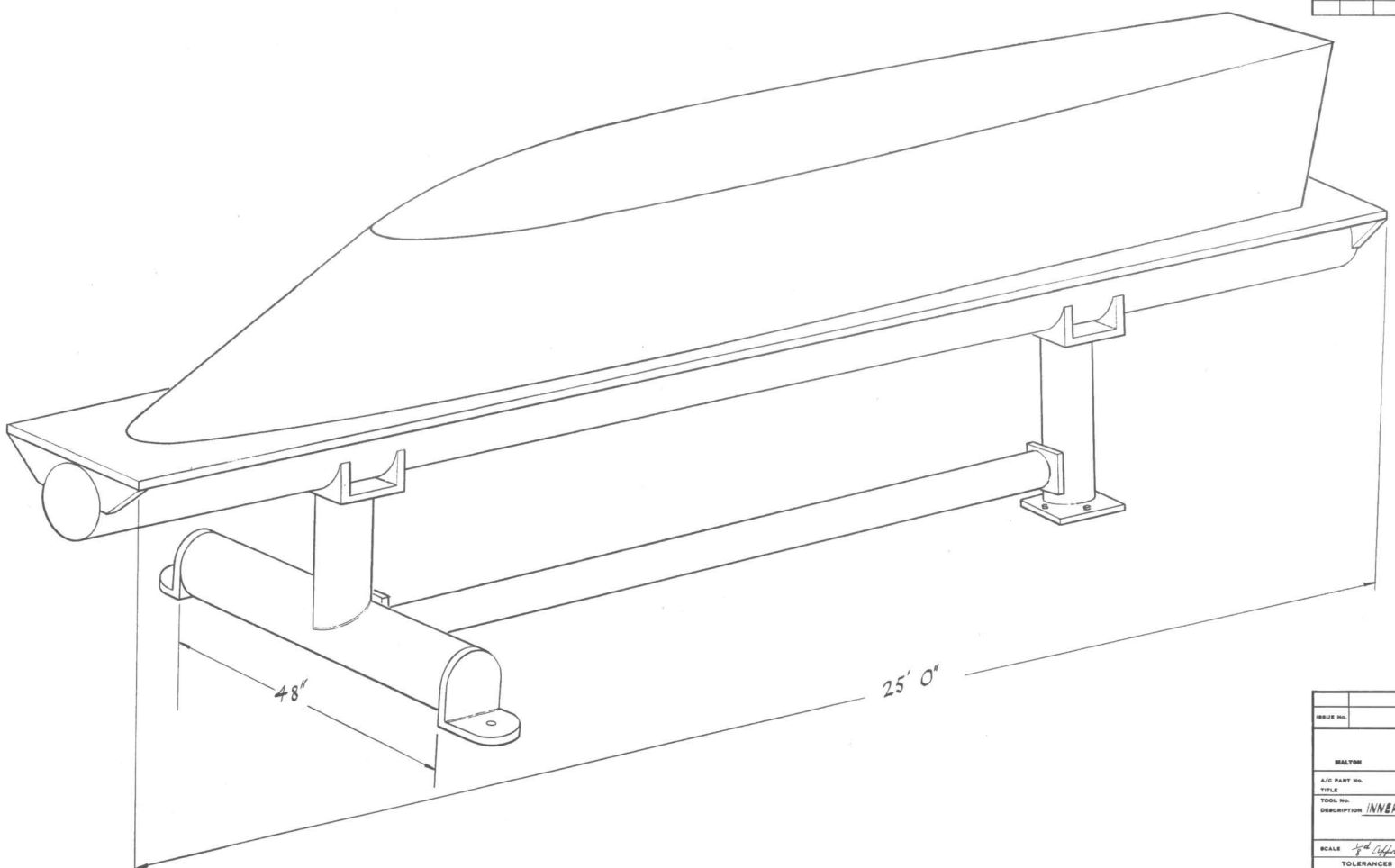

ISSUE No.	CHANGES	DATE	BY	CH'K'D

A. V. ROE CANADA LIMITED
AIRCRAFT TOOL DESIGN

MALTON — ONTARIO

A/C PART No. — ISSUE No.

TITLE

TOOL No.

DESCRIPTION INNER & OUTER WING TRANSPORT JOINT MASTER MODEL

SCALE 1/4" = 1 foot

TOLERANCES EXCEPT AS NOTED
FRACTIONAL ±
DECIMAL ±

DESIGN R. Gidolinja
DETAIL
CHECKED
APPROVED
DATE 11th FEB 55

W.O. No.
SHEET No. — No. OF SHEETS

7-1062-4-MM1

2086