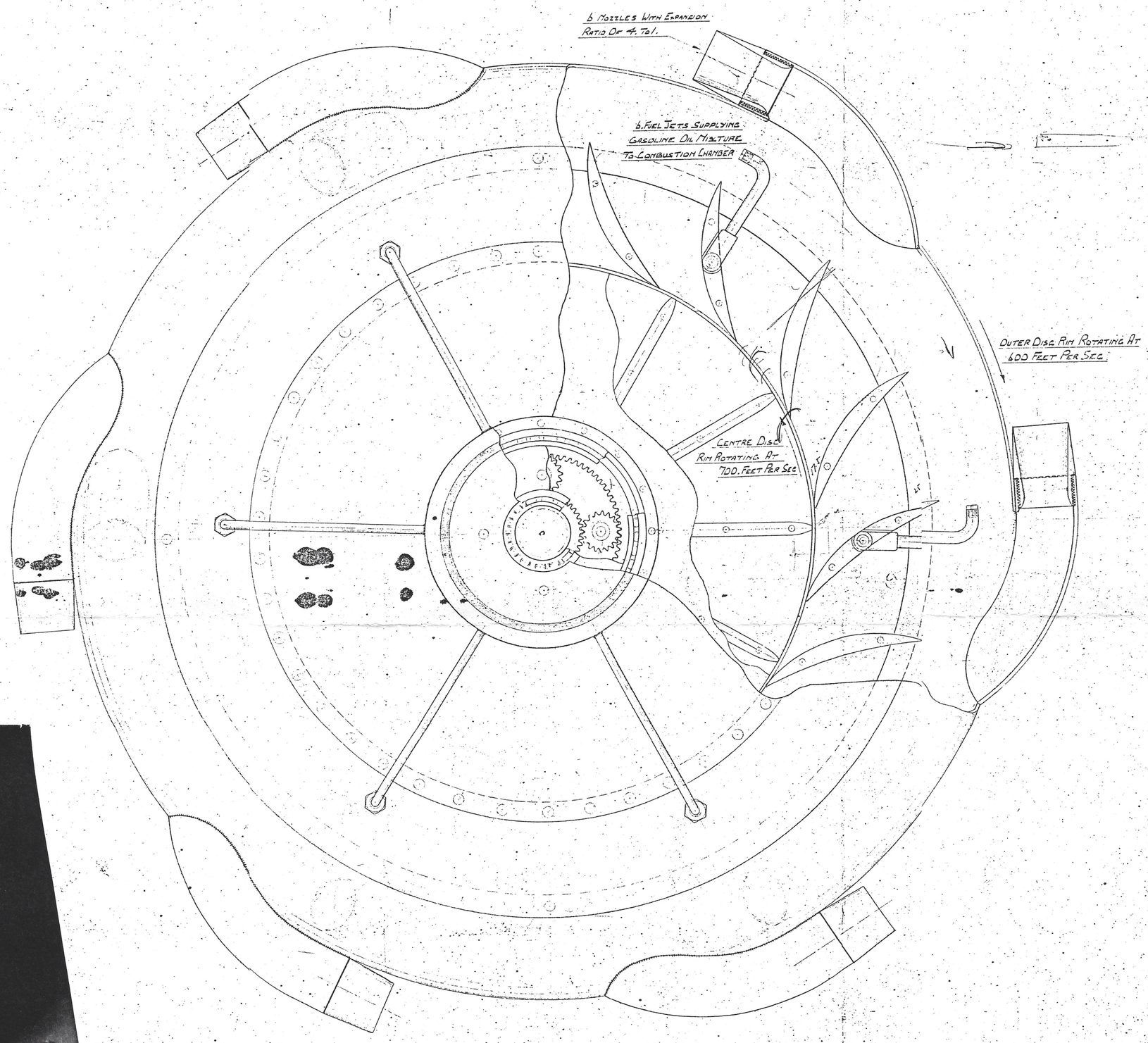

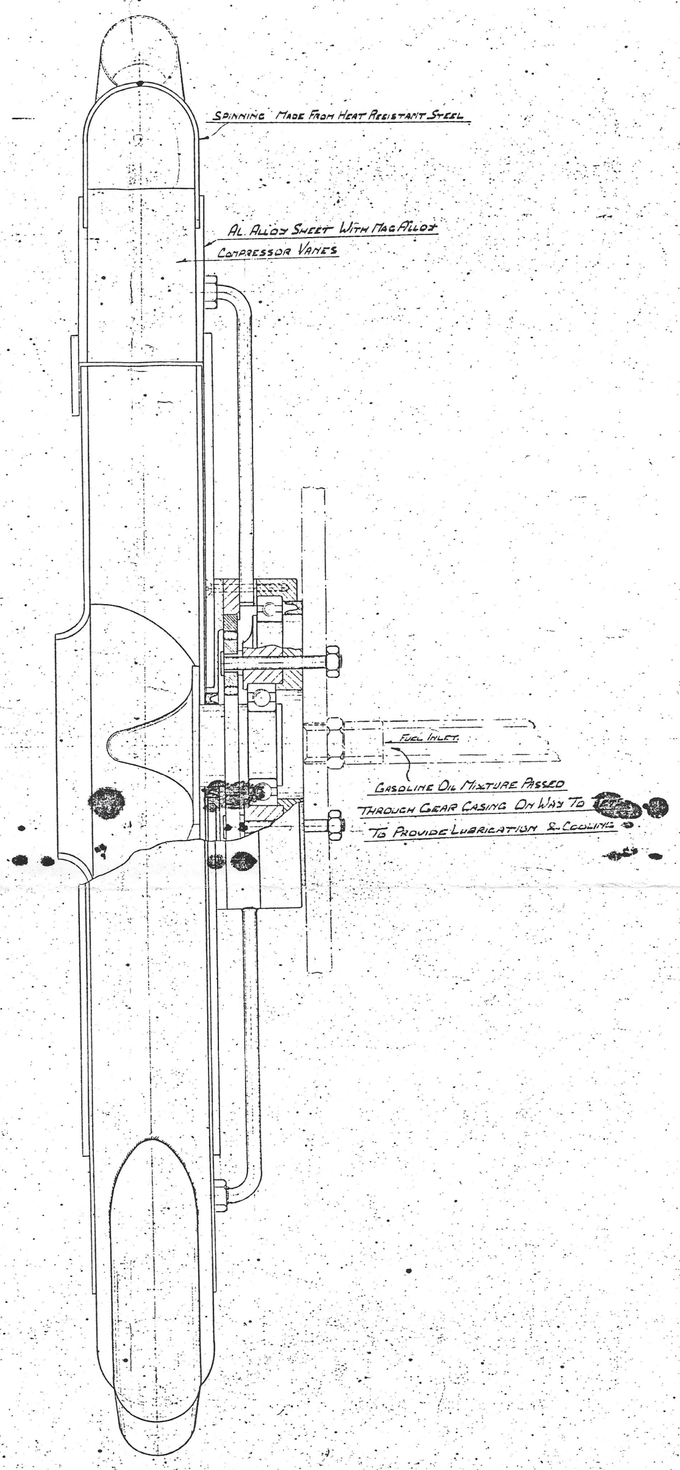

Disc With Contrarotating Compressor

Figure I

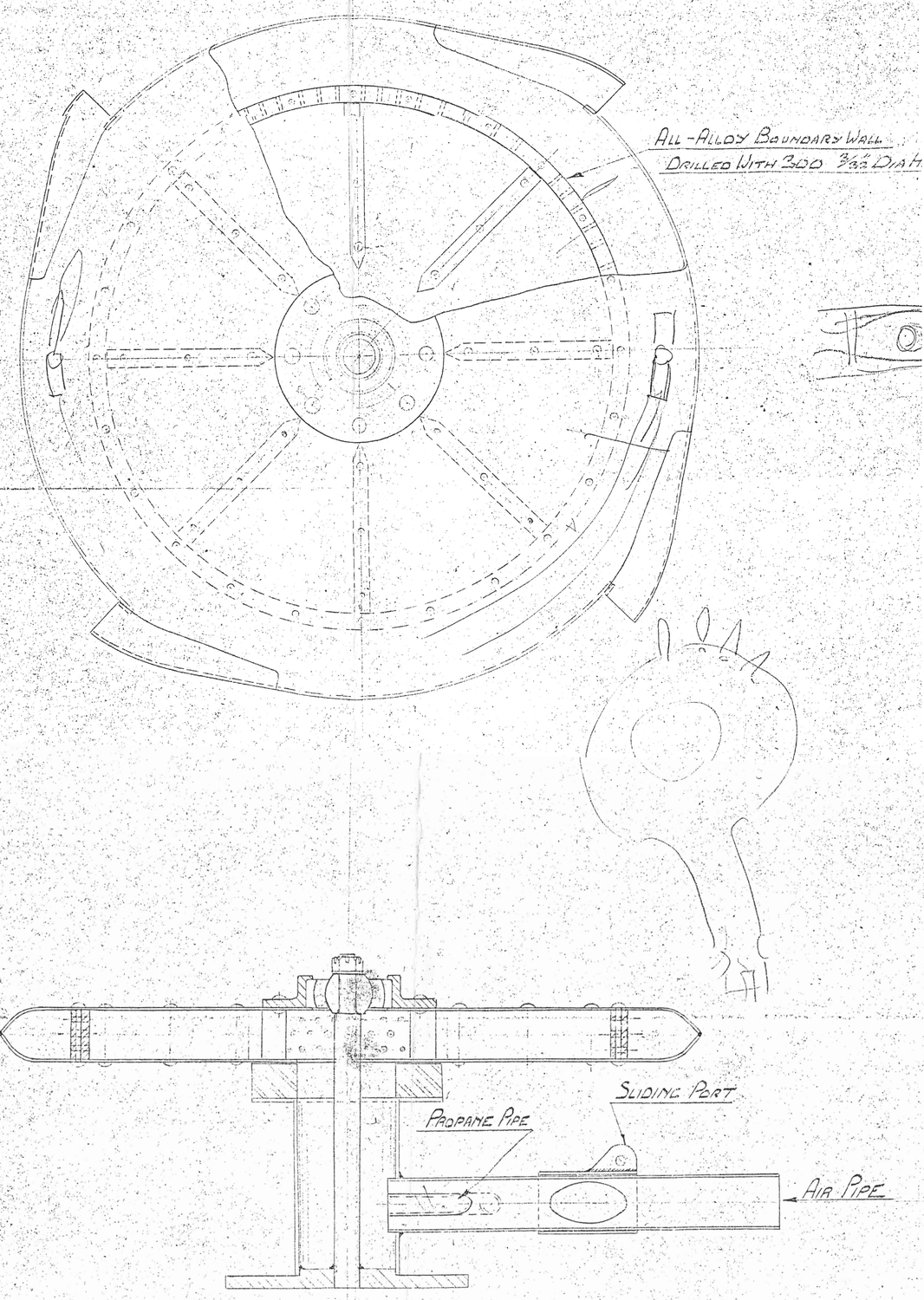

Plain Rotating Disc.

Figure "2".

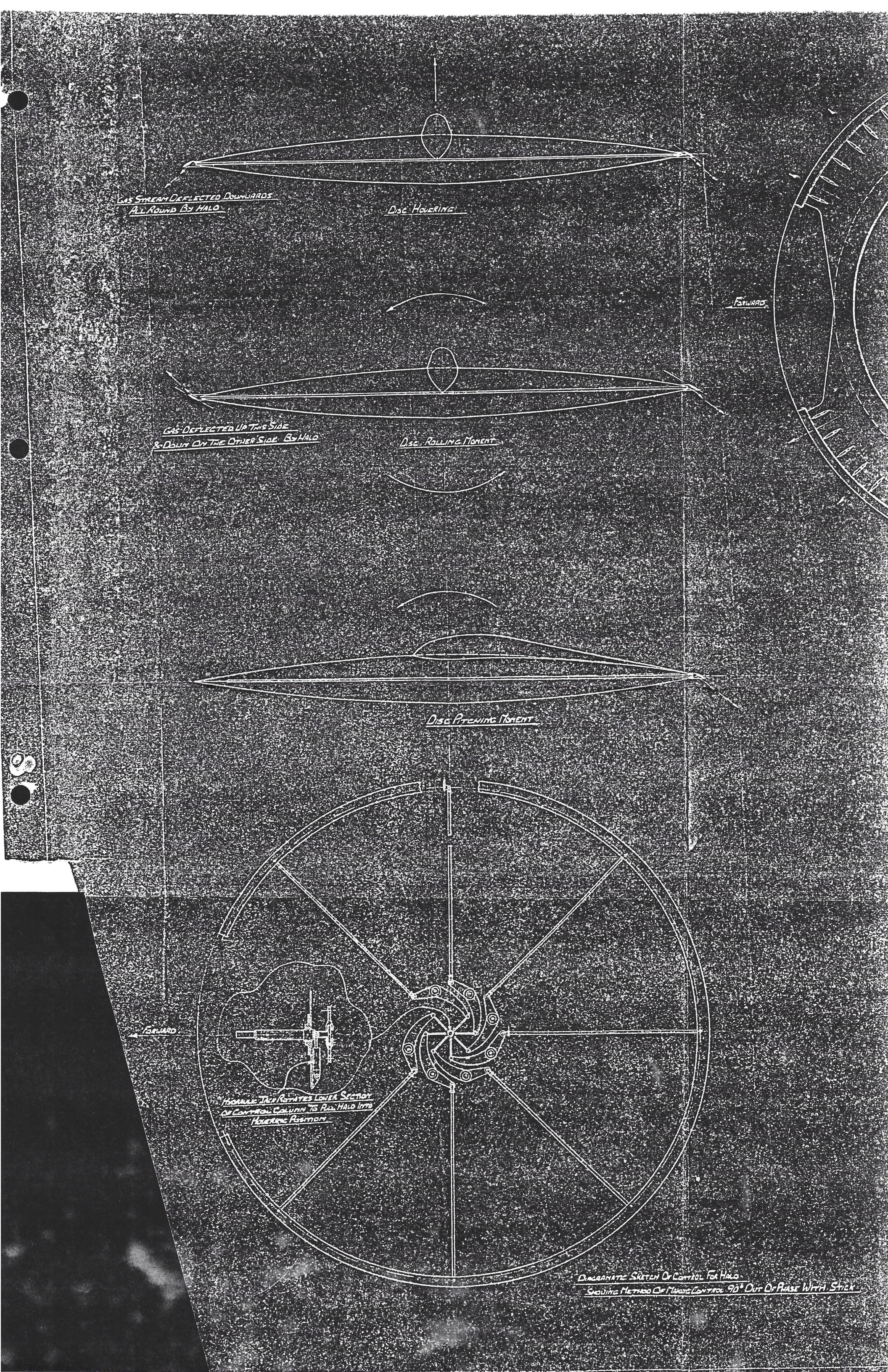
Gas Stream Deflected Downwards
All Round By Halo
Disc Hovering
Forward
Gas Deflected Up This Side
& Down On The Other Side By Halo
Disc Rolling Moment
Disc Pitching Moment
Forward
Hydraulic Jack Rotates Lower Section
Of Control Column To Roll Halo Into
Hovering Position
Diagramatic Sketch Of Control For Halo.
Showing Method Of Making Control 90° Out Of Phase With Stick.

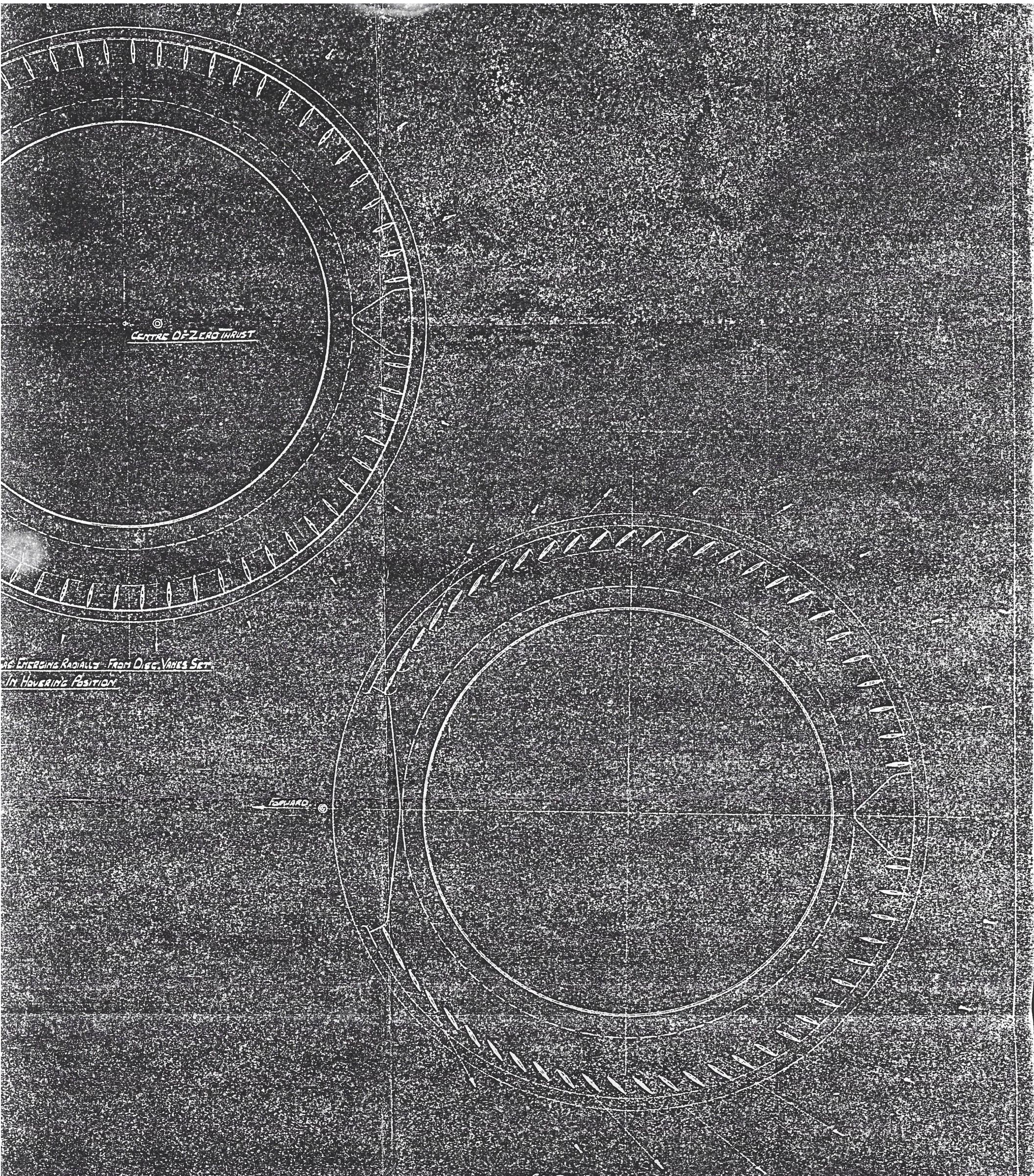

GENERAL ARRANGEMENT No 3. CONTROLS

Y Ch Fox

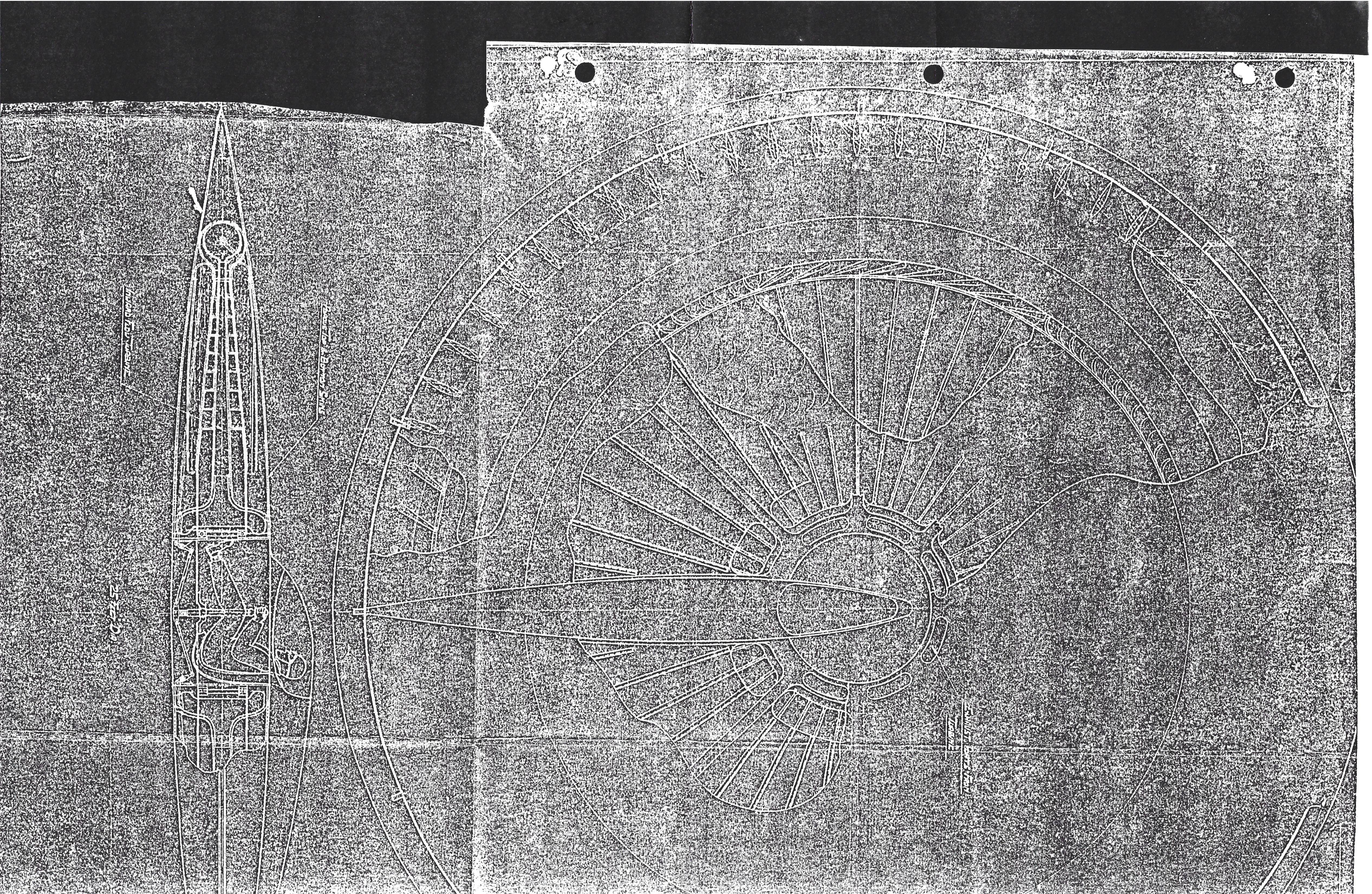
Fig. 2
Fig. 3
Fig. 4

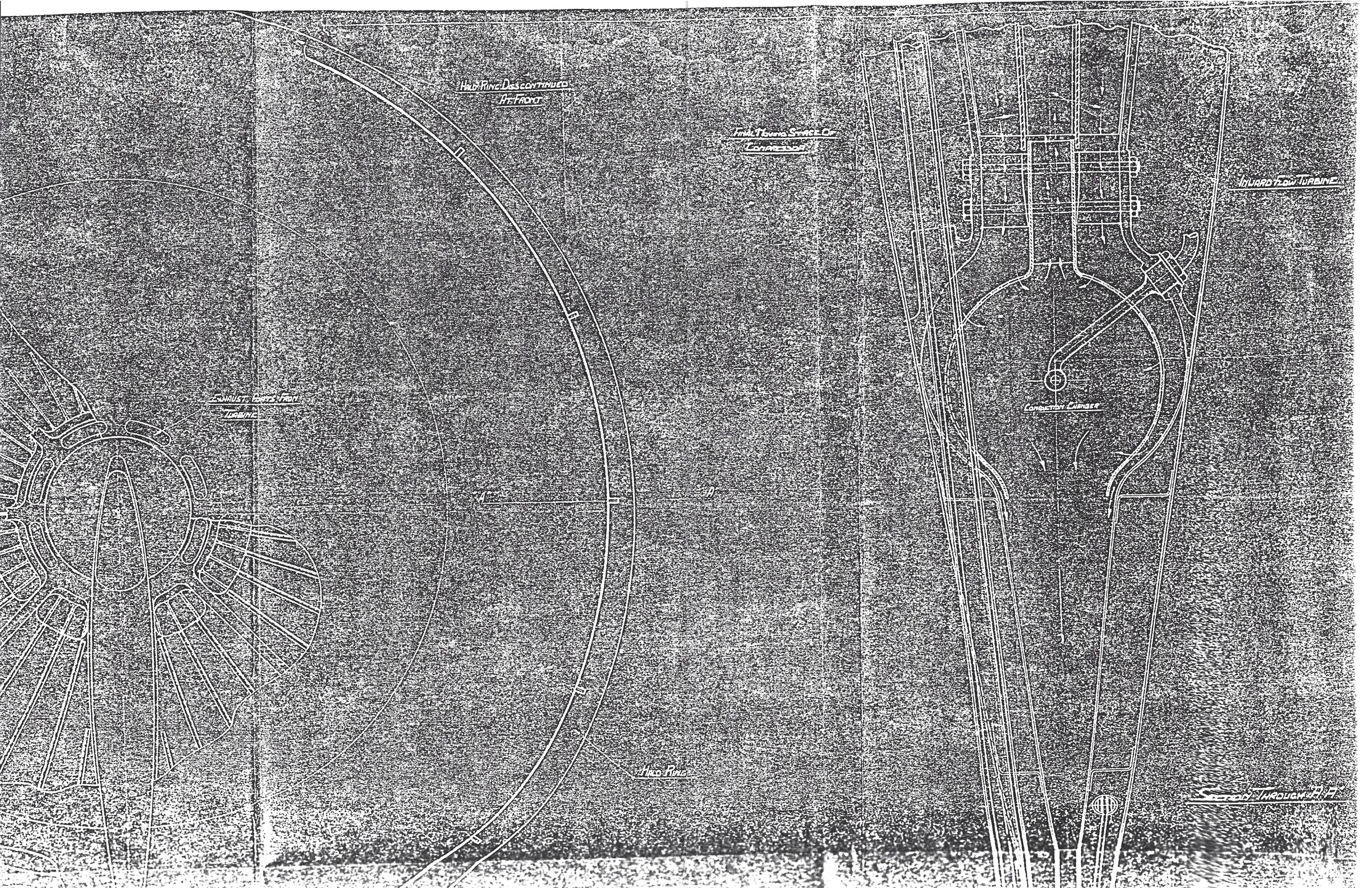
Halo Ring Discontinued At Front
Final Nozzle Stage Of Turbine
Inward Flow Turbine
Exhaust Ports From Turbine
Combustion Chamber
Halo Ring
Section Through A-A

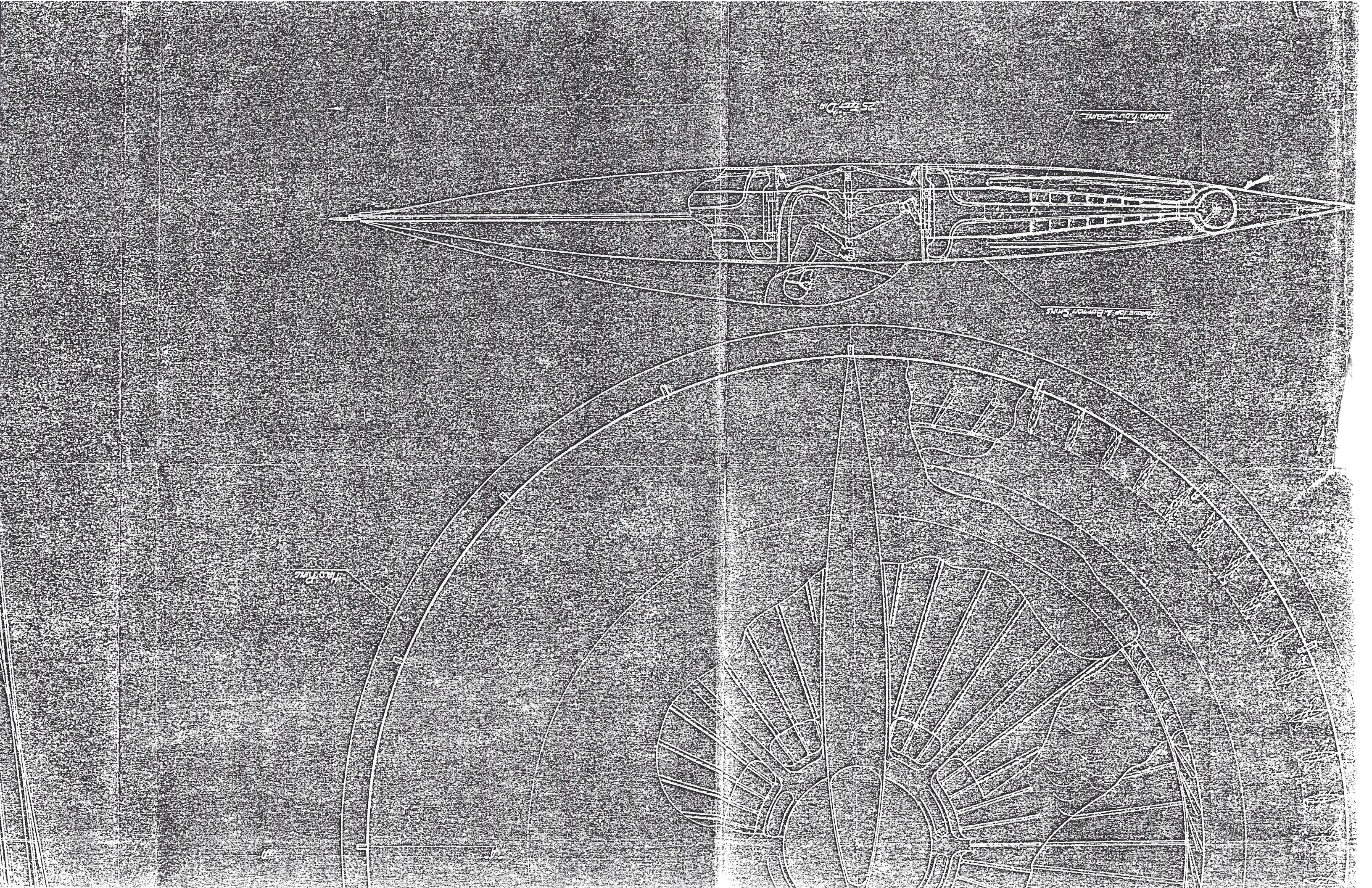

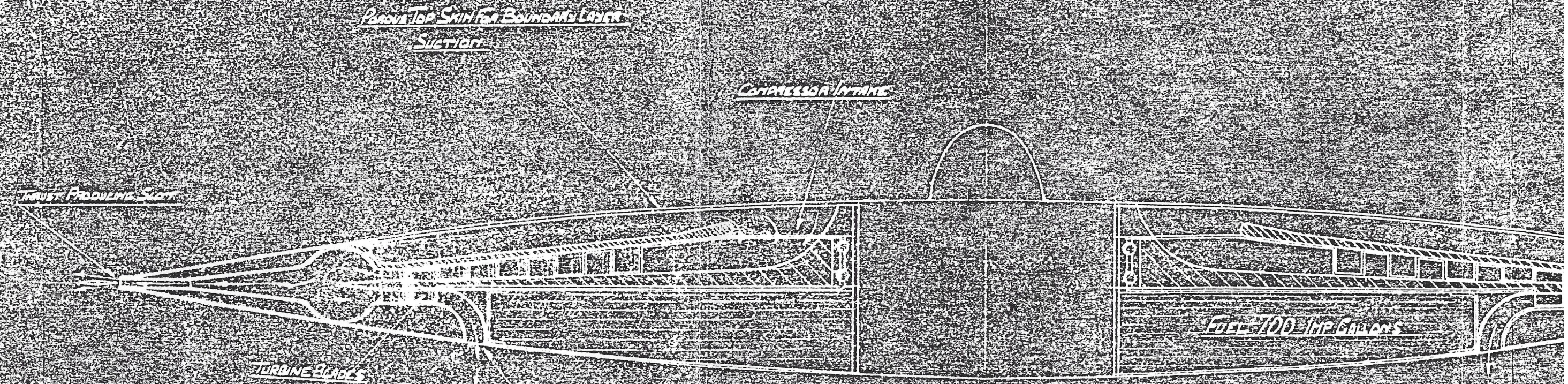

Section Through Disc Looking Forward

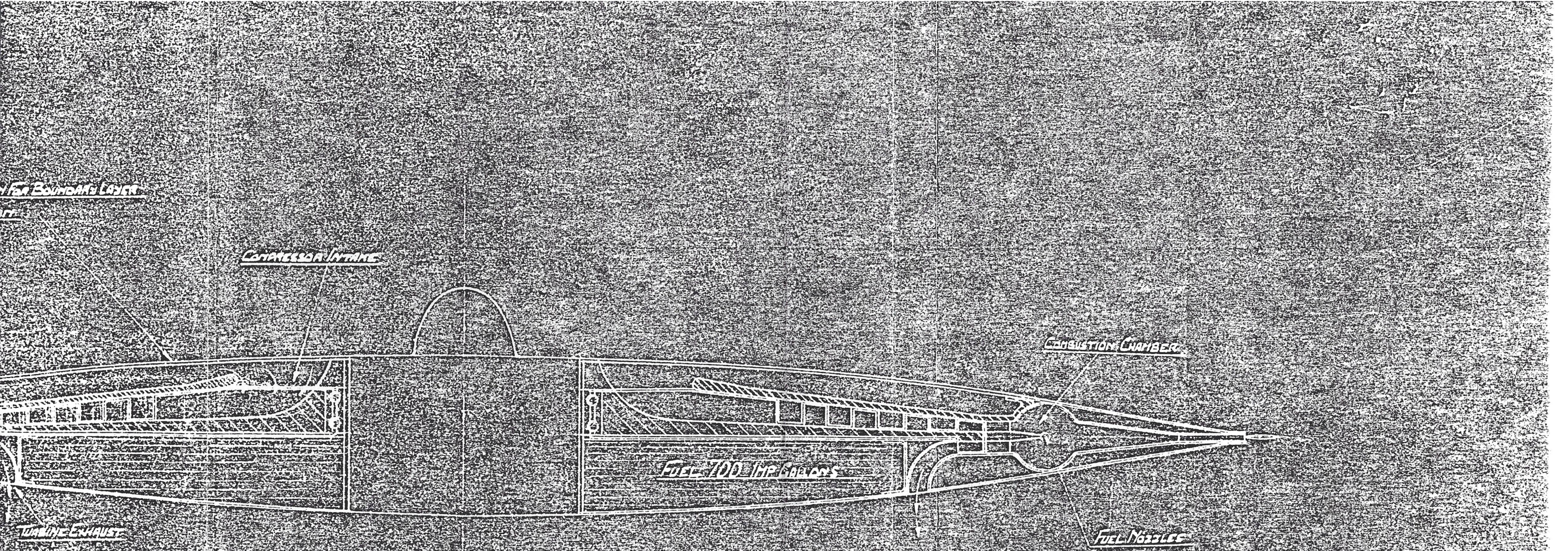

Section Through Disc Looking Forward

General Arrangement No. I

For Further Details See G.A. No. 2.

J. Chas. Ford

2156-704P-1A

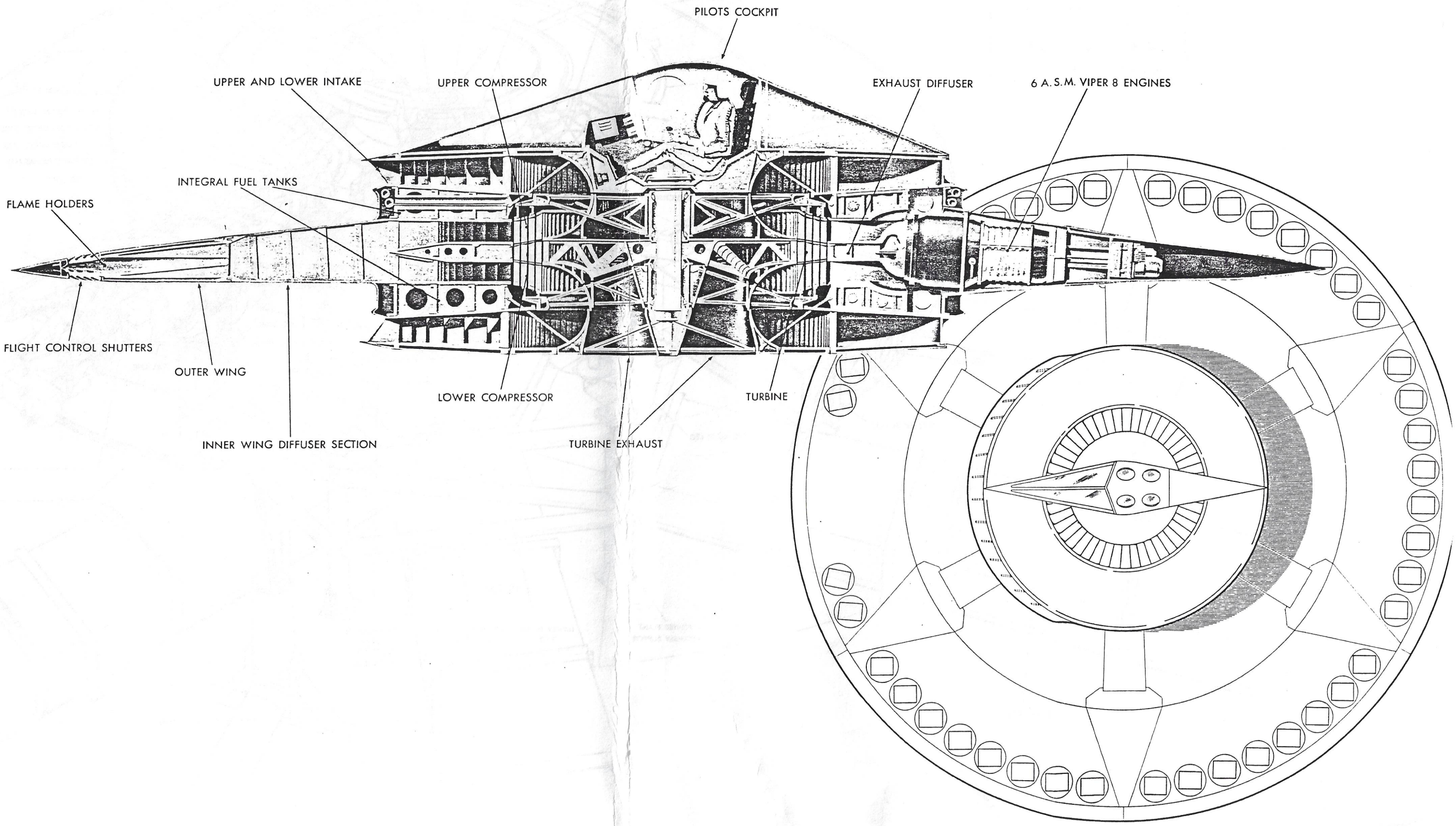

PLAN VIEW AND SECTION THROUGH AIRCRAFT

2565-606A-2

NOTE
ONE PITOT RAKE IN BOTTOM INLET NOT SHOWN

RIG DRG No. 17A411-6
MODEL DRG No. 1N410-11
A/C DIA. 424 IN.

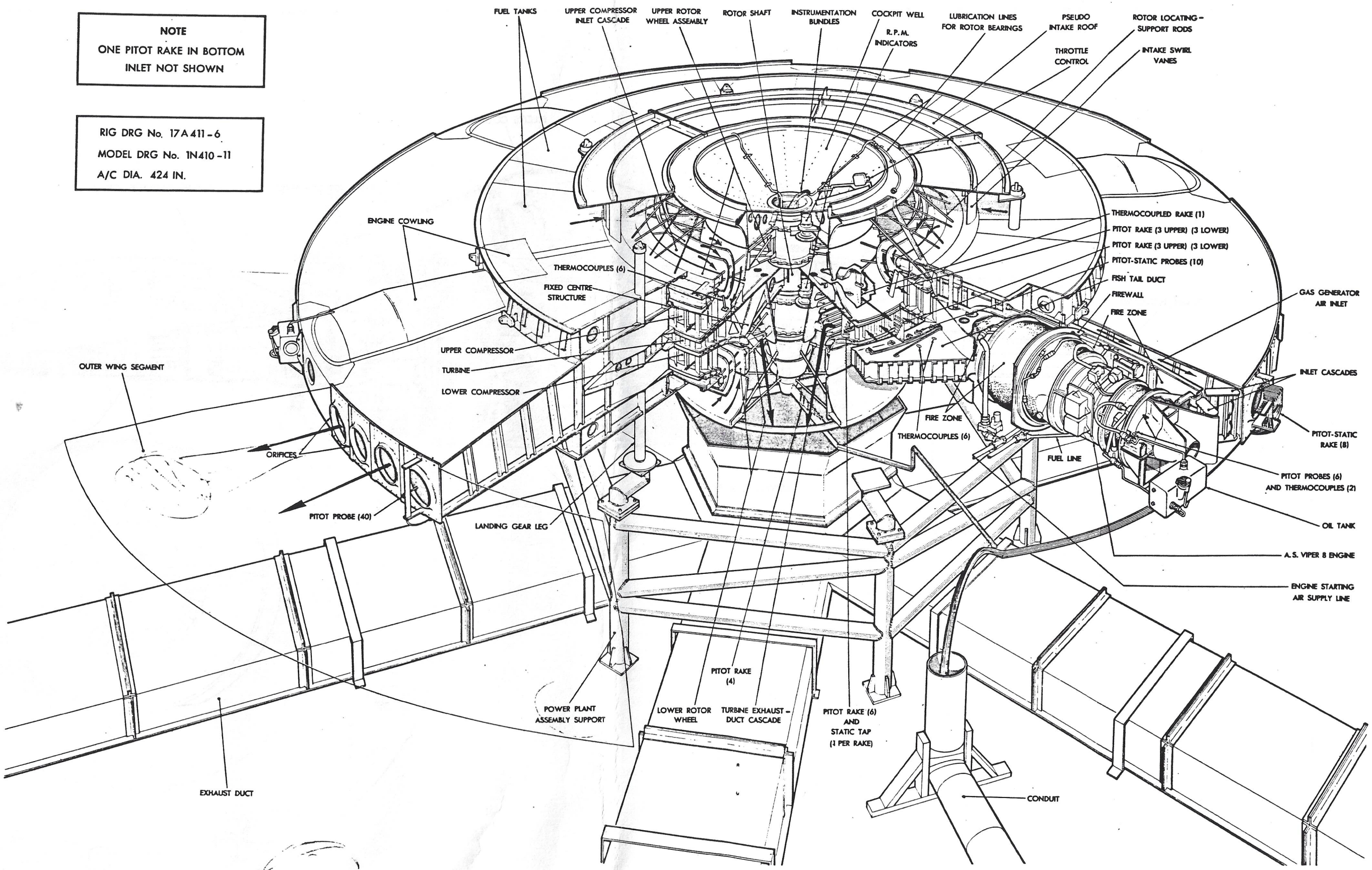

6-VIPER TEST RIG

2018-704-2

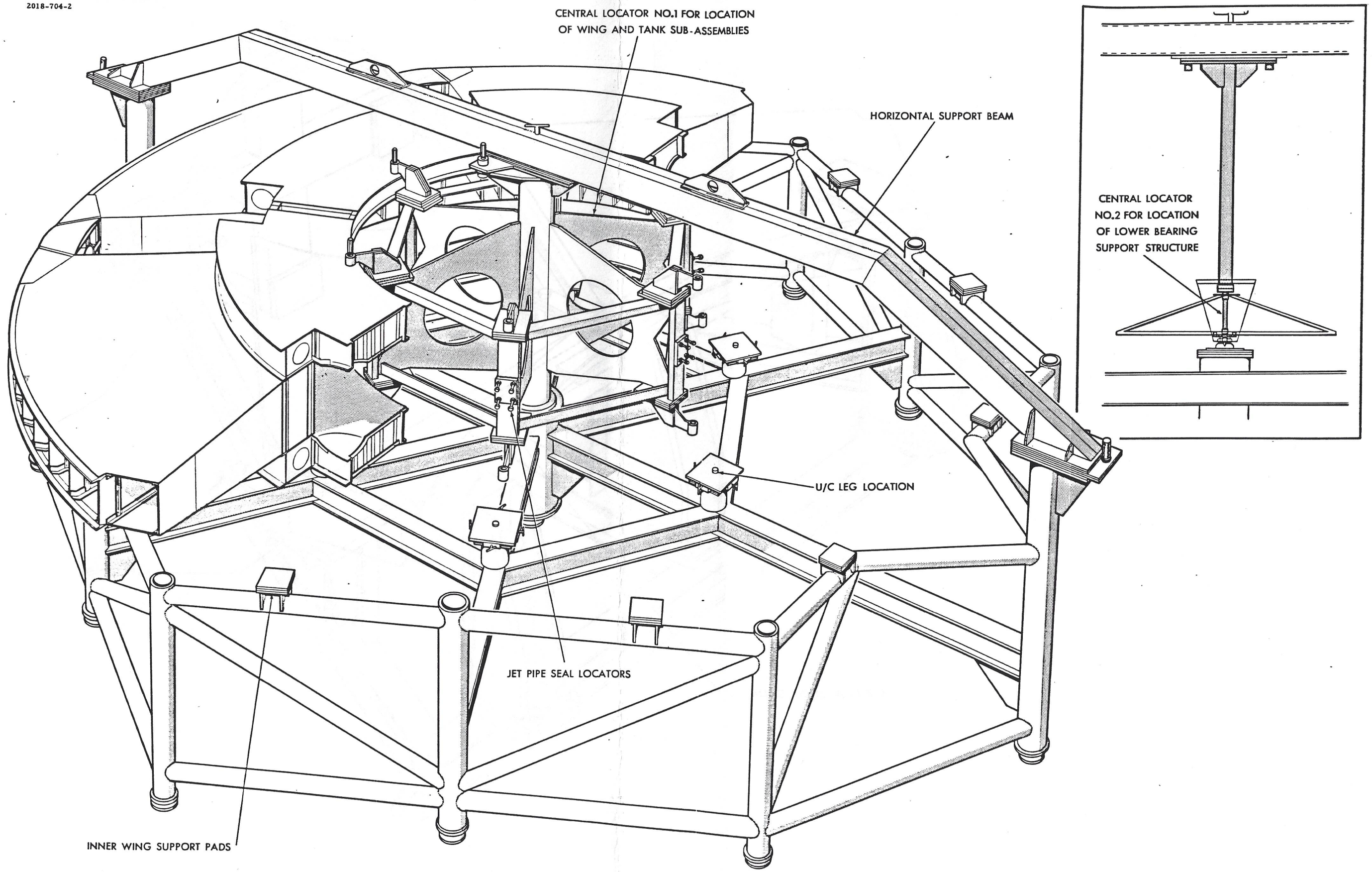

FIG. 44 AIRFRAME FINAL ASSEMBLY FIXTURE

2275-704-2

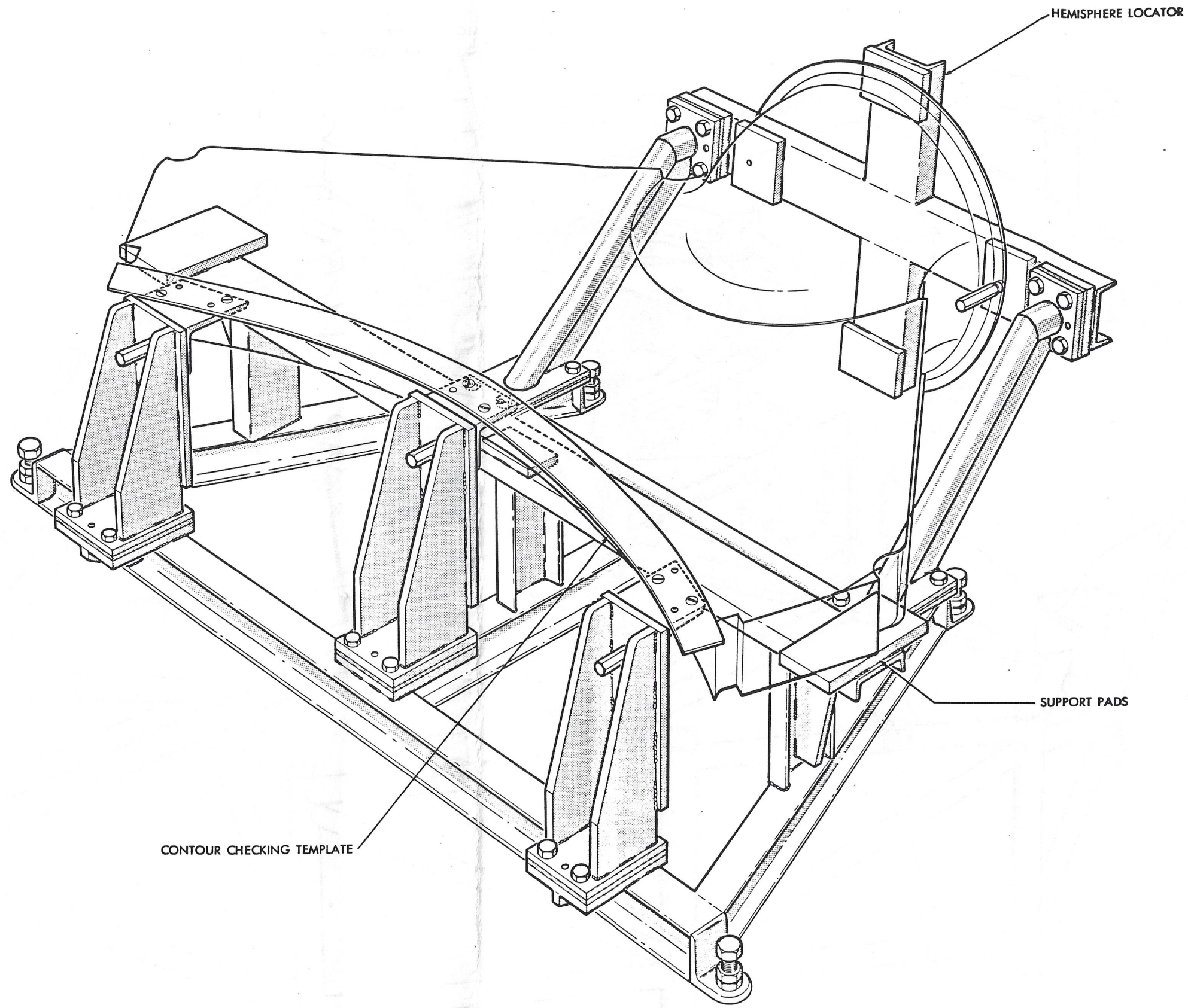

FIG. 32 JET PIPE ASSEMBLY FIXTURE

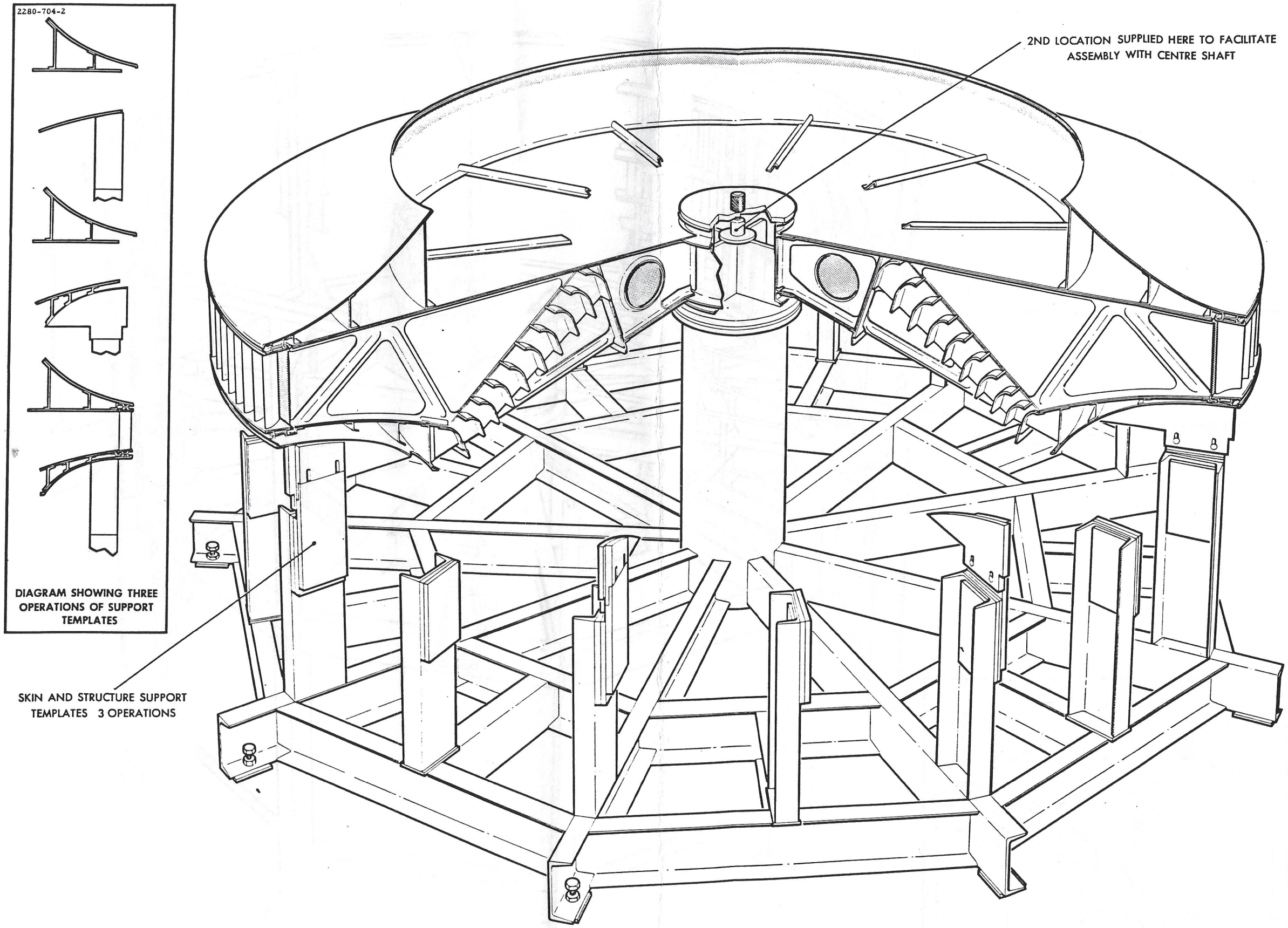

FIG. 15 ASSEMBLY JIG FOR TURBINE CENTRE STRUCTURE

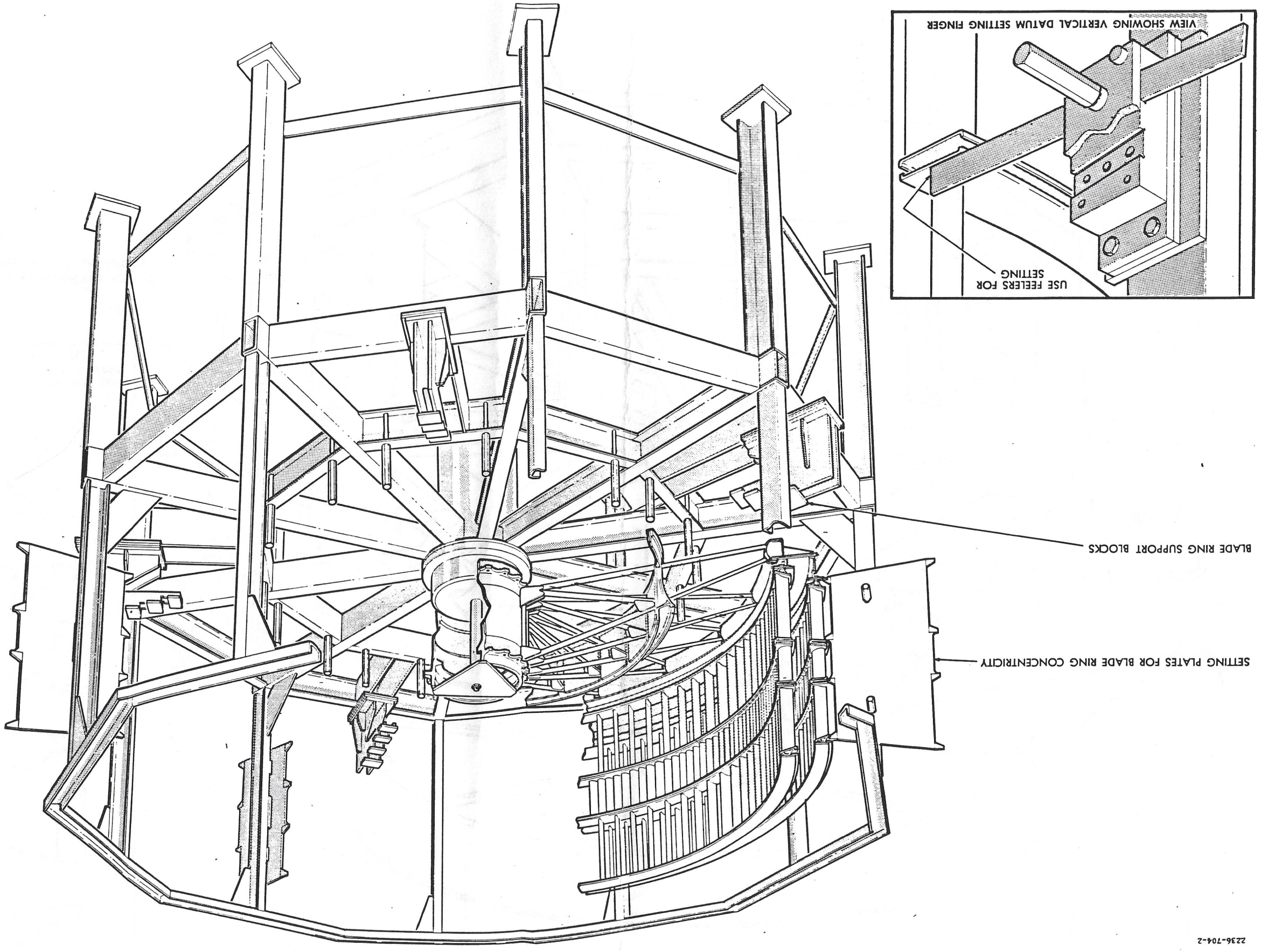

FIG. 16 ASSEMBLY JIG FOR UPPER AND LOWER ROTATING STRUCTURES

2236-704-2

2366-704-2

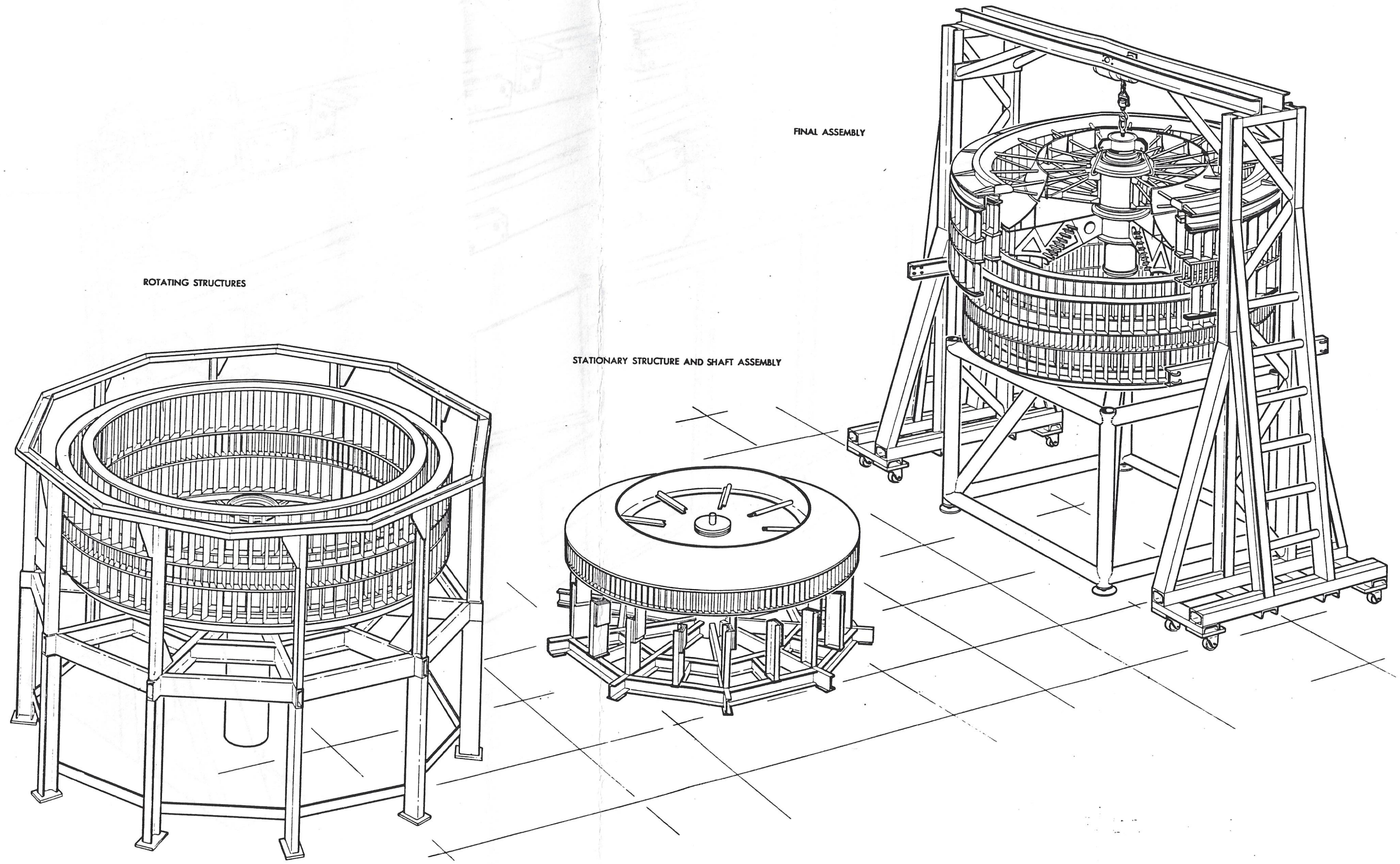

FIG. 17 TURBINE AND COMPRESSOR ASSEMBLY STAGES

2576-704-1

2281-704-2

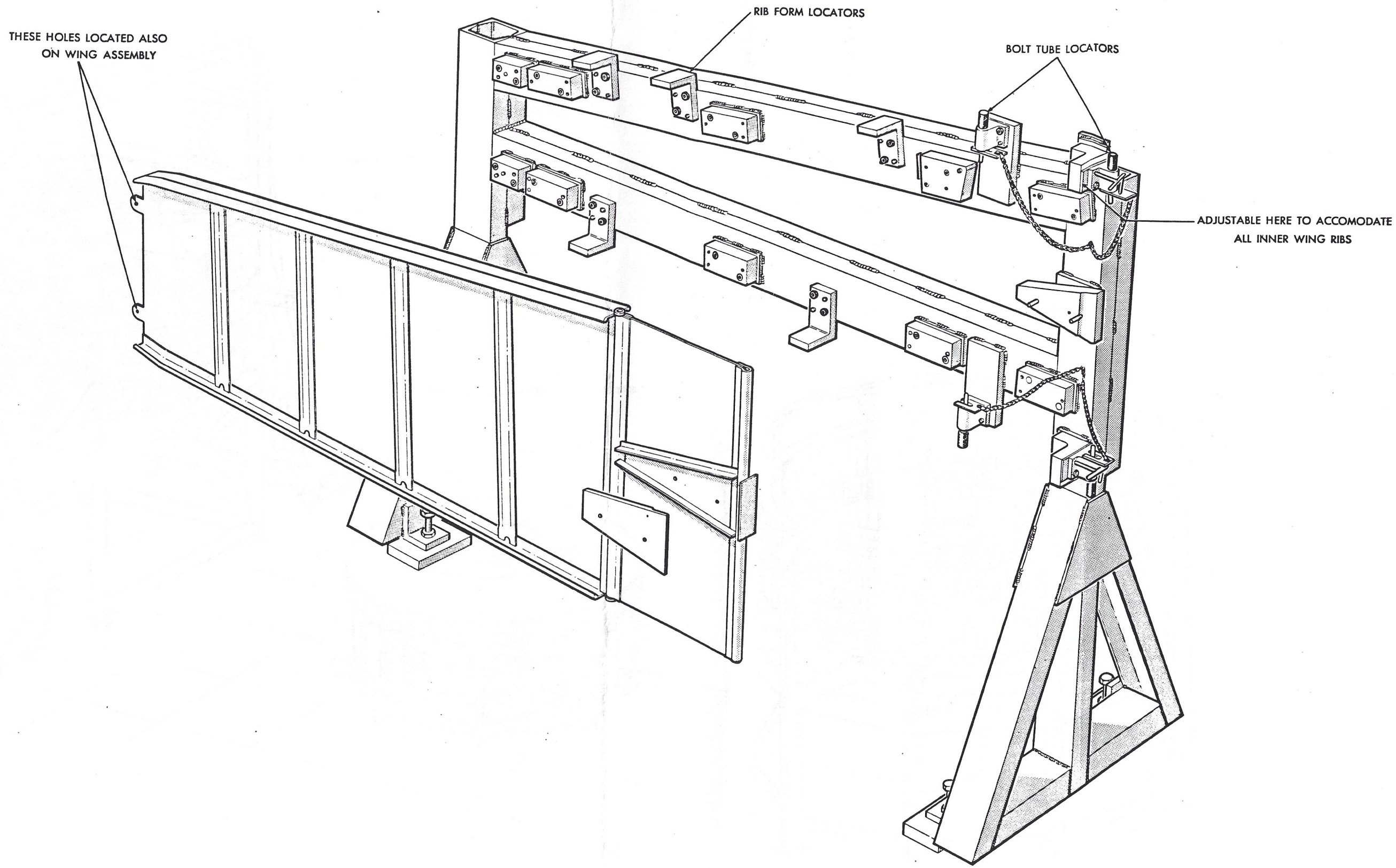

FIG. 25 ASSEMBLY JIG FOR INNER WING RIBS

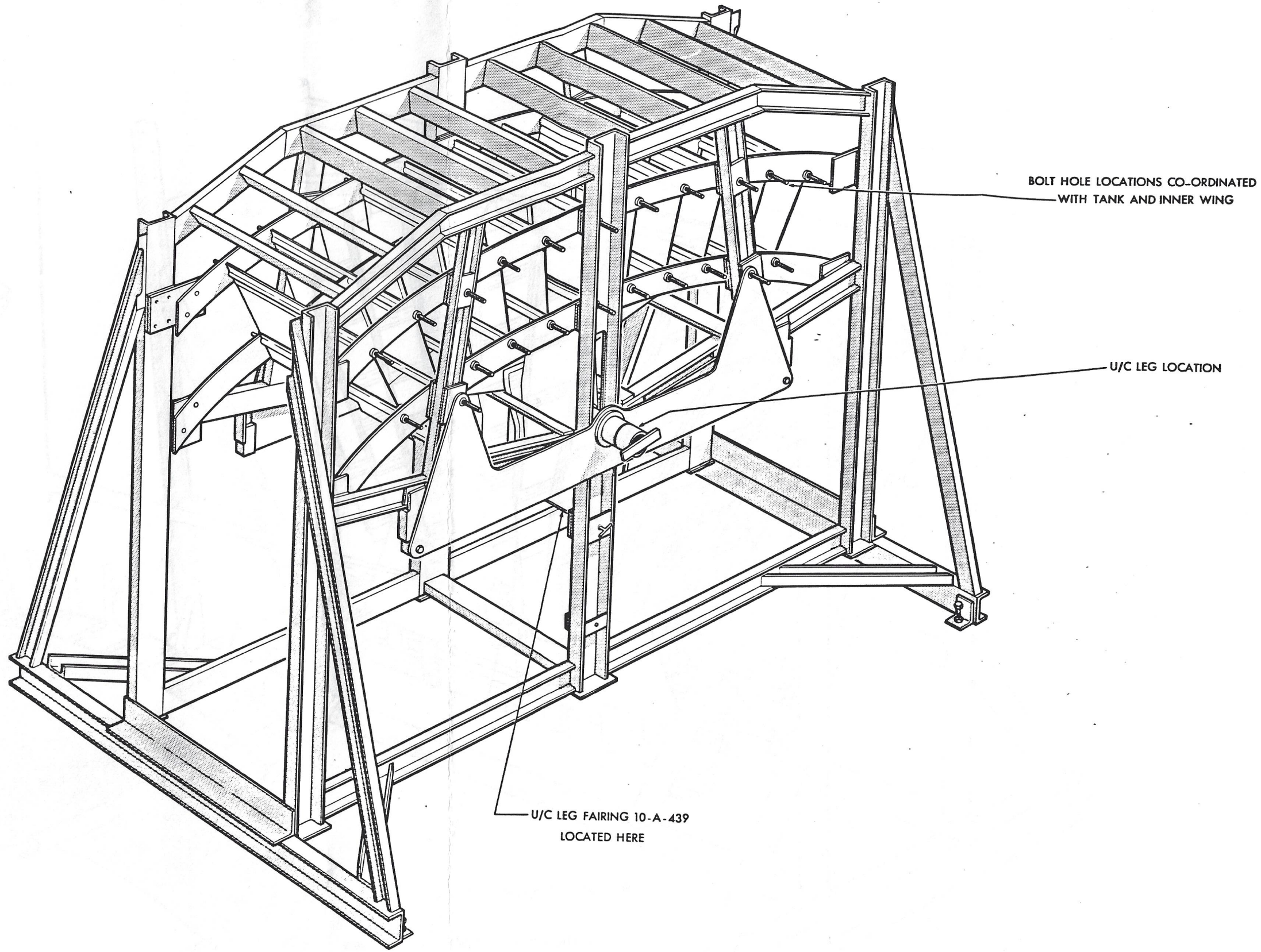

FIG.26 INNER WING FAIRING ASSEMBLY JIG

2278-704-2

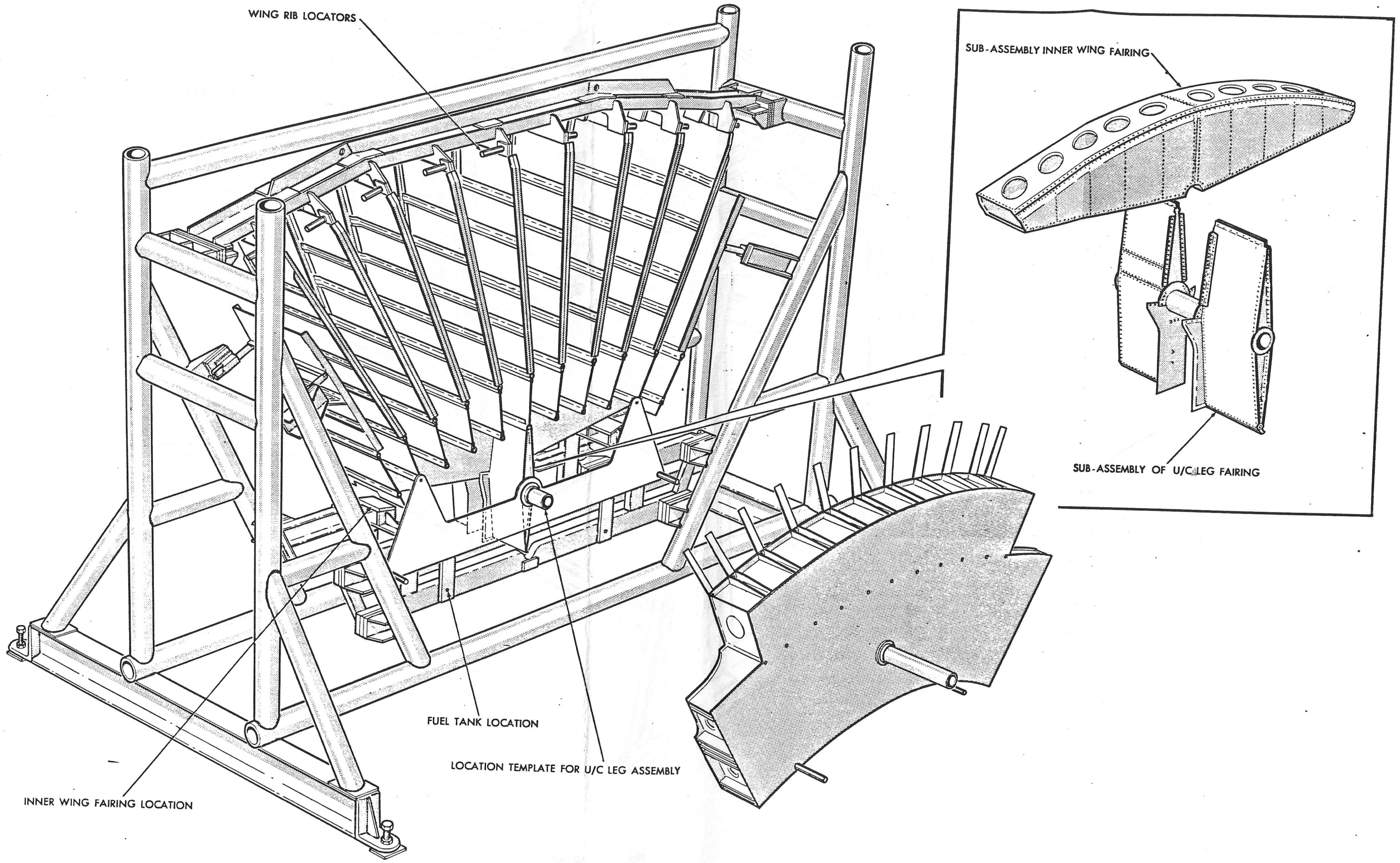

FIG. 27 FINAL ASSEMBLY FIXTURE FOR INNER WING SEGMENT

2236-704-2

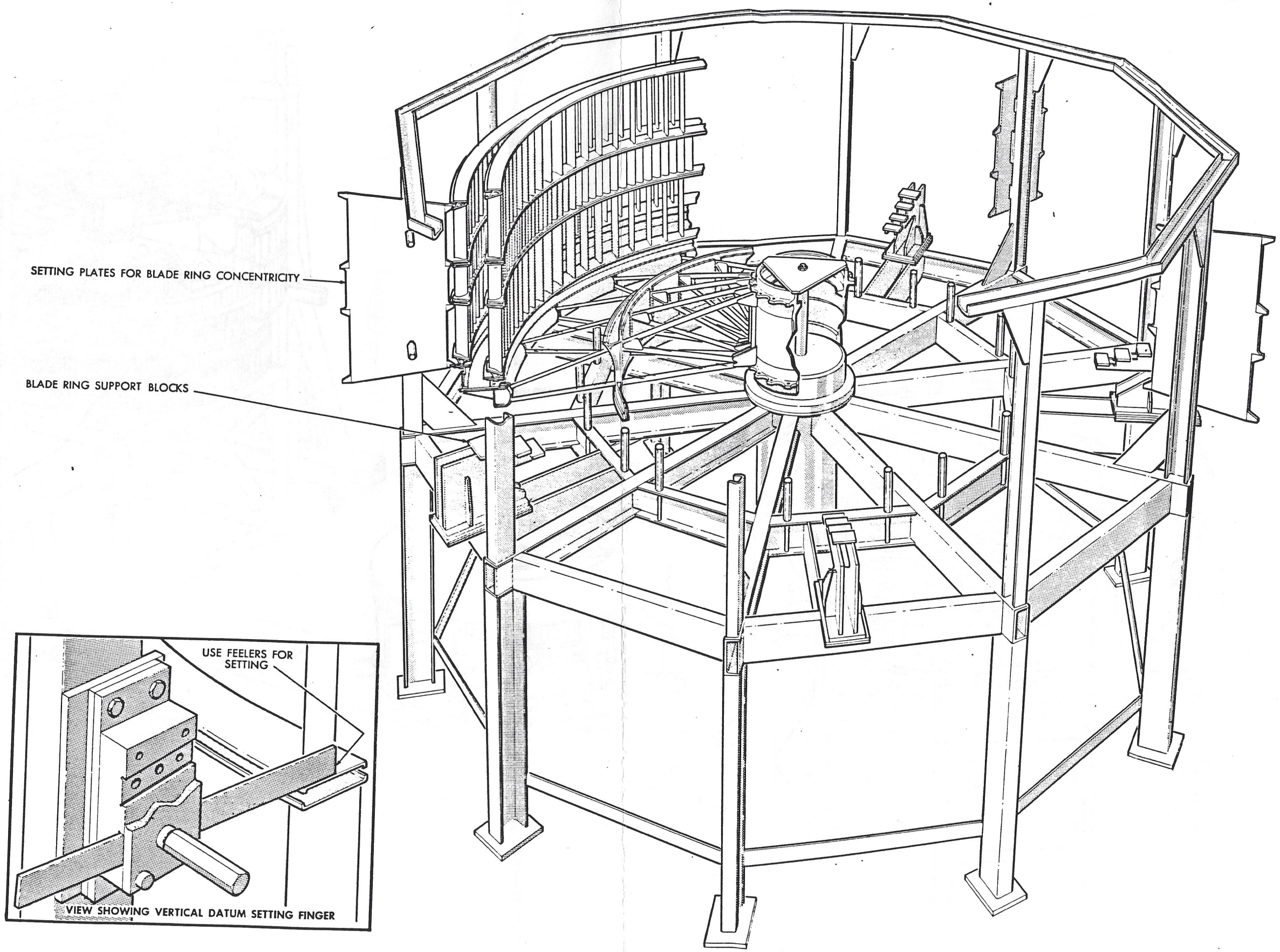

FIG. 16 ASSEMBLY JIG FOR UPPER AND LOWER ROTATING STRUCTURES

2366-704-2

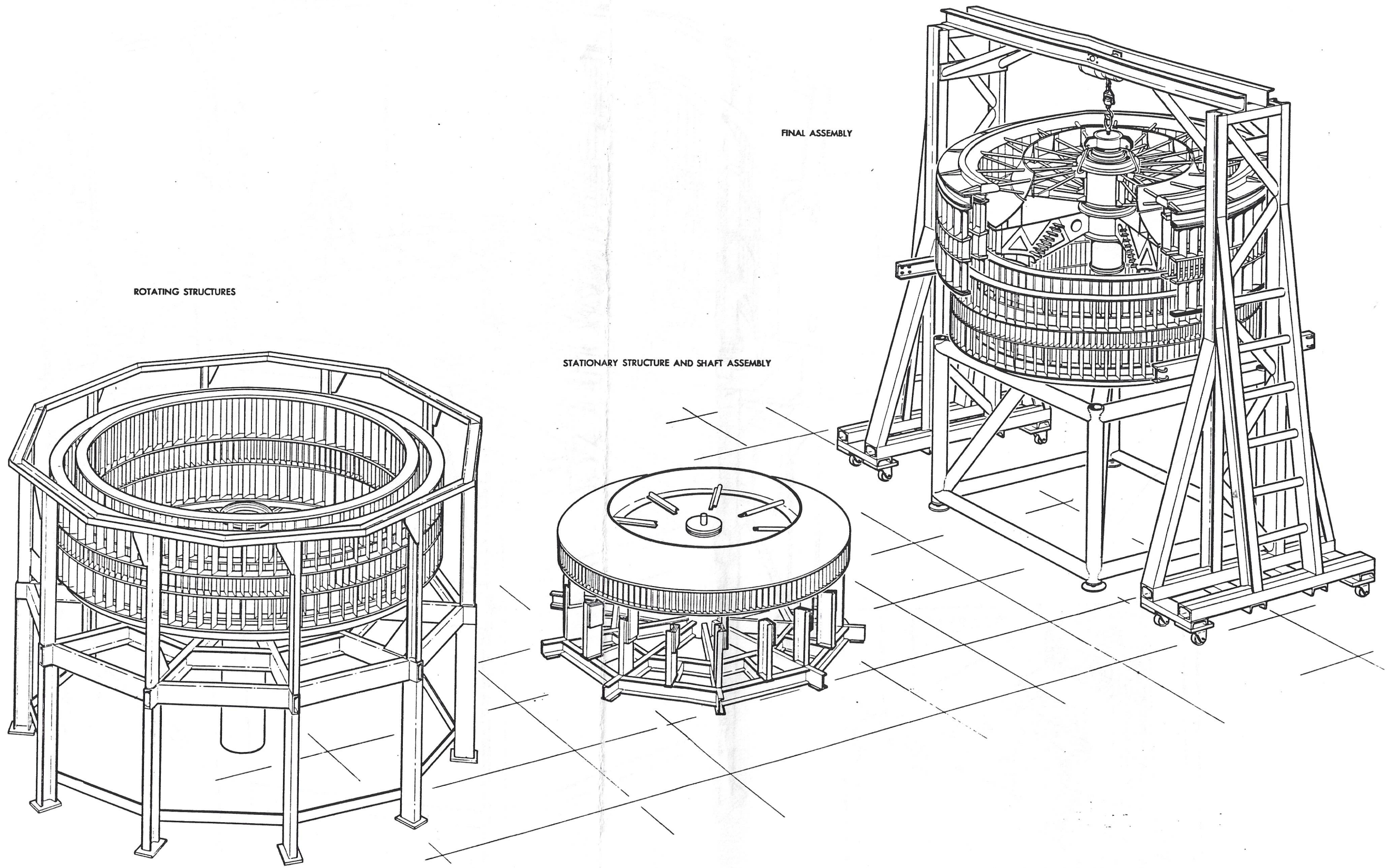

FIG. 17 TURBINE AND COMPRESSOR ASSEMBLY STAGES

2571-704-1

2278-704-2

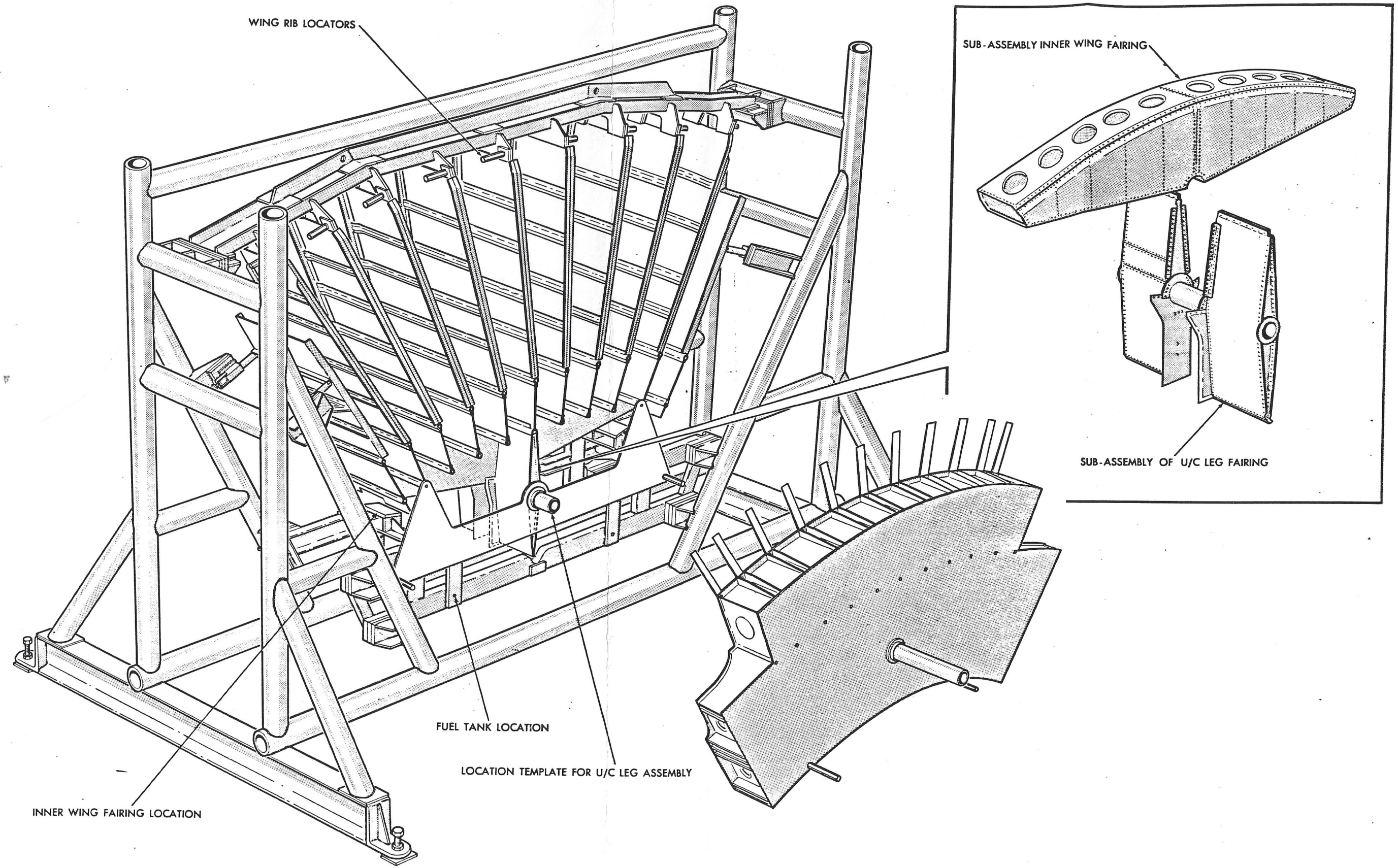

FIG. 27 FINAL ASSEMBLY FIXTURE FOR INNER WING SEGMENT

2277-704-2

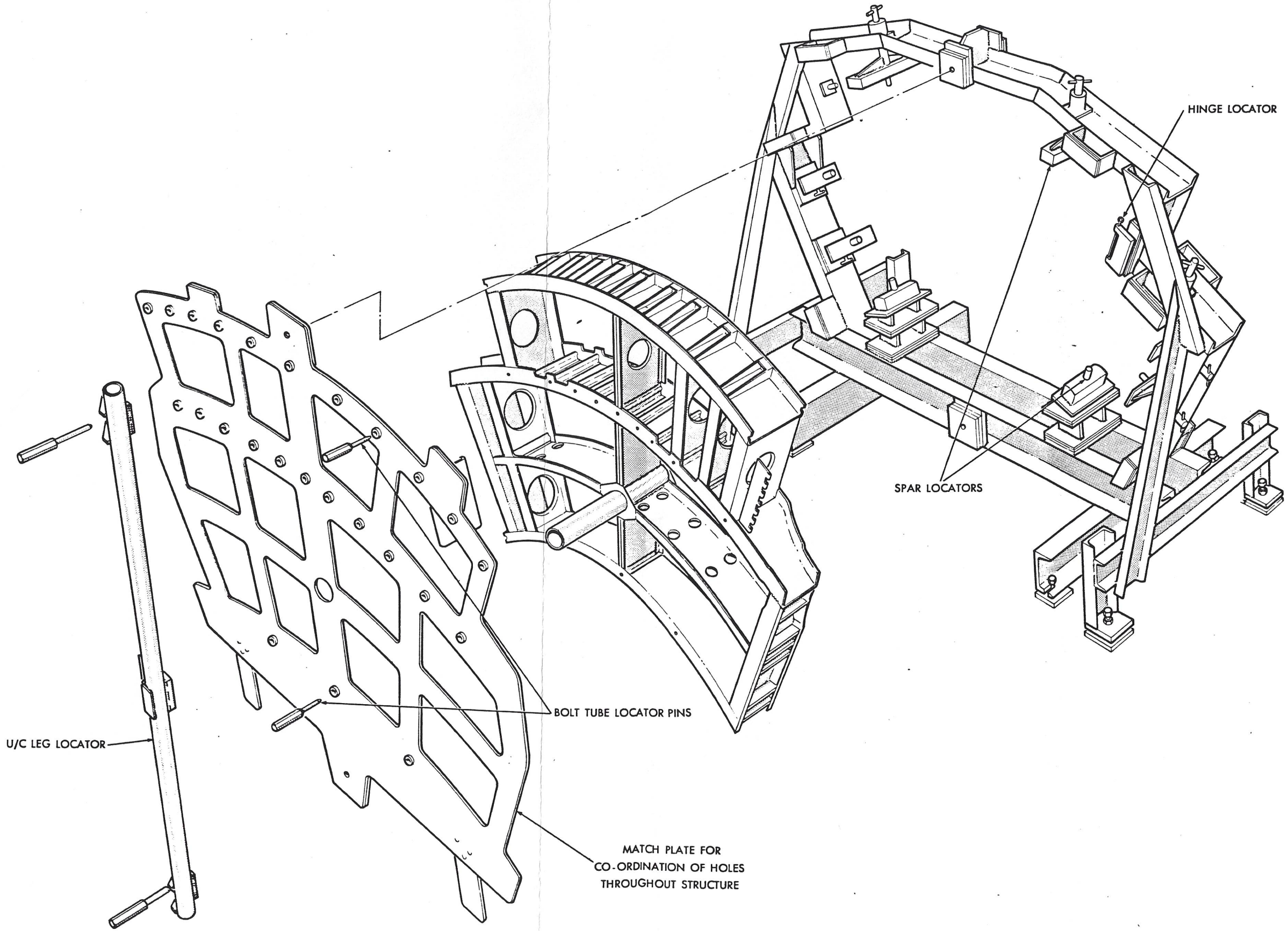

FIG. 20 ASSEMBLY JIG FOR UPPER AND LOWER FUEL TANKS

2275-704-2

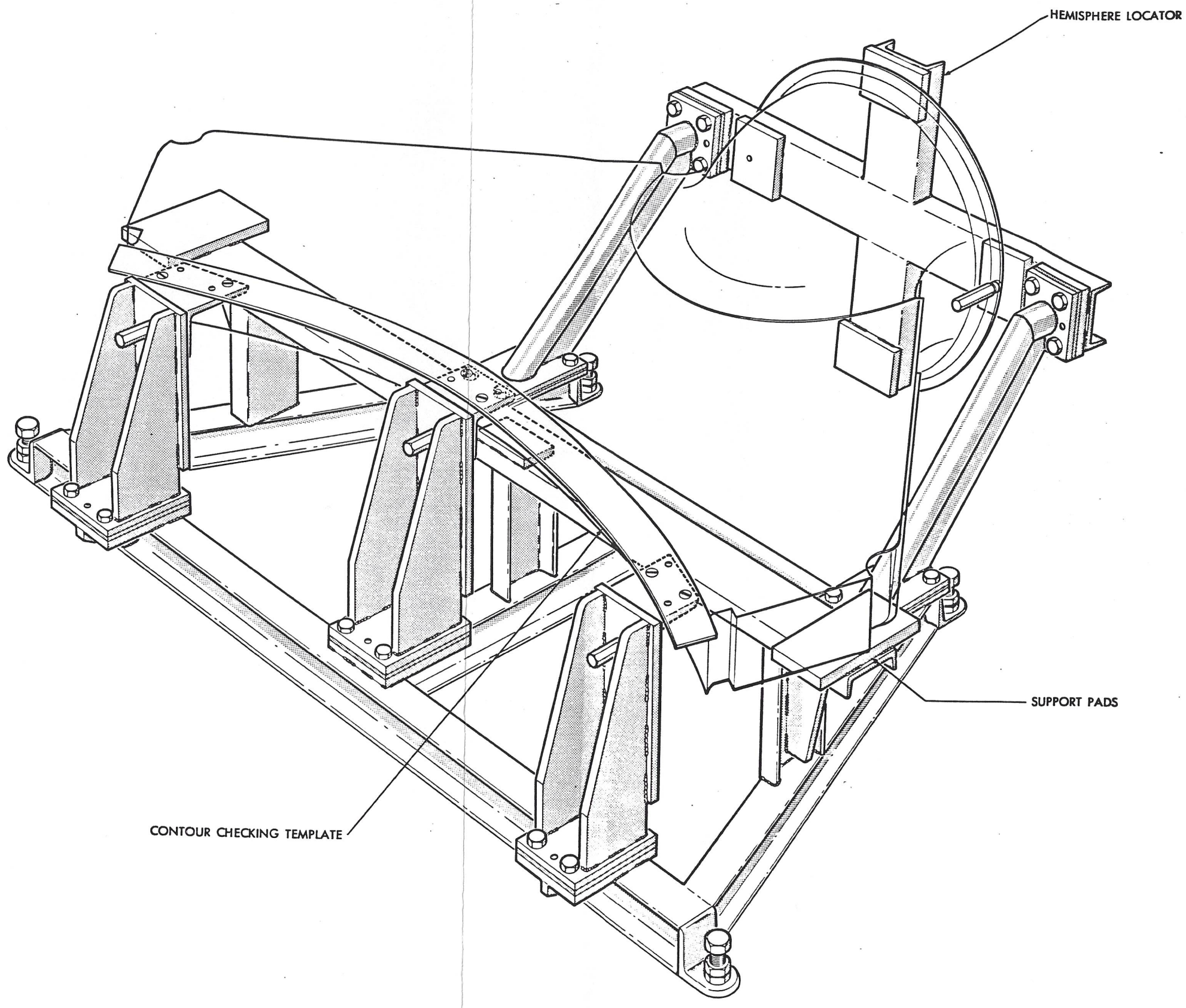

FIG. 32 JET PIPE ASSEMBLY FIXTURE

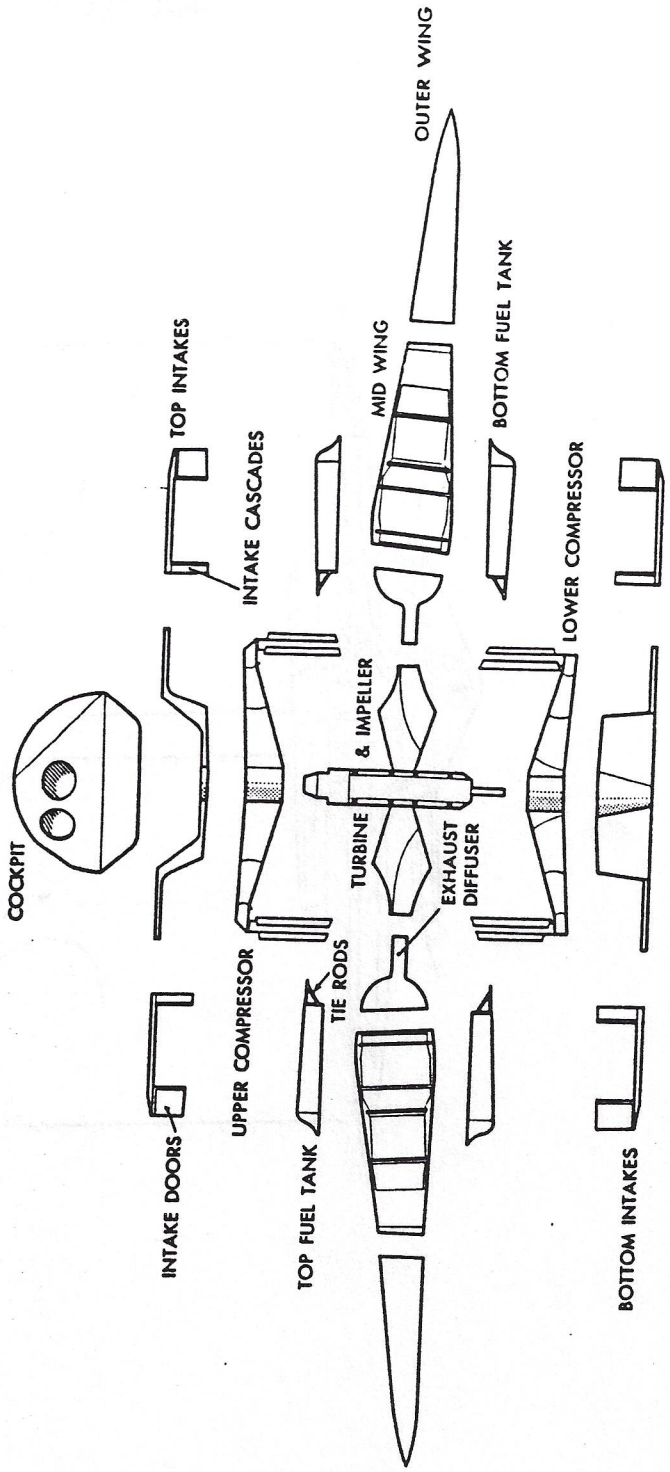

FIG. 7 . AIRCRAFT STRUCTURE BREAKDOWN

UNCLASSIFIED [redacted]

C6-110479

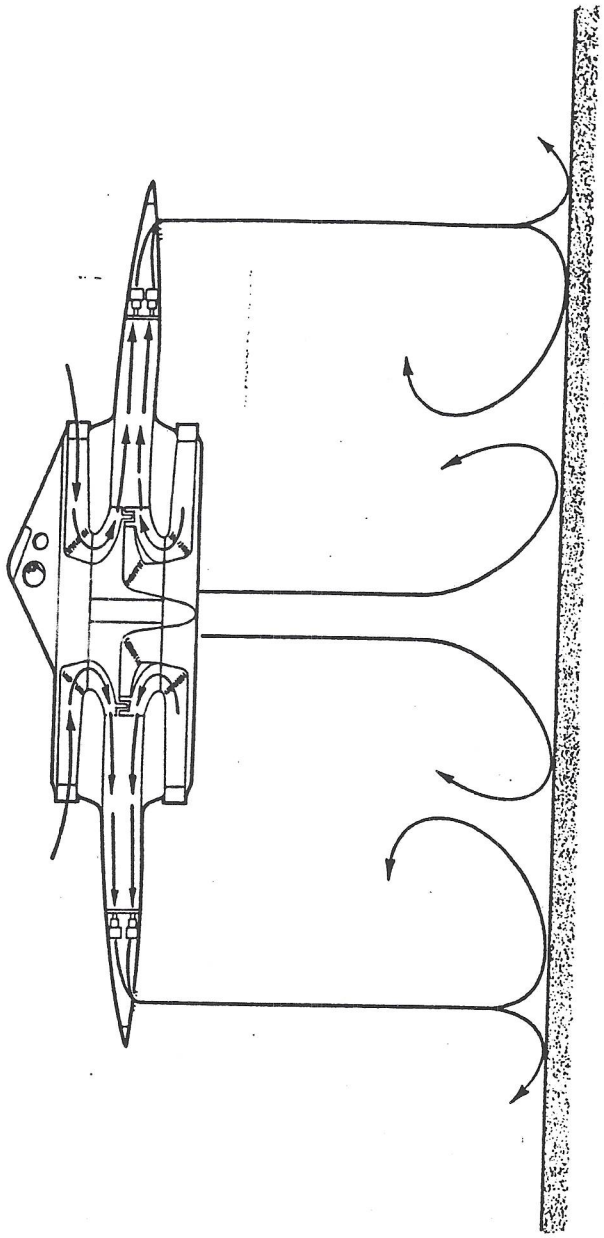

FIG. 6 GROUND CUSHION EFFECT

[redacted]

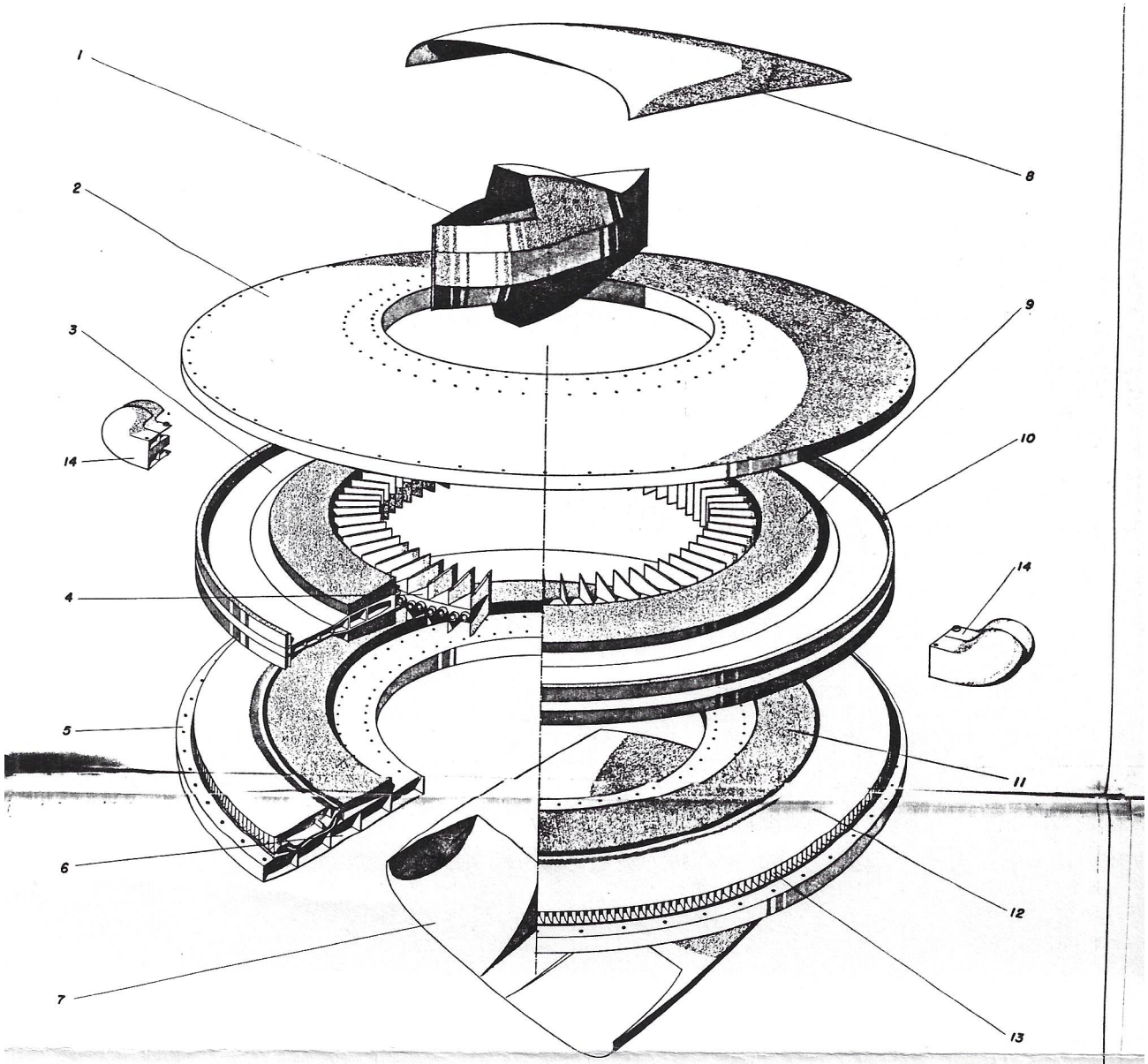

1· COCKPIT
2· TOP STRUCTURAL UNIT
3· ROTOR UNIT
4· BEARING RING
5· BOTTOM STRUCTURAL UNIT
6· INTEGRAL FUEL TANK
7· BOTTOM INTAKE SHELL
8· TOP INTAKE SHELL
9· COMPRESSOR ROTOR BLADES
10· TURBINE BLADES
11· COMPRESSOR STATOR BLADES
12· BOTTOM COMBUSTOR
13· NOZZLE GUIDE VANES
14· EXHAUST NOZZLE

—A.V. ROE CANADA LTD.— MALTON ONTARIO		
BASIC STRUCTURE EXPLODED VIEW		
DRAWN BY	DATE	DRAWING NO.
McCook	MAY 11, 1953	SK 21146

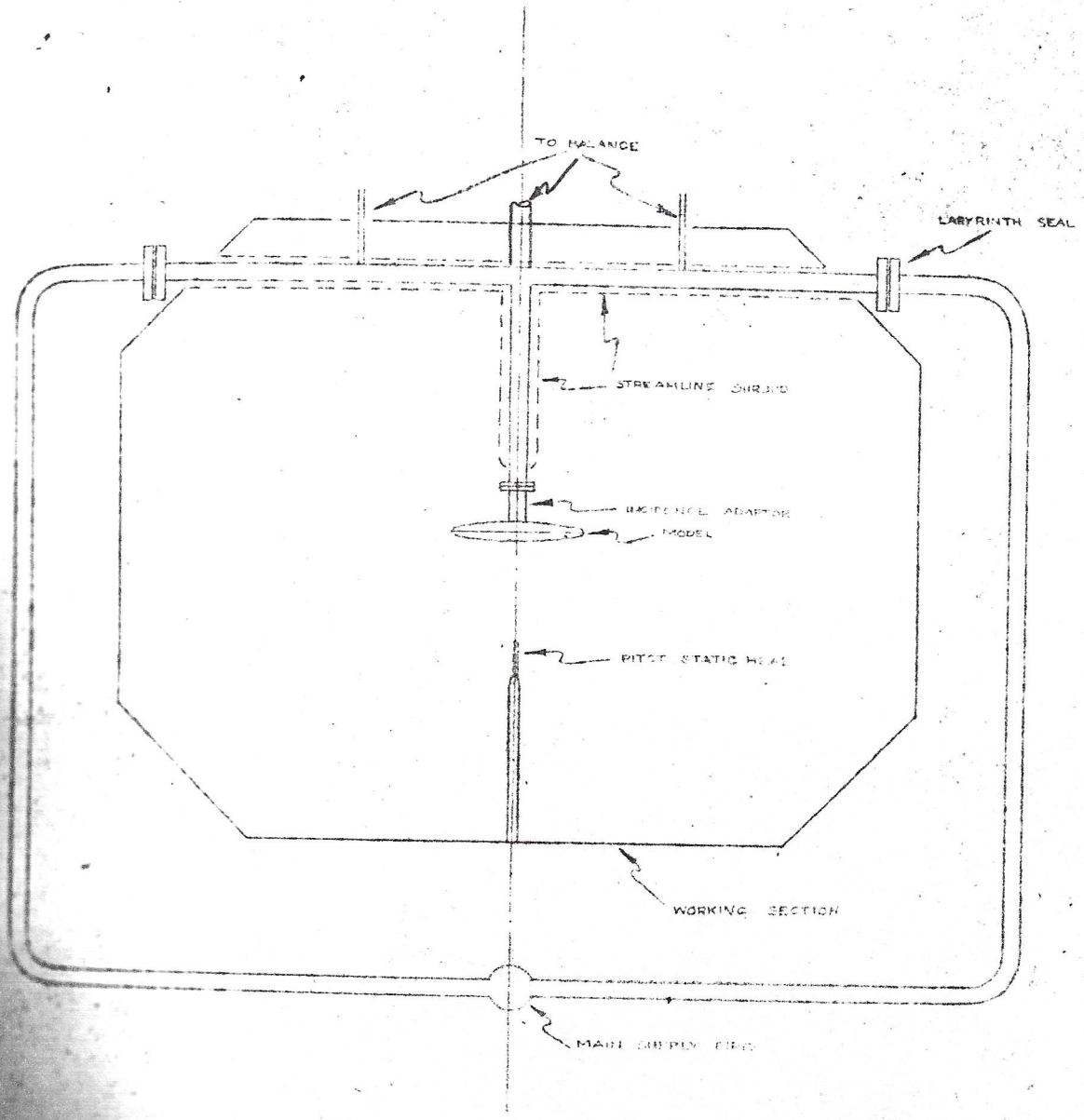

DISPOSITION OF THE MODEL AND AIR SUPPLY PIPES RELATIVE TO THE WORKING SECTION

52

FIG 3.1.

APPENDIX "A"

AVRO PU704 VEHICLE

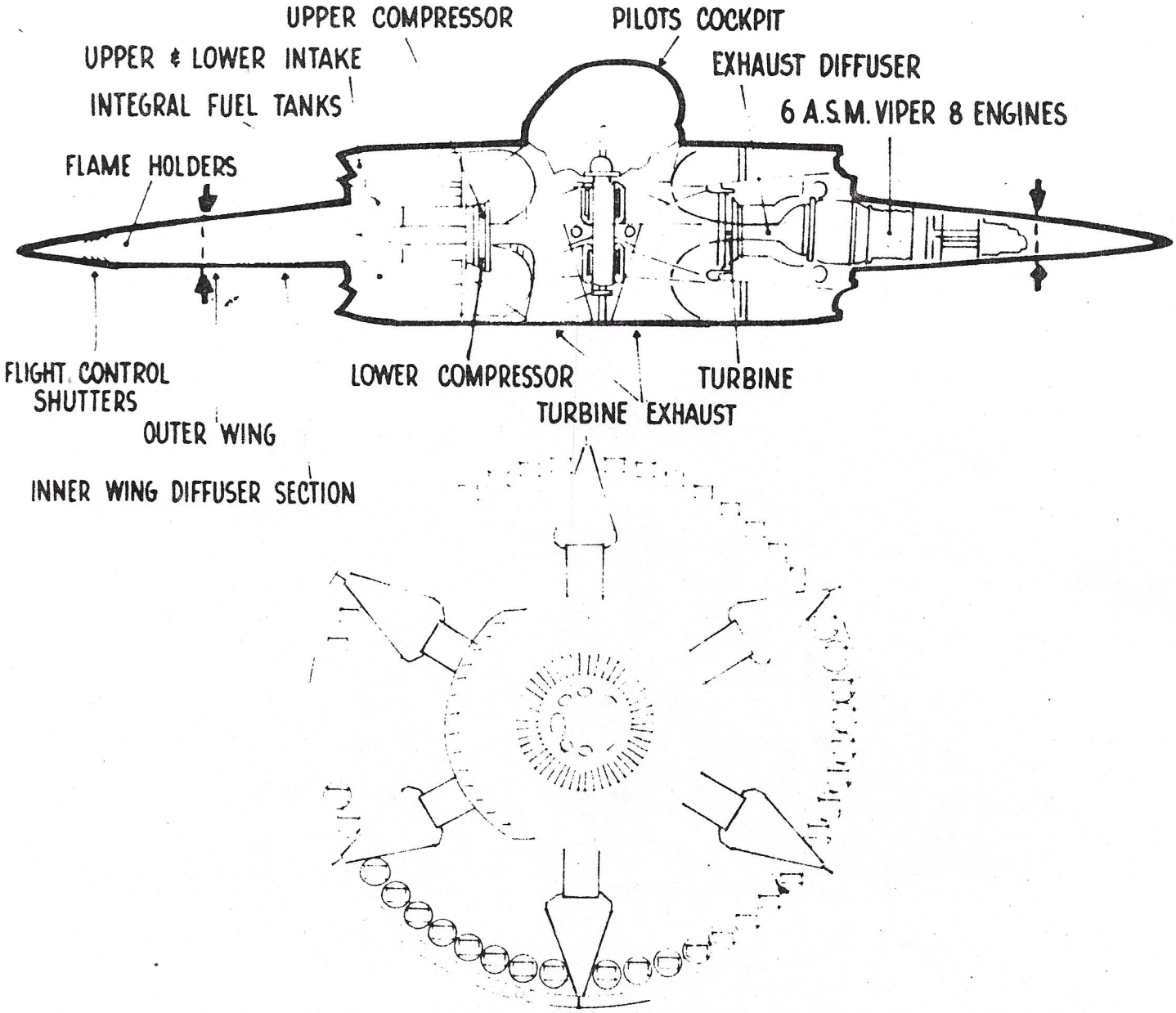

SECRET

APPENDIX "B"

SECRET

AVRO CAR

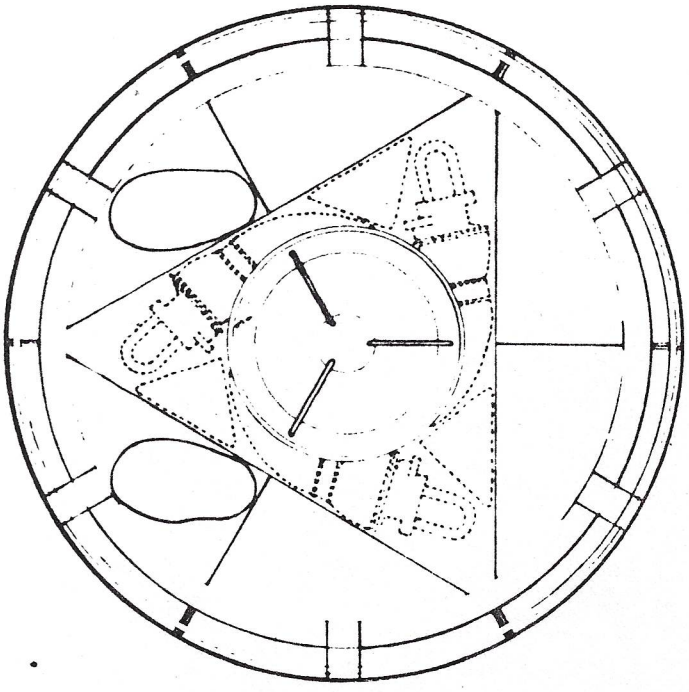

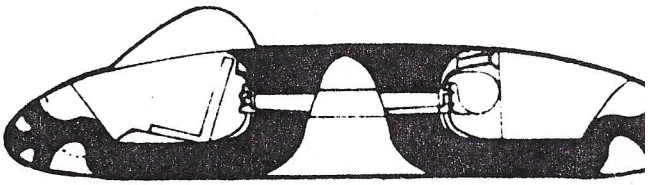

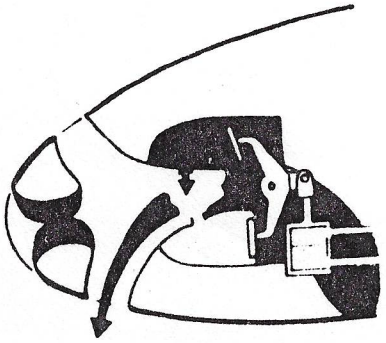

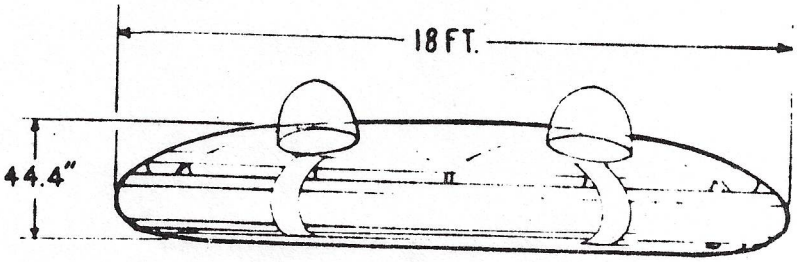

SECRET

APPENDIX "C"

ENGINE INSTALLATION

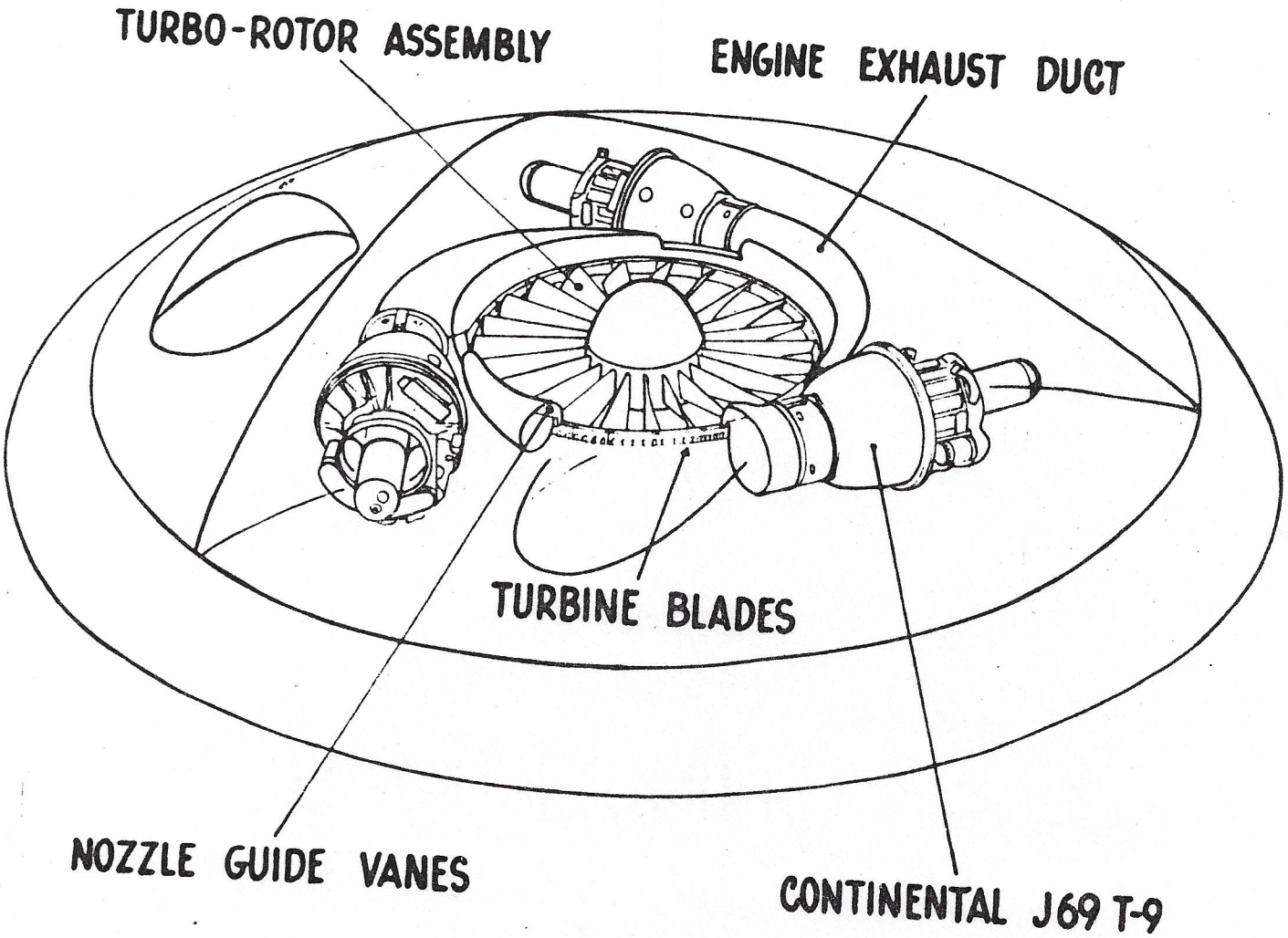

APPENDIX "D"

RECOMMENDED INTEGRATED USAF/ARMY PROGRAM

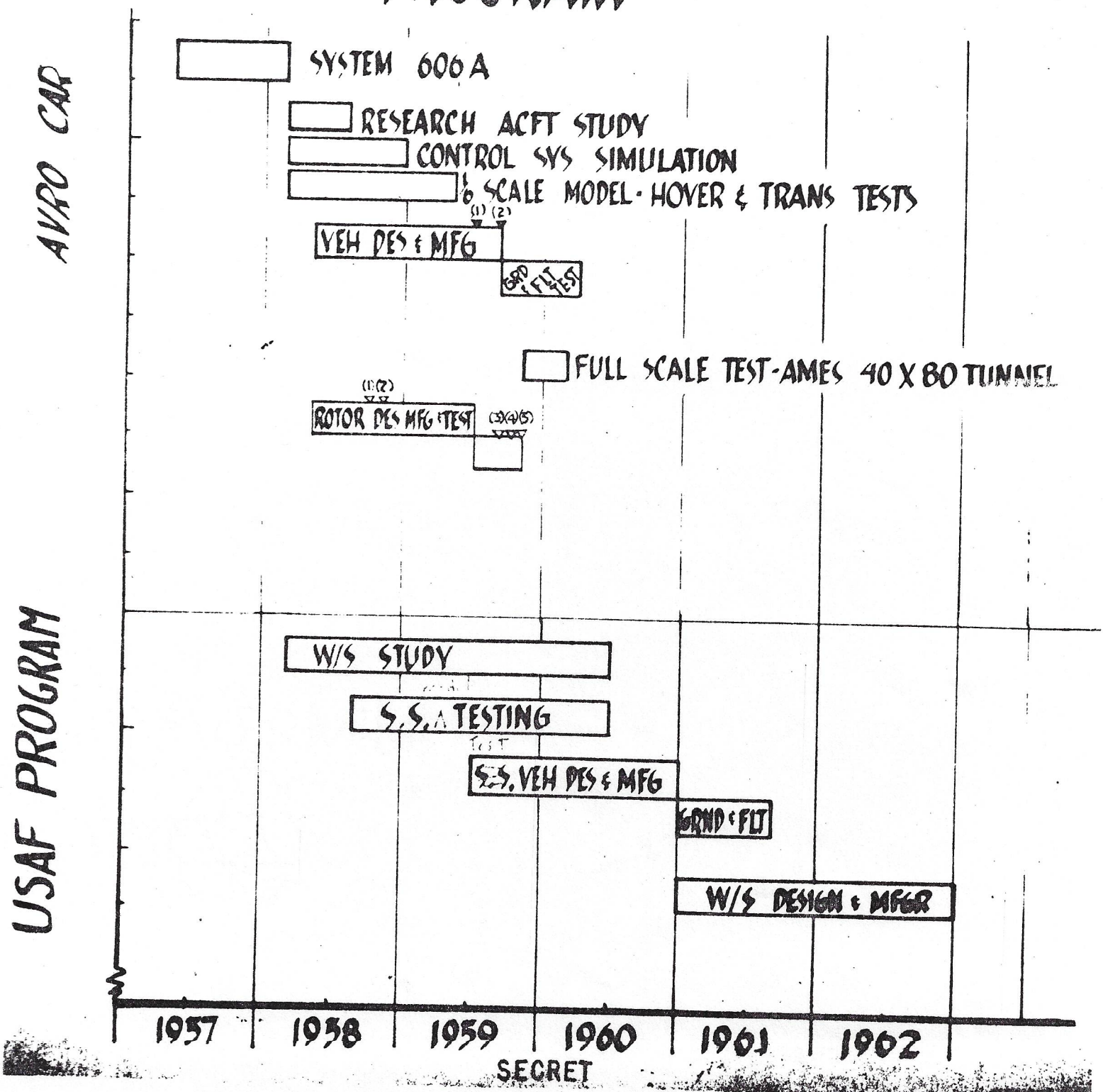

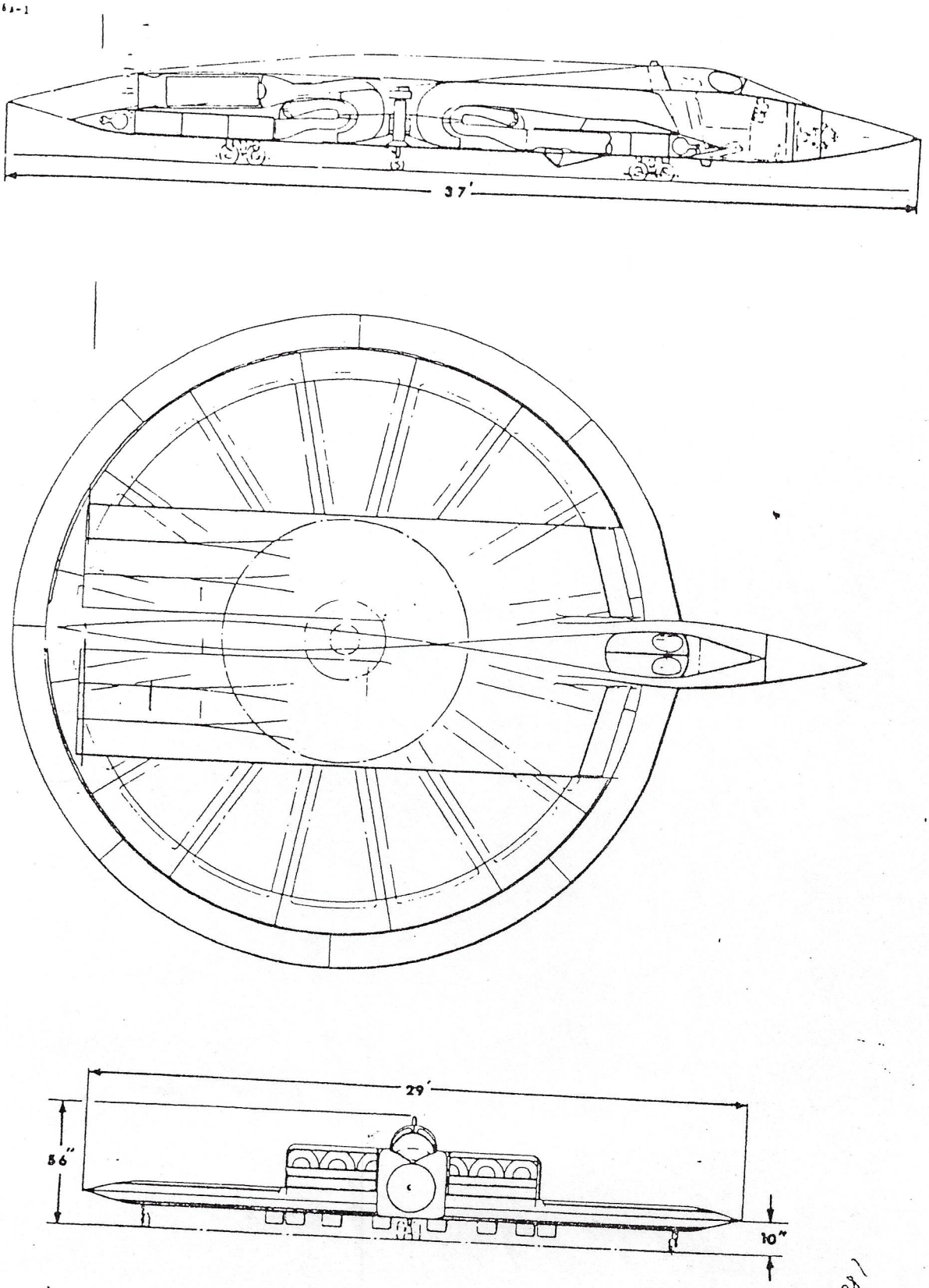

FIG. 8 FIGHTER - BOMBER WITH RADIAL ENGINE

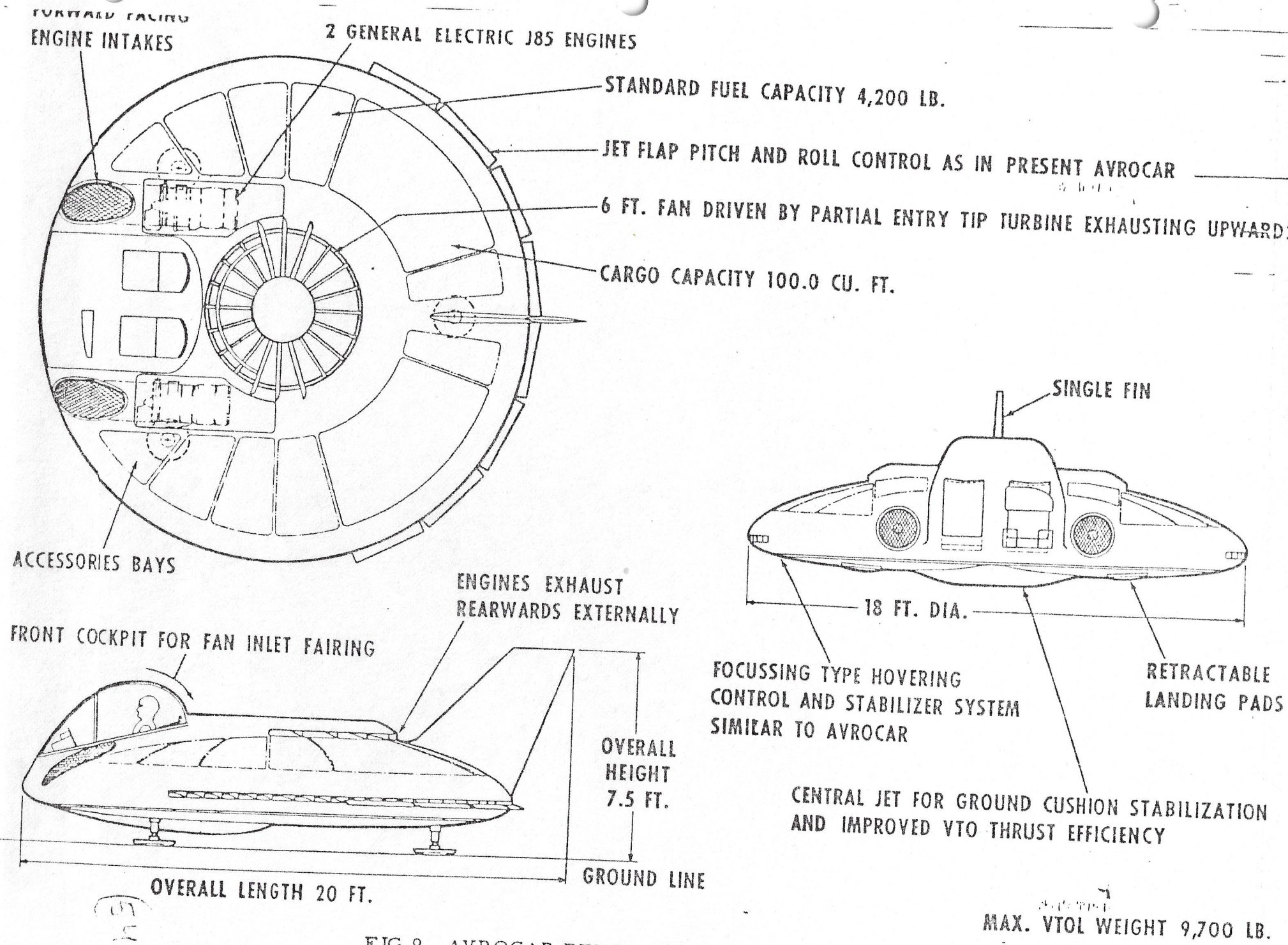

FIG 9 AVROCAR DEVELOPMENT 2 J85 ENGINES

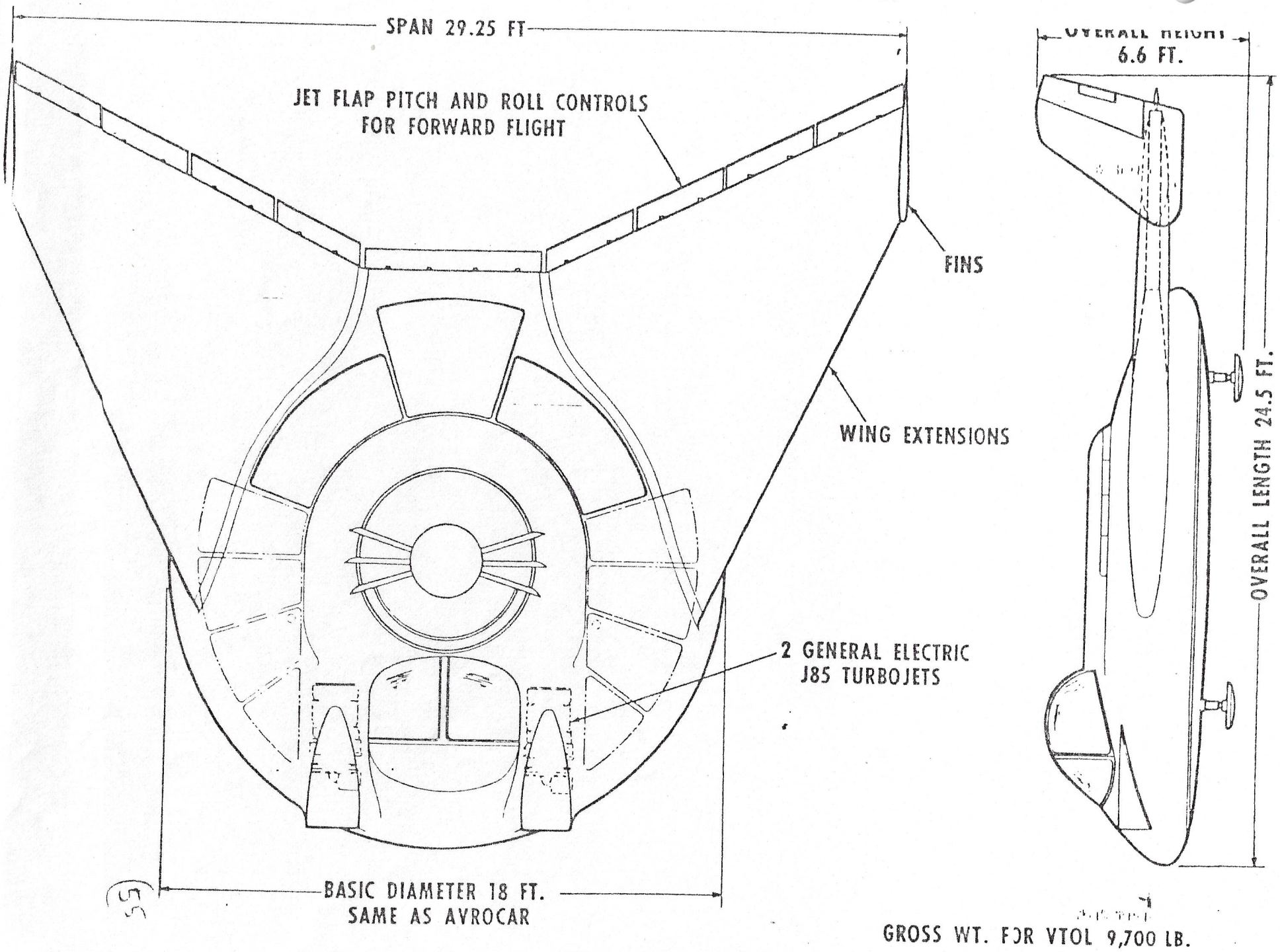

FIG 10 AVROCAR DEVELOPMENT VERSION WITH WING EXTENSIONS

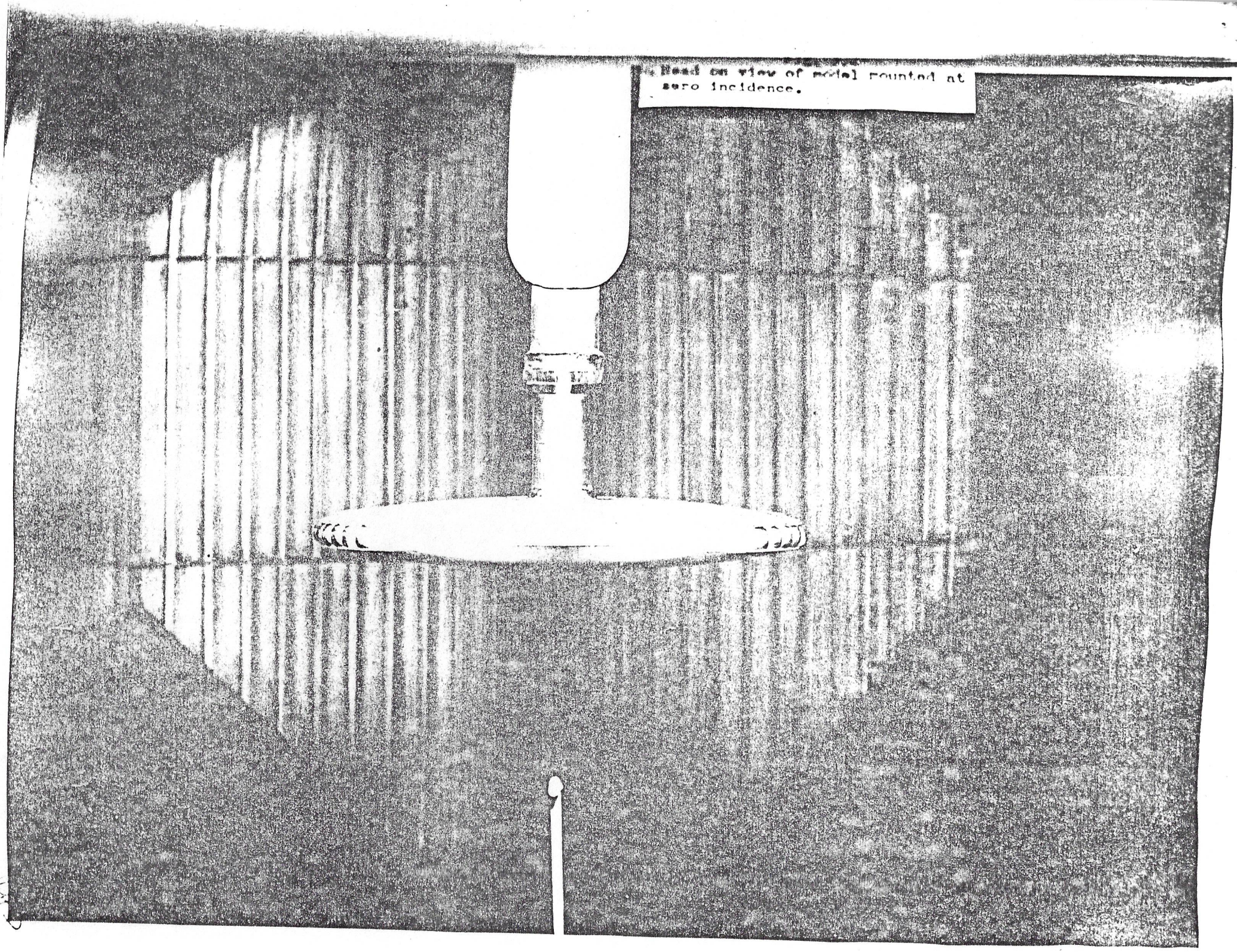

Head on view of model mounted at zero incidence.

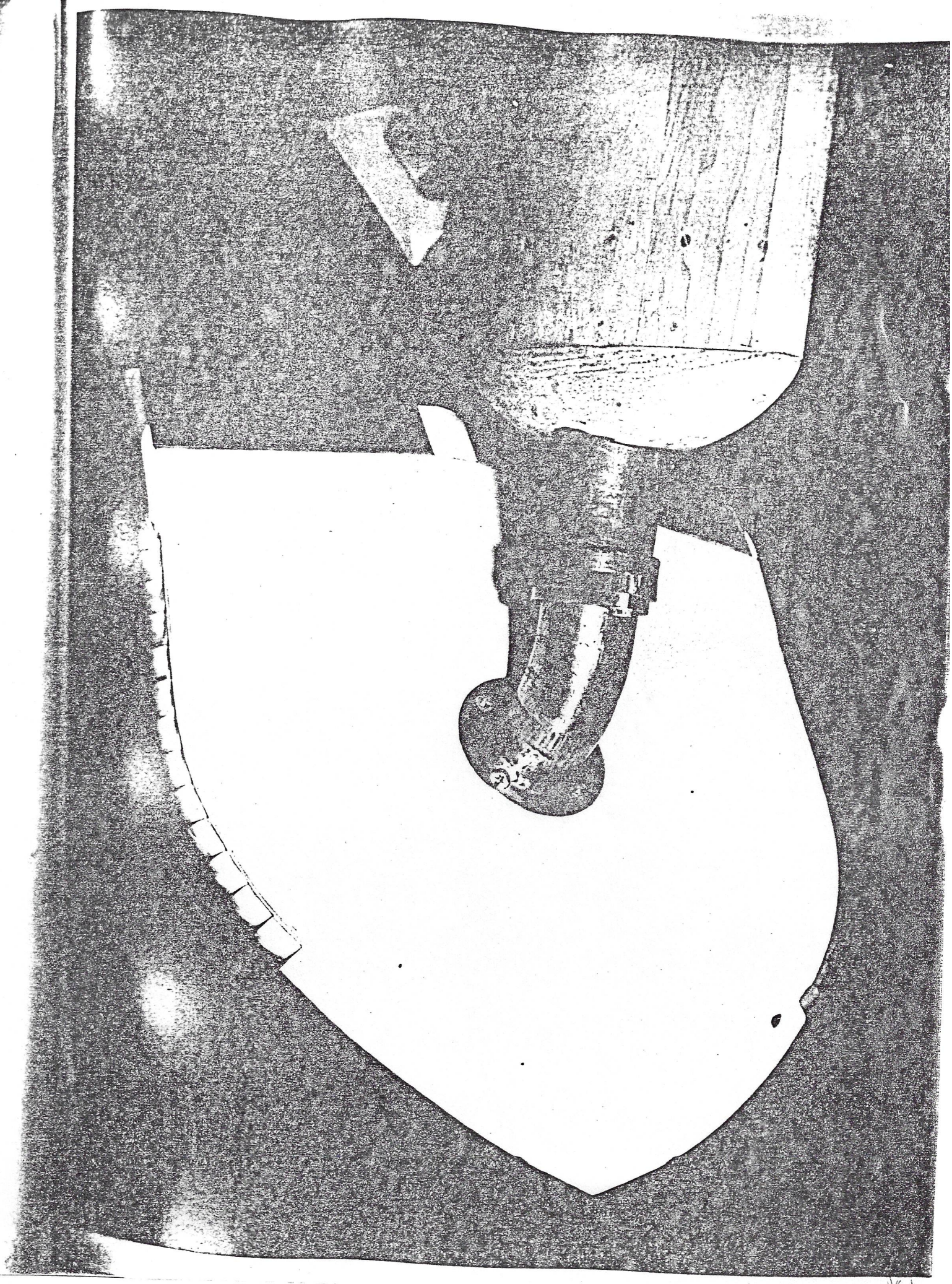

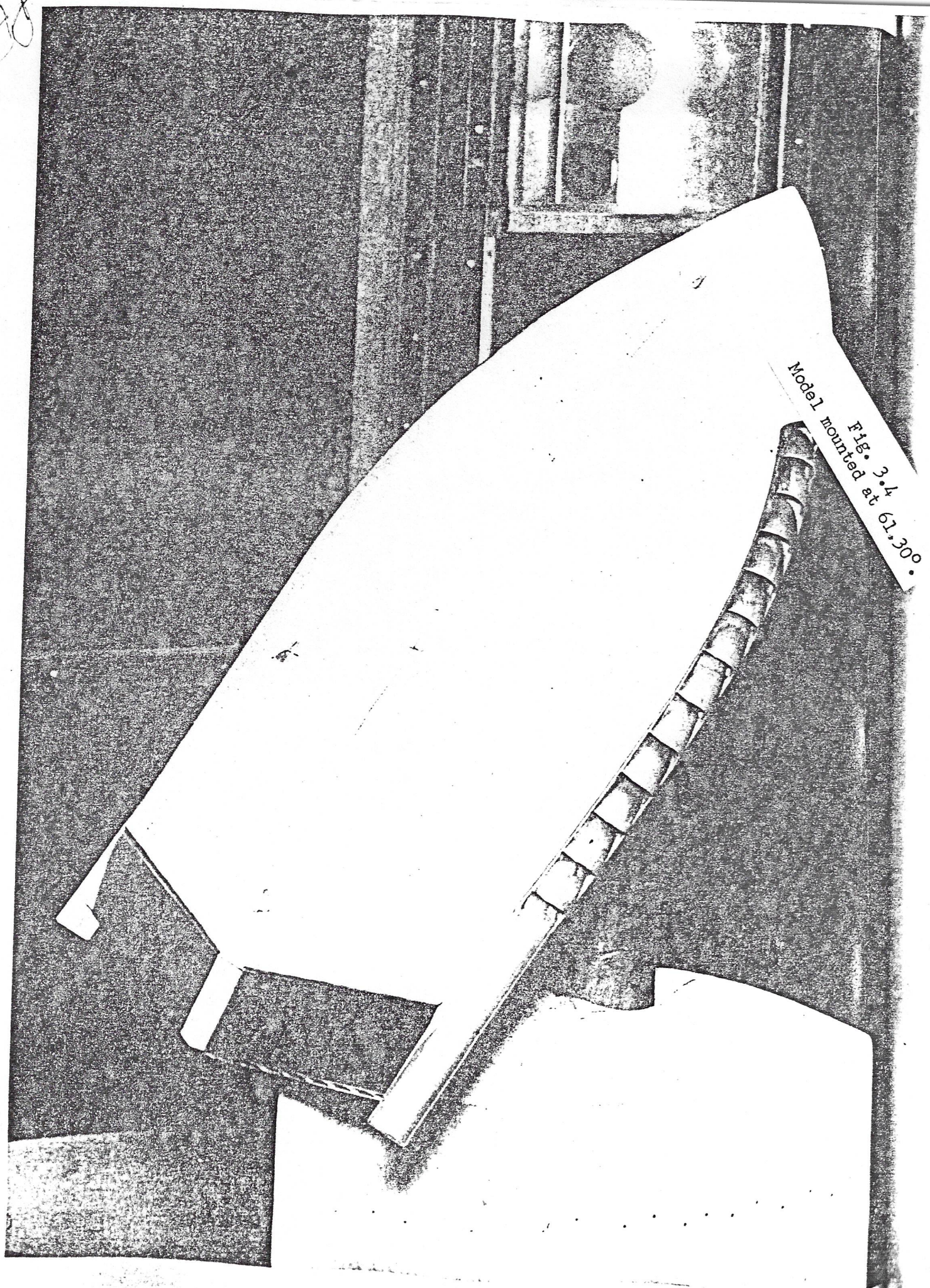

Fig. 3.4
Model mounted at 61.30°.

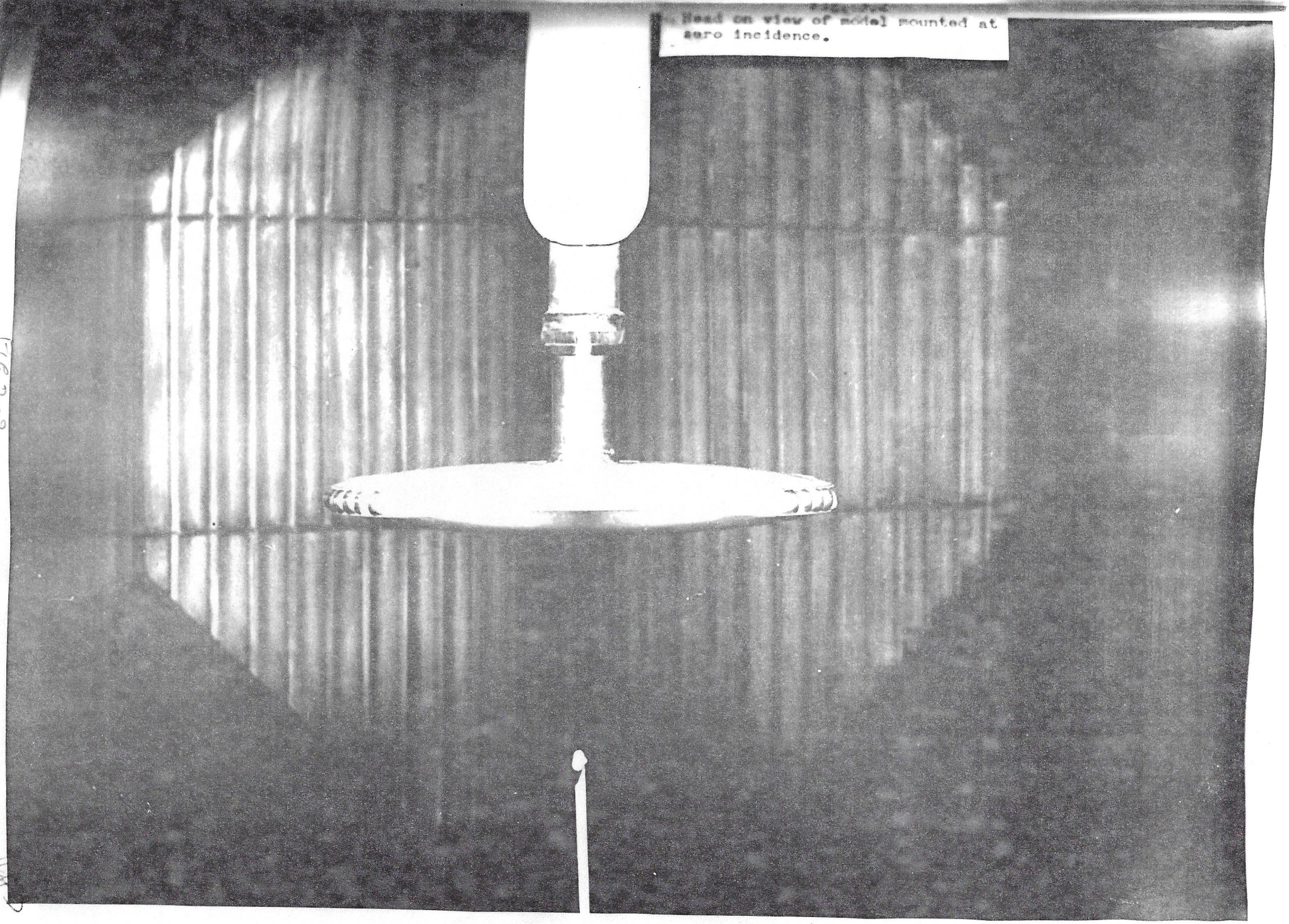

Head on view of model mounted at zero incidence.

F-16 3-2

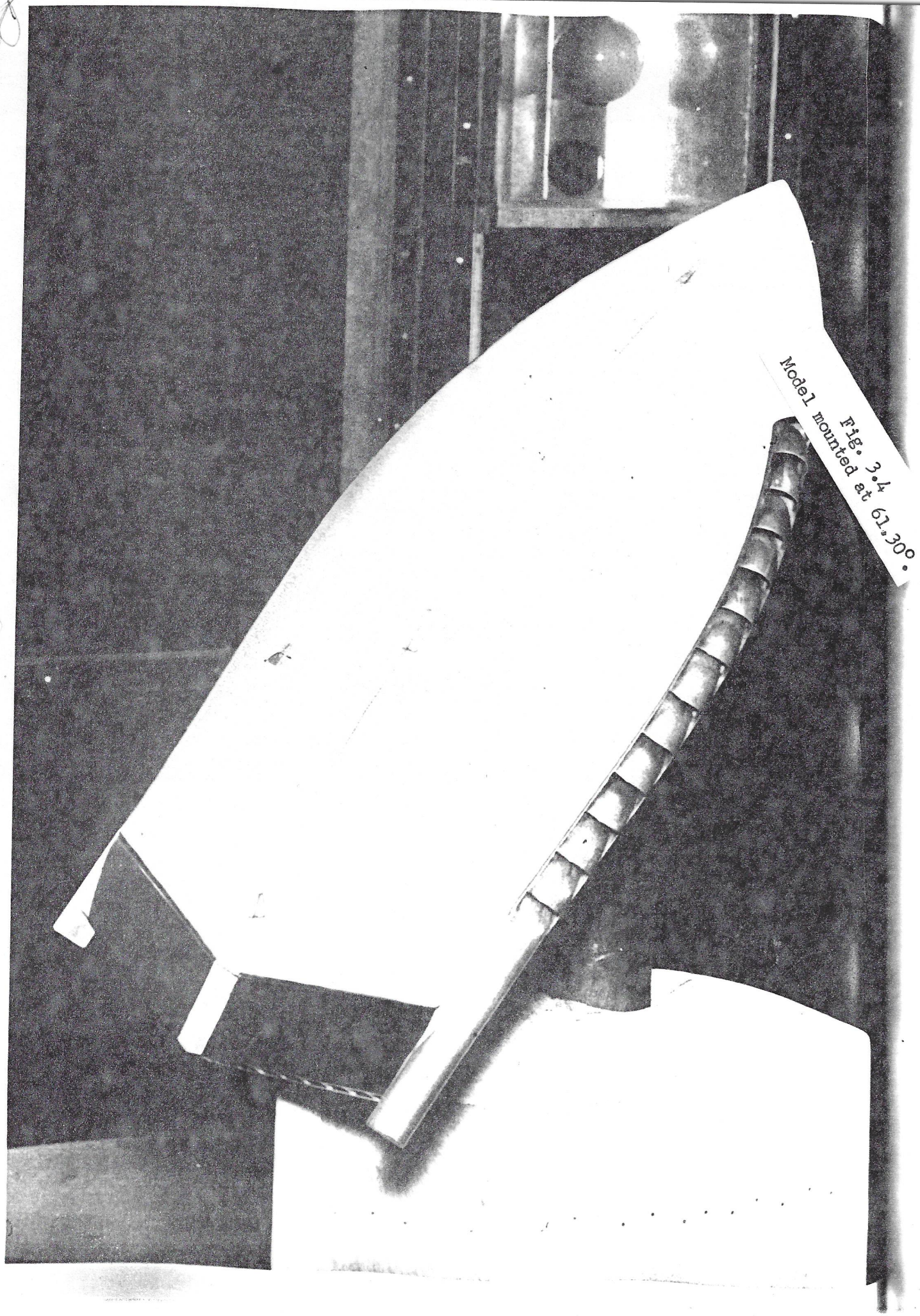

Fig. 3.4
Model mounted at 61.30°.

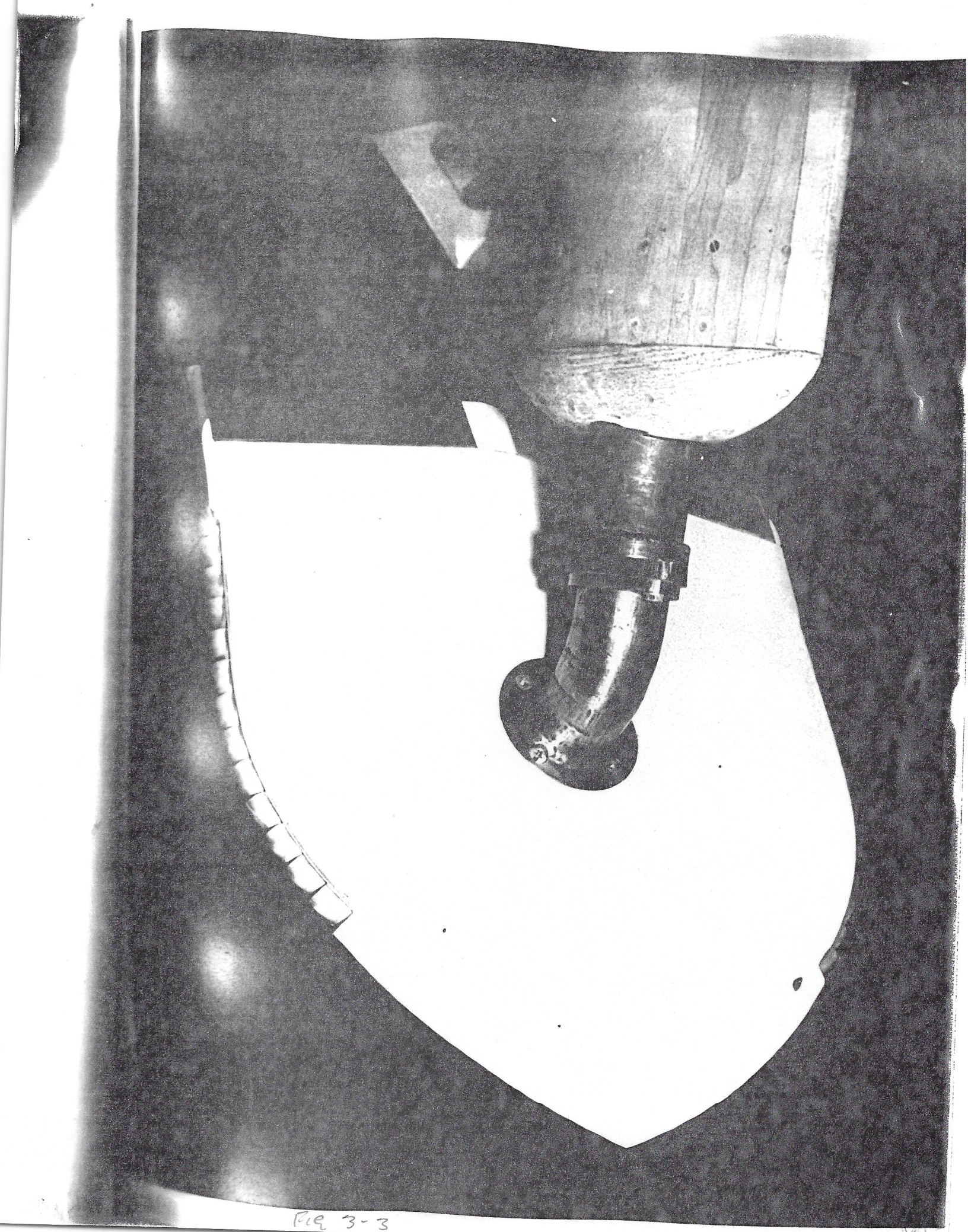

Fig 3-3

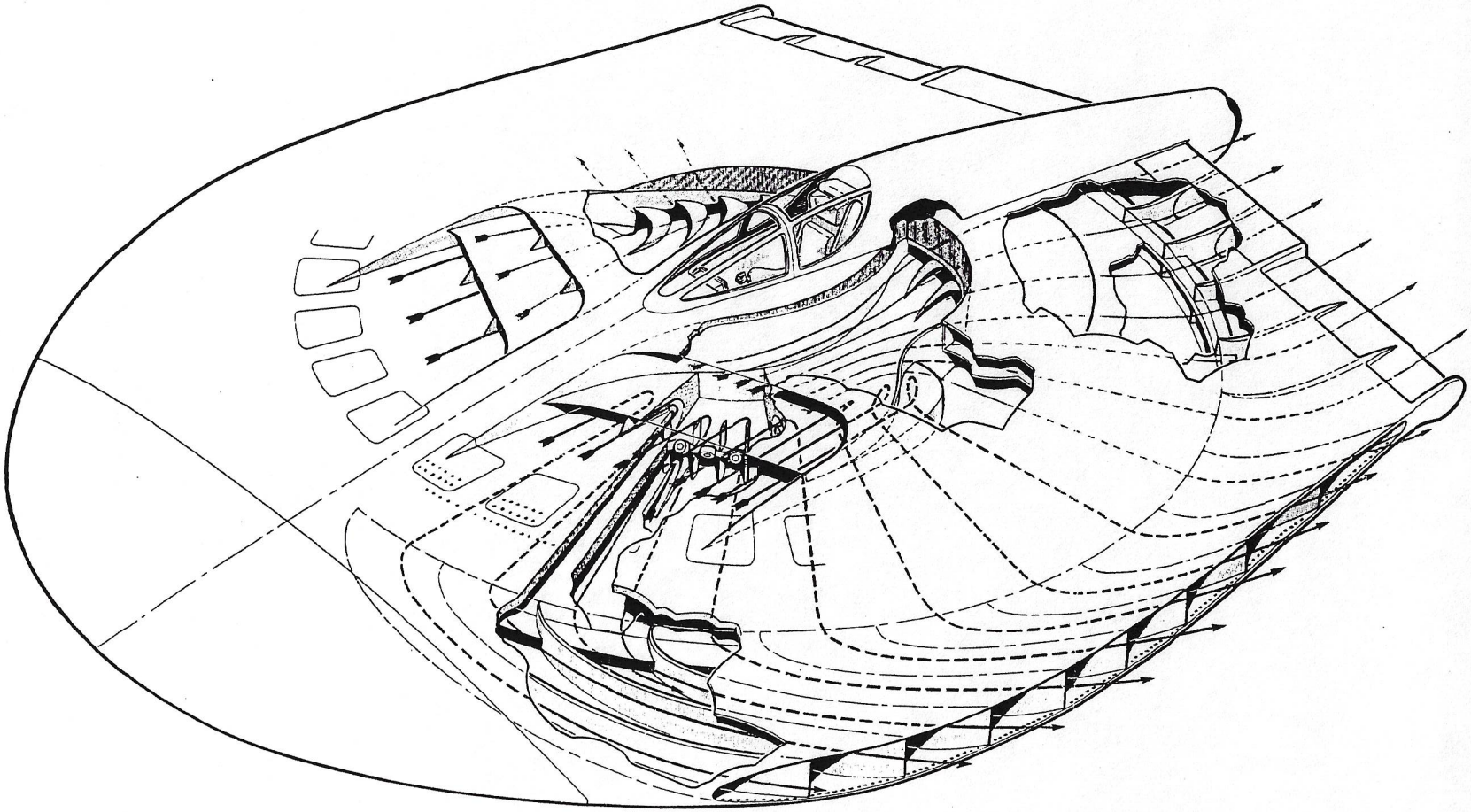

FIG 3 CUT-AWAY VIEW SHOWING INTAKES AND AIR FLOW

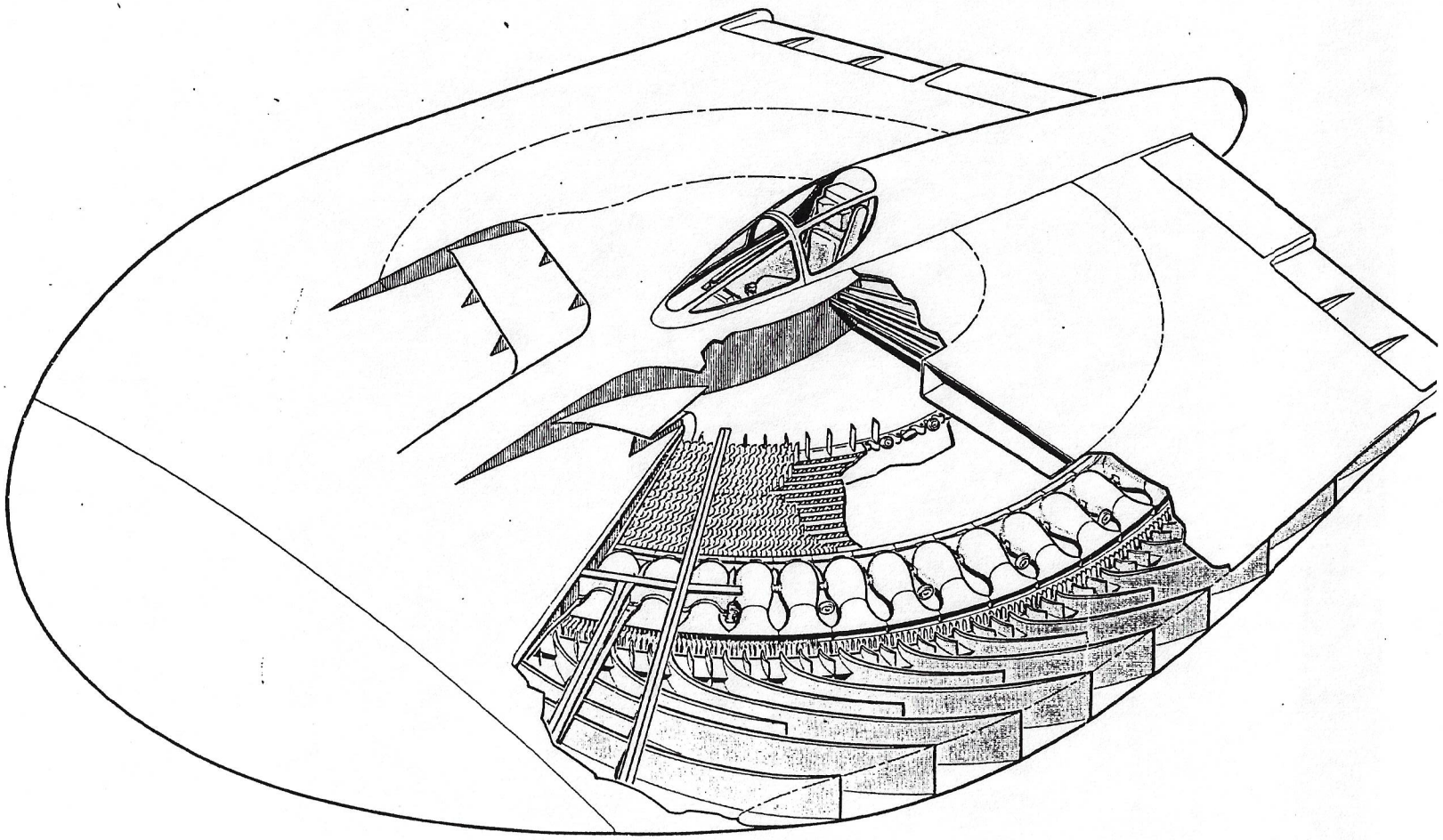

FIG 4 CUT-AWAY VIEW OF ENGINE AND AIRFRAME

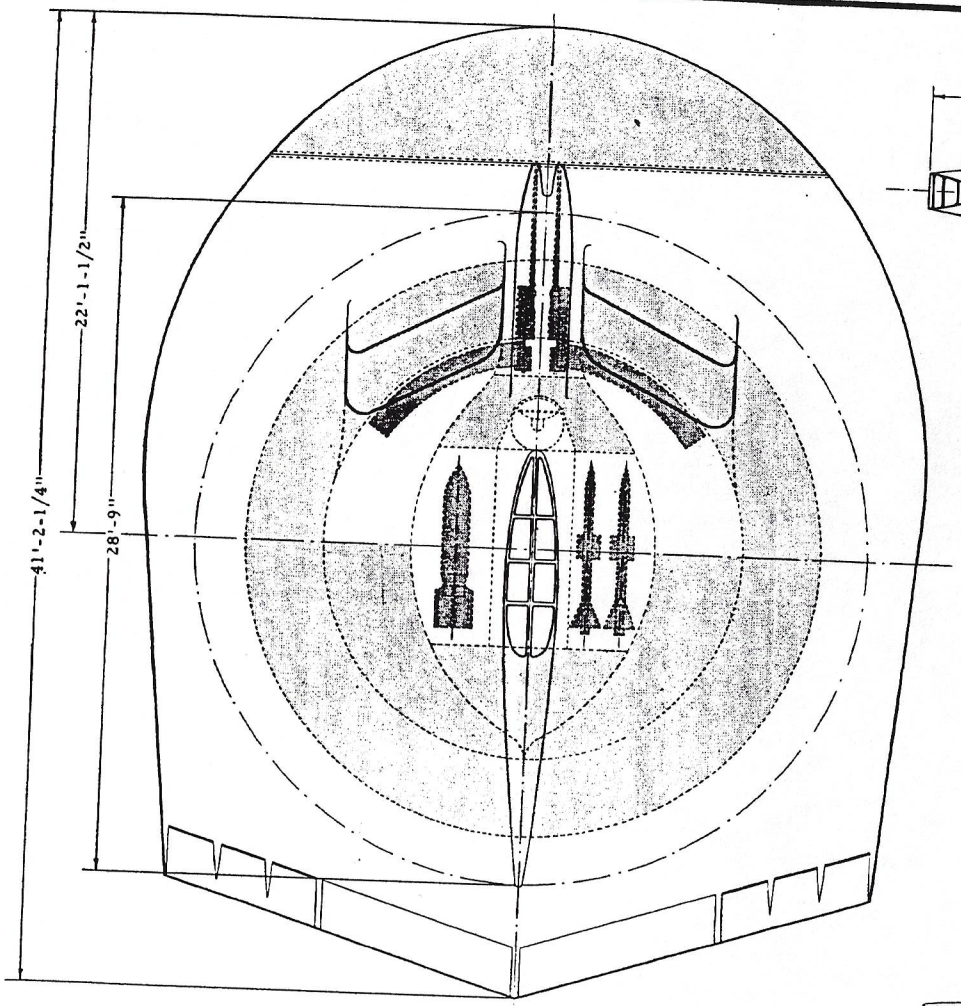

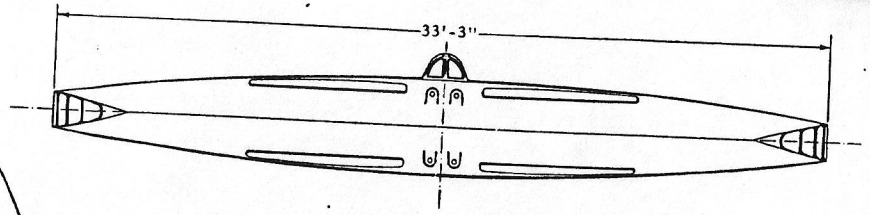

AIRCRAFT DATA

WING AREA 1,125 SQ. FT.

ASPECT RATIO 1.

FRONTAL AREA 110 SQ. FT.

GROSS WEIGHT 70,000 LB .

STATIC SEA LEVEL THRUST 92,250 LB .

THRUST WEIGHT RATIO 1.32

THRUST FRONTAL AREA RATIO 839 LB . PER SQ. FT.

COMPRESSION RATIO 5.5:1

FUEL CAPACITY 3,200 IMP. GALLONS

FUEL ARMAMENT

ARMAMENT

4 - 30 MM. REVOLVER GUNS "OERLIKON" AND 4 - 1600 LB. BOMBS OR

4 - 30 MM. REVOLVER GUNS "OERLIKON" AND 8 FALCON ROCKETS.

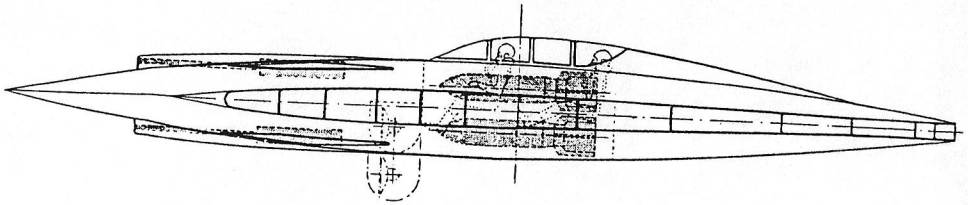

FIG 7 MILITARY VERSION OF AIRCRAFT

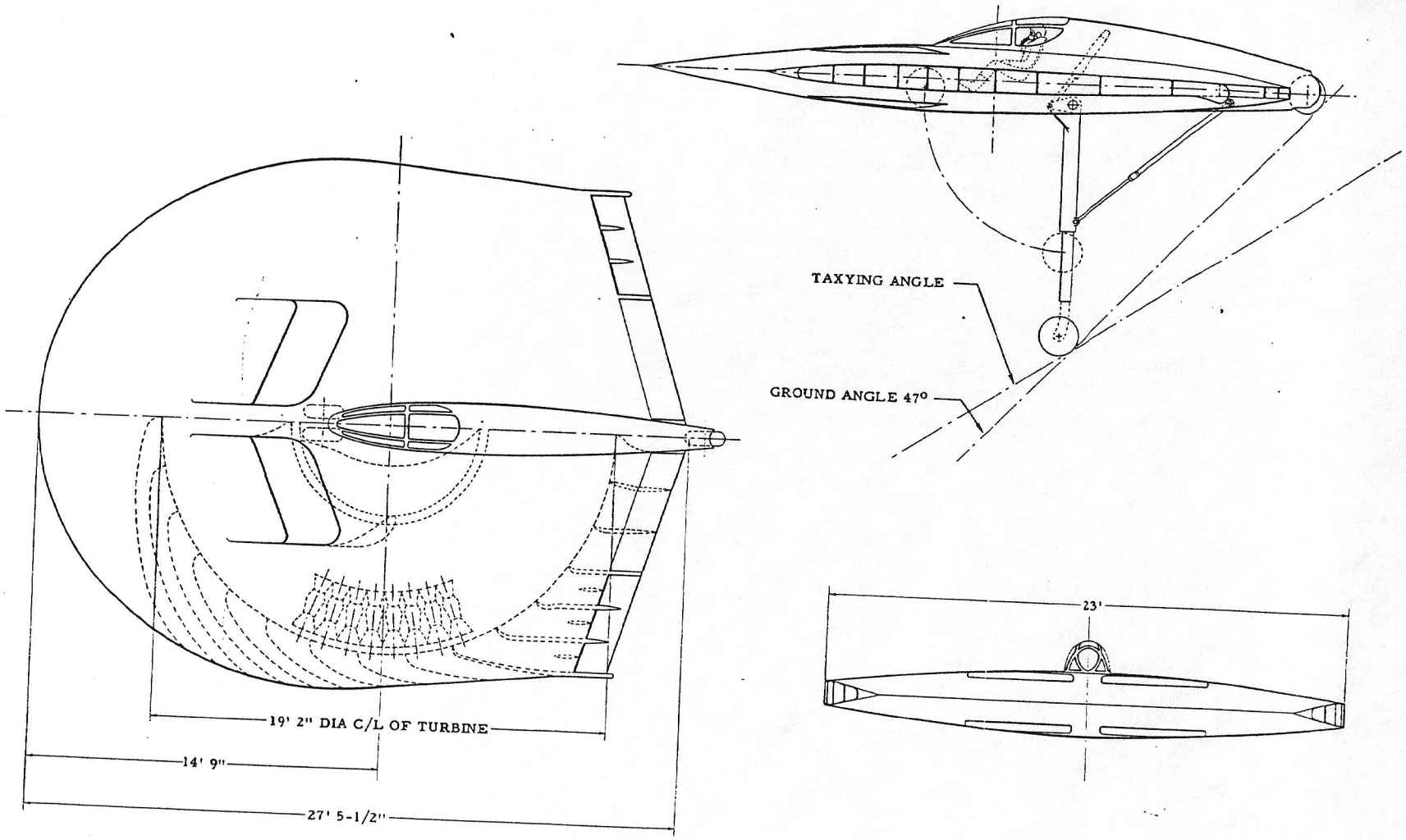

welded steel ro

FIG 1 GENERAL ARRANGEMENT OF AIRCRAFT

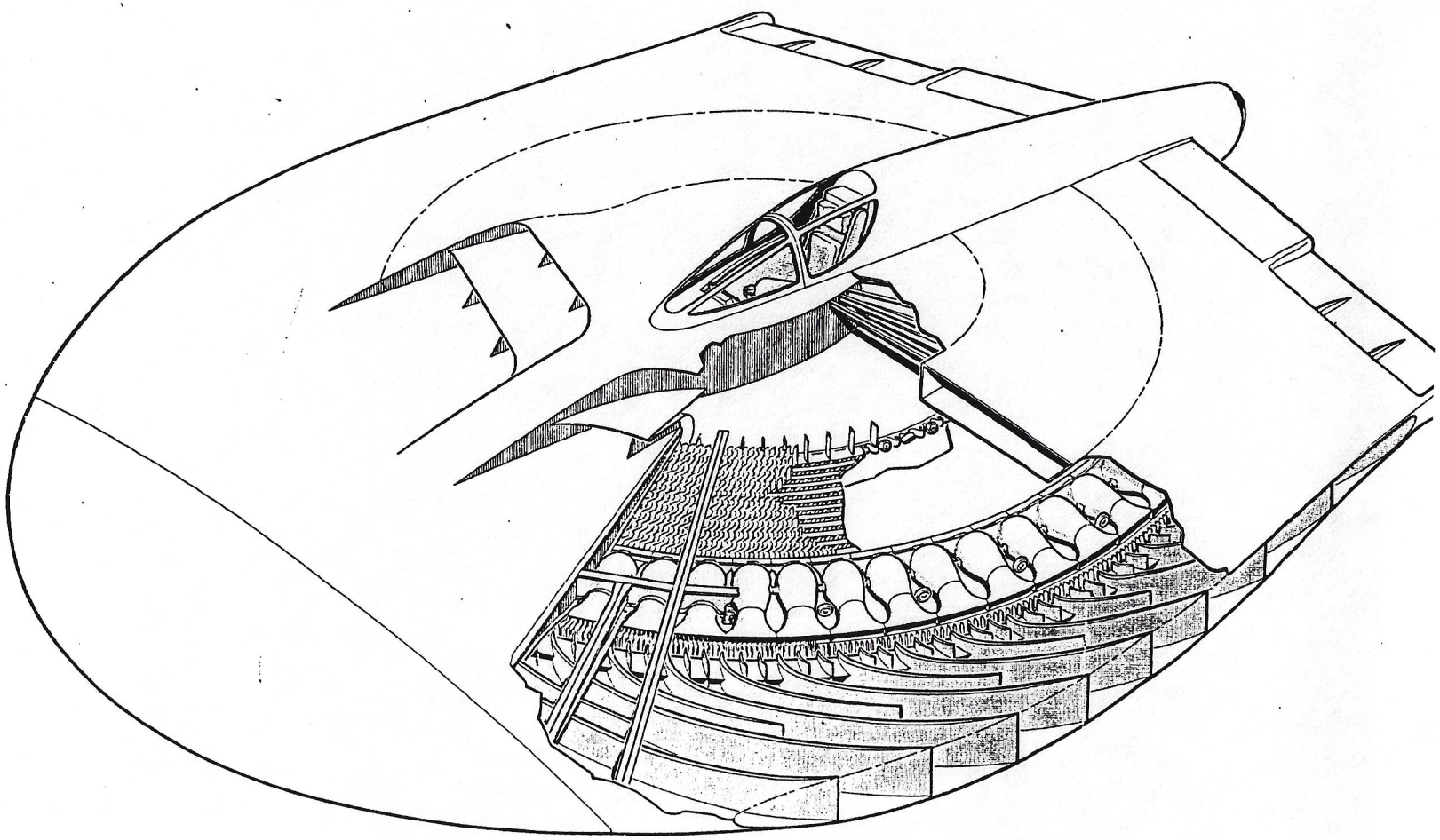

FIG 4 CUT-AWAY VIEW OF ENGINE AND AIRFRAME

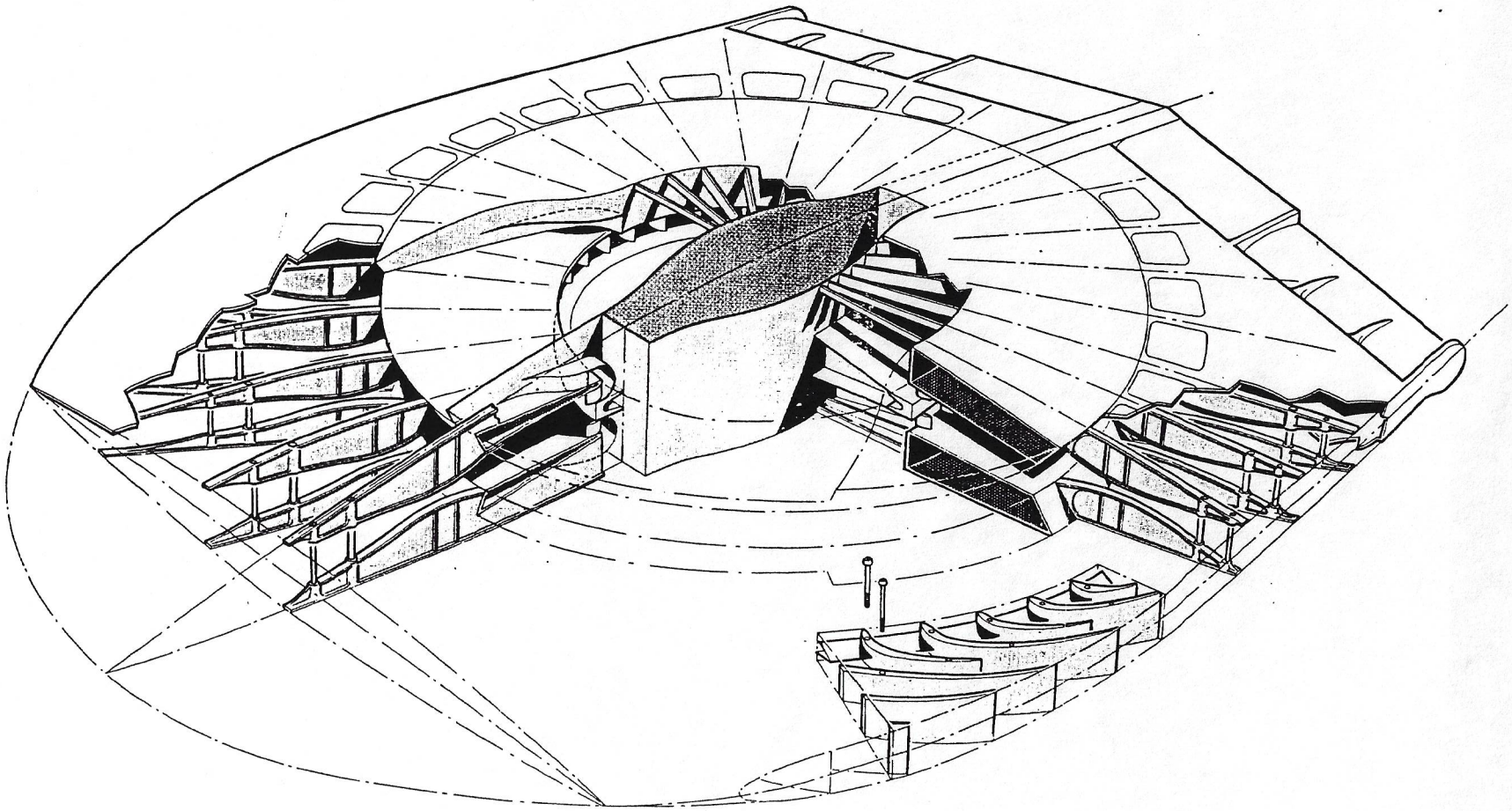

FIG 5 CUT-AWAY VIEW SHOWING BASIC STRUCTURE

TABLE OF COMPARATIVE PERFORMANCE

	C 104/1	C 104/2	BROCHURE PROJECT Y	DEVELOPED PROJECT Y	4 Sa 4 SCHEME (COMPARISON)	4 RA 14 SCHEME (COMPARISON)	C 104/1 REHEAT	C 104/2 REHEAT	PROJECT Y REHEAT
PARTICULARS									
Gross Wt.	27,400	50,400	26,500	25,000	25,000	35,000	28,200	52,000	30,000
Wing Area	617	1,189	500	500	500	550	617	1,189	600
Frontal Area	40	88	49	51	59	78.5	40	88	57
T.O. Net Thrust	14,400(1)	28,800(1)	41,000	37,000(2)	38,000	38,000	20,350(3)	40,700(3)	58,000
Fuel Capacity Gall.	980	1,960	900	1,000	200	900	980	1,960	1,200
INDICES									
S.L. Static Thrust/Wt	0.525	0.57	1.55	1.48	1.52	1.085	0.72	0.785	1.93
" /Frontal Area	360	327	850	725	645	485	510	460	1,020
PERFORMANCE									
Max Level Speed, M.P.H.	680	900	1,400	1,500	1,100	600	1,270(3)	1,420(3)	1,950(4)
Opl. Ceiling, fr. stand. start	42,000	42,000	63,500	70,000	NA	NA	50,500	53,500	80,000(5)
Time from standing start to									
40,000 ft.	8.0	6.5	2.9(7)	NA	NA	NA	5.5(8)	4.2(8)	NA
50,000 ft.	- (6)	- (6)	3.3(7)	NA	NA	NA	7.3(8)	5.1 (8)	NA
60,000 ft.	- (6)	- (6)	3.8(7)	NA	NA	NA	- (6)	- (6)	NA
Radius of Action, n. miles	300	390	325	375	30	250	200(3)	242(3)	425+
Corresponding Time, hours	1.59	1.94	1.0	1.15	0.25	1.4	1.13	1.25	NA
Take Off to 50ft., S.L. ICAN	4,600	4,000					3,350	2,920	
" 3000ft 100°F	8,400	7,000	NIL	NIL	(NIL)(9)	N.A.(10)	5,750	4,910	NIL
Landing fr. 50ft., S.L. ICAN	6,000	5,950					6,100(11)	6,150(11)	
3000ft 100°F	7,250	7,200	NIL	NIL	(NIL)(9)	NIL(9)	7,400(12)	7,450(12)	

(1) Assumes arbitrary 15% increase in thrust and consumption over calculated figures.
(2) Same mass flow as brochure engine.
(3) Assumes arbitrary 15% increase in thrust and consumption for both engine and afterburner. Possibility of obtaining thrust in frontal area shown is not established. No allowance made for increased weight of engine when developed [redacted] Speed, range and ceiling may be adversely affected when these matters are checked.
(4) ± 100 m.p.h.
(5) ± 5,000 ft.
(6) Dash indicates this altitude not possible.
(7) Includes time for acceleration to M = 1.6
(8) Includes time for acceleration to M = 1.5
(9) Doubtful manoeuvre in view of lack of stabilization.
(10) Take-off would be in a forward direction and unstick would have to be below the stall. 15,000 ft. ground run would be required to accelerate to normal flying take-off speed.
(11) With parachute. 7,500 - 8,500 ft of hard runway required for minimum safe operation. Minimum landing with reserve fuel and armament only, requires 6,000 - 7,000 ft.
(12) With parachute. Requires 9,000 - 10,000 ft. hard runway.

N.A. Not available.

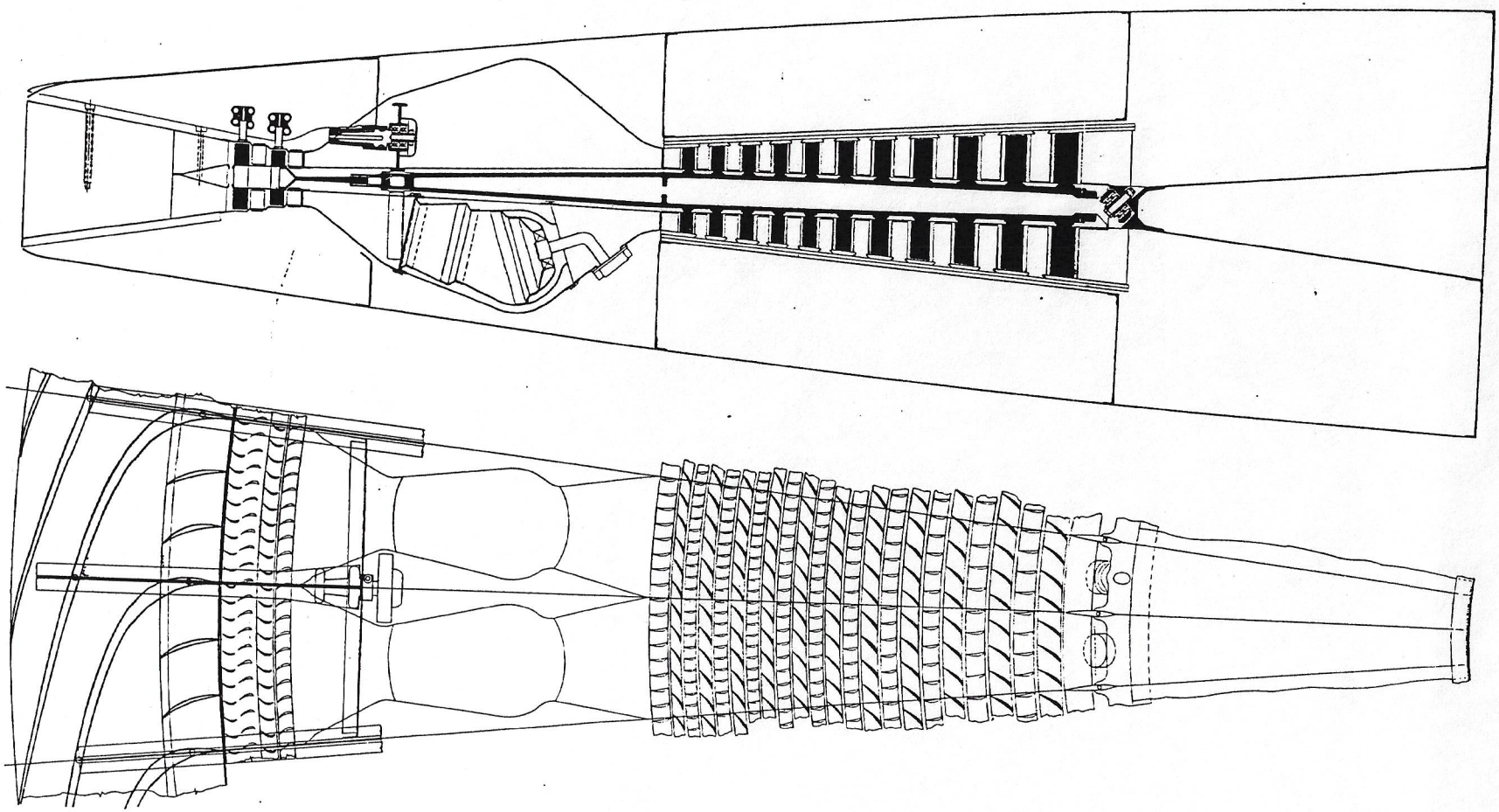

FIG 2 SPAN-WISE SECTIONAL DRAWING OF ENGINE