Nov. 1, 1960 W. P. TANNEHILL 2,958,157

BIRD CALL

Filed Sept. 8, 1959

FIG-1

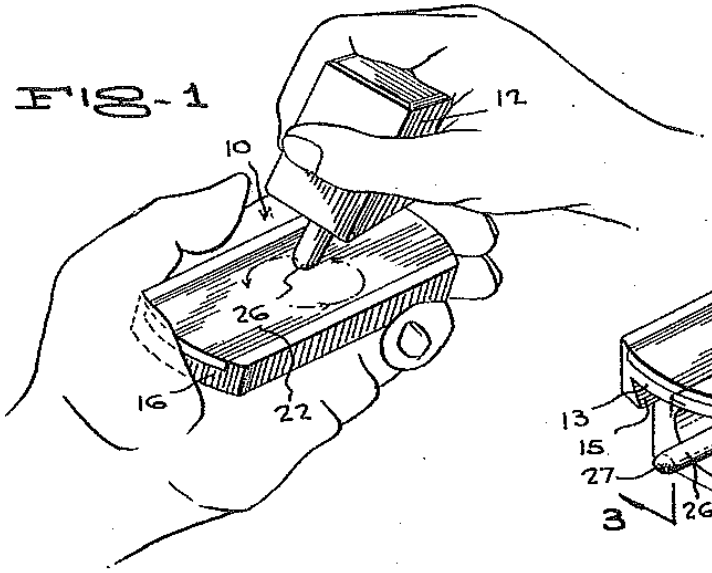

FIG-2

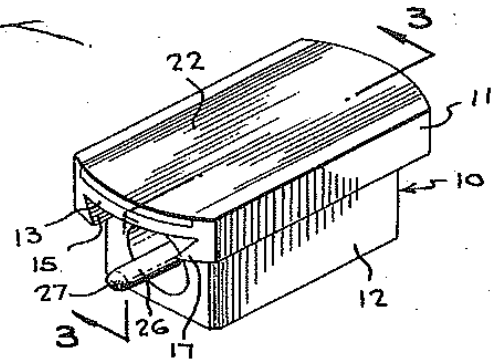

FIG-3

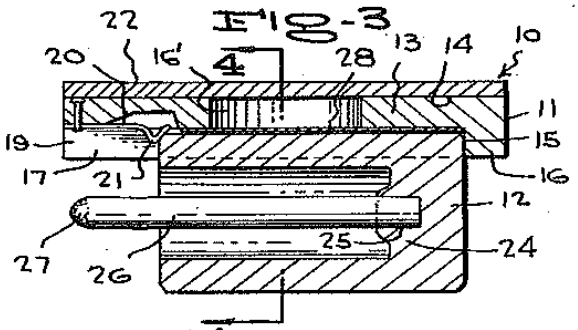

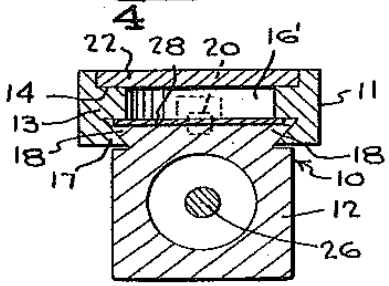

FIG-4

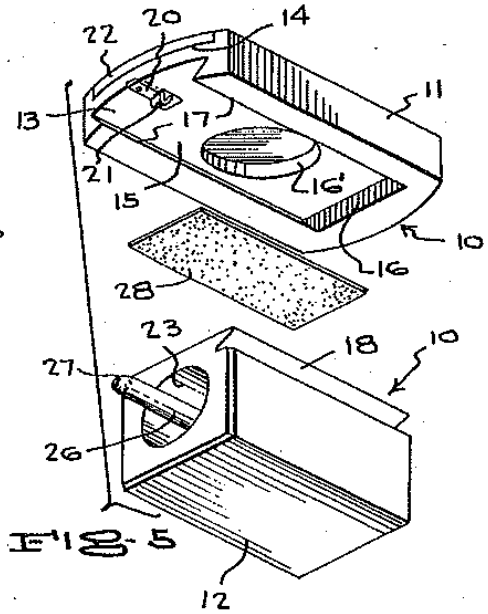

FIG-5

INVENTOR.

WILLIAM P. TANNEHILL

BY

Christian R. Hielsen

ATTORNEY.