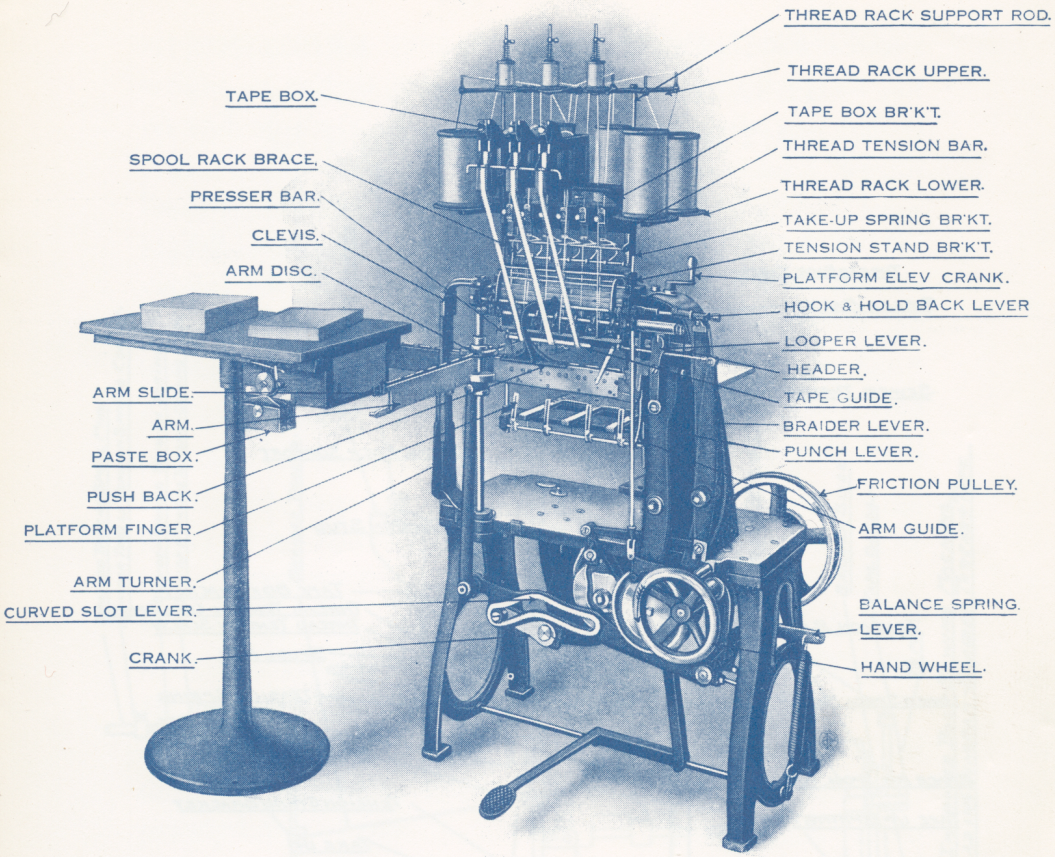

IMPROVED NO. 3. SMYTH BOOK SEWING MACHINE

Range 2″ x 2½″ to 9″ x 12″.

Capacity 56 to 60 signatures per minute.

Diameter of driving pulley 10″.

Width of belt 1″.

Speed of driving pulley 210 to 230 revolutions per minute.

Floor space 4½ x 6½ feet.

Power required ⅛ horse power.

Gross shipping weight 650 pounds.

Space 32 cubic feet.

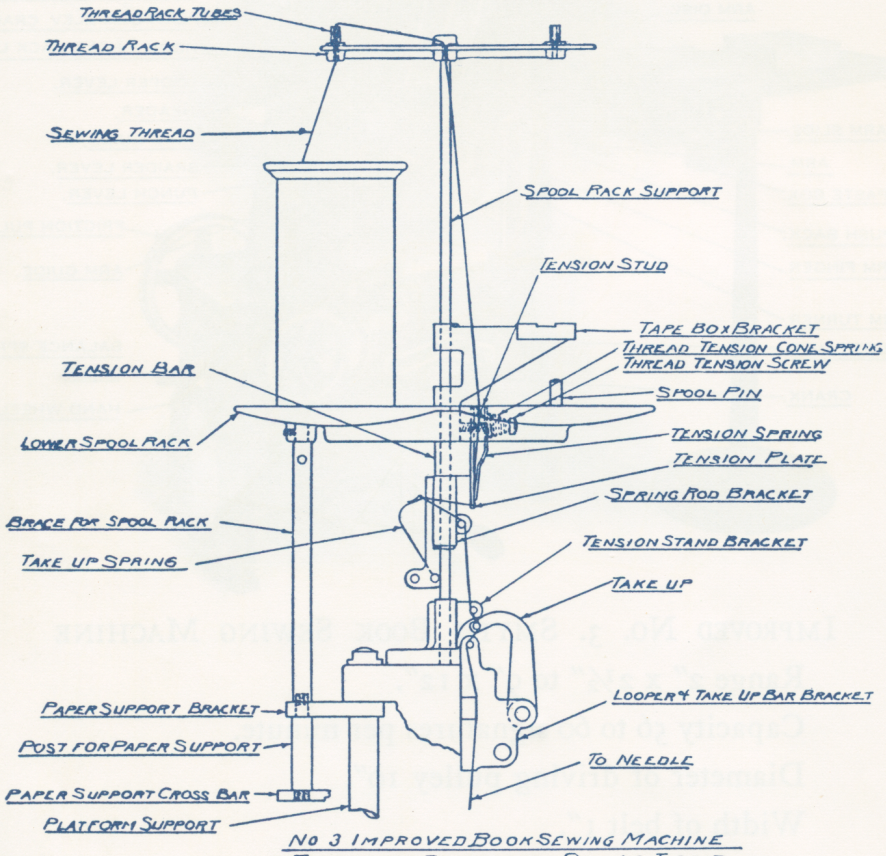

No 3 Improved Book Sewing Machine
Threading Diagram of Sewing Thread.

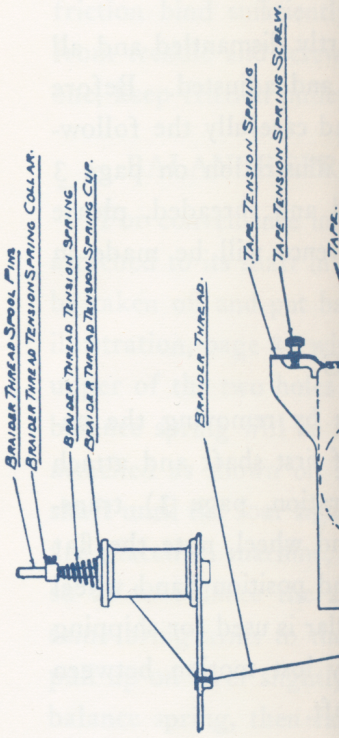

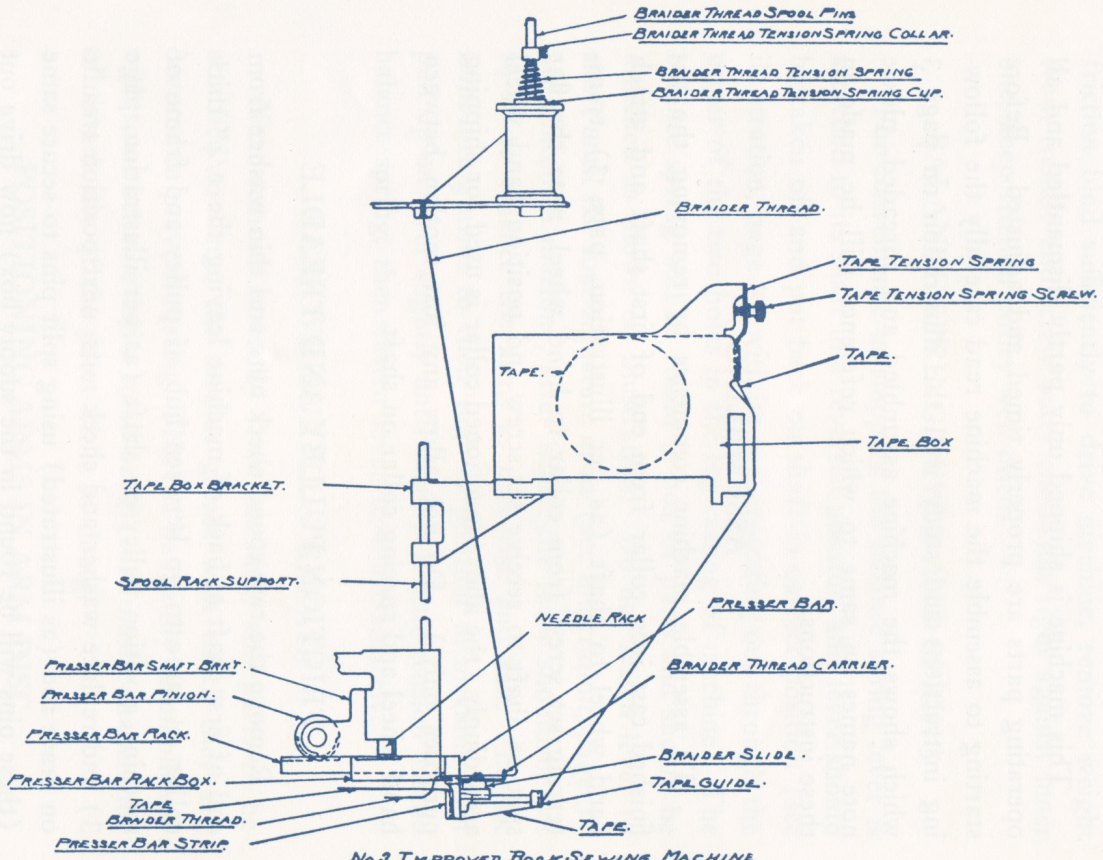

No. 3 Improved Book Sewing Machine
Threading Diagram - Braider Thread + Tape

GENERAL INSTRUCTIONS FOR ERECTING, OPERATING AND ADJUSTING No. 3 SMYTH BOOK SEWING MACHINE

This machine is shipped only partly dismantled and all operating parts are properly timed and adjusted. Before starting to assemble the machine read carefully the following instructions and study well the illustration on page 3 which shows the machine assembled and threaded, please note names on same to which reference will be made in these instructions.

ASSEMBLING

To assemble machine commence by removing the unfinished cast iron collar from end of first shaft and attach hand wheel to shaft (as per illustration, page 3) transferring set screw from collar to hand wheel, note the flat spot on shaft to receive set screw and position hand wheel accordingly (the above mentioned collar is used for shipping purposes only.) Do not allow any lost motion between hand wheel and spacing collar on shaft.

FRICTION PULLEY AND TREADLE

Remove the two round check nuts and thin washer from end of first shaft at back of machine leaving the 1/4" thick collar on same to go between hub of pulley and frame of machine, position pulley on shaft (as per illustration, page 3) and replace washer and check nuts, next position treadle on brace rod (as illustrated) using split pins to secure same (these pins will be found in the supply box) now drive out small taper pin in end of short fork lever (this lever is under bed of machine) and connect top of treadle by the wire connection link, attached to same, to the short fork lever and

replace taper pin. To
weight on end of trea
on end of shaft agains
friction bind sufficientl
from treadle and screw
one, keep friction pulle

BALANCE SPR

For convenience in
attached to its shaft in
be taken off and put ba
illustration, page 3) wi
upper of the two holes
balance spring will be f
attached as shown on i
shaft until the four sign
are placed in machine,
so as to balance the a
same bring arms to the
pull up on lever slightly
balance spring, then fa

REMOVE

Next remove carefu
attached to same, the
covered to prevent rusti
with some benzine and a
to disturb any of the pa

POSITIONIN

Before locating Sign
in arm disc wash them
remove the surplus grea

replace taper pin. To adjust friction pulley place a heavy weight on end of treadle, then adjust the inner check nut on end of shaft against pulley until the male and female friction bind sufficiently to drive machine, remove weight from treadle and screw outer check nut tight against inner one, keep friction pulley well oiled.

BALANCE SPRING LEVER AND SPRING

For convenience in shipping the balance spring lever is attached to its shaft in a reversed position, this lever should be taken off and put back on shaft in correct position (see illustration, page 3) with its end projecting out through the upper of the two holes in the leg casting of machine. The balance spring will be found in box of parts and should be attached as shown on illustration. Do not fasten lever to shaft until the four signature arms (see illustration, page 3) are placed in machine, after which the lever should be set so as to balance the arms as they rise and fall. To set same bring arms to their highest position in machine then pull up on lever slightly until there is a little tension on the balance spring, then fasten lever to shaft securely.

REMOVE SURPLUS GREASE

Next remove carefully from machine, and parts to be attached to same, the surplus grease with which they are covered to prevent rusting. This can be readily accomplished with some benzine and a small brush, care must be taken not to disturb any of the parts while so doing.

POSITIONING ARMS IN ARM DISC

Before locating Signature Arms (see illustration, page 3) in arm disc wash them thoroughly in benzine or gasoline to remove the surplus grease next turn hand wheel in direction

indicated by arrow (See illustration, page 3) until the arm disc moves down upright shaft to a position just under the platform, now remove the four disc screws in arm disc and clean carefully, lower part of disc on which the arms rest, also the under side of upper disc especially the four grooves in same, in each of these grooves near the inner end are positioning pins and as each arm has a slot that fits over these pins to position them correctly for the needles, care should be taken before putting the arms between the discs to see that grooves in upper disc are free from grease and dirt. Replace the four disc screws in position and insert the four arms between the arm discs taking care that the pins in top disc enter the slot in top end of arm before disc screws are turned down hard.

ARM TURNER AND CLEVIS

The arm turner (see illustration, page 3) which turns the arms should be set so that the arms when descending go freely between wooden fingers in same with arm turner projecting toward rear of machine. The clevis (see illustration, page 3) should be positioned in a direct line with the length of machine so that when signature arm is in sewing position the curved needle will enter arm properly and arm will be held central with needle without any pressure forward or back.

SPOOL AND THREAD RACK

To insure the proper positioning of these several parts on machine reference should be made to cut on page 4 which is an end view of thread rack assembled looking from the left of machine. Referring to cut, there is attached to part marked post for paper support, a small hexagon nut used for shipping purposes only; remove same and substitute

for it part marked, bra
round rod 7/16" diamet
hole in same to be us
tight on paper support
rack supports in tensio
same, these supports a
length with a small pin
end, which is the lower
stand brackets. Next
attached the six take-u
slipped on spool rack
cross support pins; nex
tensions attached shou
pushed down to top o
spool rack should be p
top of tension bar ar
tighten screw in spool
the tape box bracket
down to top of lower s
on top of rods comple

Next assemble fee
column, (as per illus
column on floor so th
left of the signature
and 1" from signature
Next assemble feed ta
at rear of machine by

The push back is
tration, page 3) and

for it part marked, brace for spool rack. This brace is a round rod 7/16″ diameter and about 7″ long, there is a small hole in same to be used with spanner for screwing brace tight on paper support bracket. Next place the two spool rack supports in tension stand bracket one in each end of same, these supports are 1/4″ diameter and about 16″ in length with a small pin driven into them about 3″ from one end, which is the lower end that should be placed in tension stand brackets. Next the spring rod brackets, to which are attached the six take-up springs and thread rod, should be slipped on spool rack support rods and pushed down to cross support pins; next the tension bar with the six thread tensions attached should then be positioned on rods and pushed down to top of spring rod bracket; next the lower spool rack should be placed on rods and pushed down to the top of tension bar and on to brace for spool rack, now tighten screw in spool rack against brace for spool rack; next the tape box bracket should be placed on rods and moved down to top of lower spool rack; next the thread rack placed on top of rods completing the assembling of thread rack.

FEED TABLE

Next assemble feed table and attach to top of feed table column, (as per illustration, page 3) position feed table column on floor so that the front of feed table is 6″ to the left of the signature arm projecting from front of machine and 1″ from signature arm projecting from side of machine. Next assemble feed table extension and attach to top of bed at rear of machine by means of feed table extension bracket.

PUSH BACK

The push back is attached to the take-up bar (see illustration, page 3) and can be adjusted for different sizes and

kinds of work, its purpose is to prevent the work in the machine from bulging out at the center and thereby come in contact with the signature that is being carried up on signature arm into sewing position. To adjust push back, loosen clamp screws in same and place foot of push back against the work so as to push the work back about 1/2" or in other words set so that the work is pushed back enough to allow the signature on signature arm to pass without touching. Having now completed the assembling of machine and removed all the surplus grease from same, before proceeding further search out carefully all oil holes and make sure that all moving parts are well oiled using first grade machine oil only.

THREADING UP MACHINE

To thread the machine for plain sewing, that is when tapes are not required (see cut on page 4) there is sent with the machine six large felt washers, these should be placed on lower spool rack for the spools to rest on, their purpose is to prevent the thread from getting caught under the spools as it falls down around the bottom of same from time to time. After spools are placed in position pass threads up through thread rack tubes then over and down through holes in thread rack, commencing with the first hole and skip every other one (the holes skipped are used for the braiding thread when tapes are required) then down to the thread tension through hole in square tension block, between tension plates through small hole at bottom of tension plate down in front of rod in take-up spring bracket, then down to take-up rod and back of top rod in front of movable take-up rod, in back of lower take-up rod then straight down to needle. Before threading needles, place a signature on the signature arm that is ascending, positioning same in right relation to

the first needle for lengt
the head of signature t
wheel of machine backw
the machine, after which
(see illustration, page
spring and holes accordi
first stitch and head of s
the signature arm with
inches below the needles
header (this part rests
has a knife attached also
cam or angular piece of
enter same, now turn ha
one and one-half inches
the left so as to move
more than one eighth o
securely. Next position
arms in exactly the sam
previous one was locate
the arm slide, is for the
in other words, keeping
hand wheel until the ar
and the curved needles
into the holes in signatu
tweezers and pass it th
the thread should be p
which serves as a guide
and eye in needle. Ne
sewing thread (see cu
threads in left hand a
sewing the signature o
on the next arm and t
entered the arm guide

the first needle for length of head, that is, the distance from the head of signature to the first stitch. Next turn hand wheel of machine backwards to bring signature arm out of the machine, after which place a signature arm slide on arm (see illustration, page 3) positioning same by means of spring and holes according to distance required between the first stitch and head of signature; now turn hand wheel until the signature arm with signature reaches a point about five inches below the needles, then loosen head screw and adjust header (this part rests in a slot near top of main arm and has a knife attached also attached to the front is a small flat cam or angular piece of steel) so that arm slide on arm will enter same, now turn hand wheel until signature arm is about one and one-half inches below needles then adjust header to the left so as to move the signature arm slide on arm not more than one eighth of an inch, after which fasten header securely. Next position the three remaining arm slides on arms in exactly the same relation to the head stitch as the previous one was located. The header, in conjunction with the arm slide, is for the purpose of registering the signatures, in other words, keeping the book even at the head, now turn hand wheel until the arm with signature is in sewing position and the curved needles have commenced to move forward into the holes in signature. Now take the thread with small tweezers and pass it through the eye of needle after which the thread should be placed back of the front needle guide which serves as a guide to keep the thread in line with groove and eye in needle. Next hook the take-up springs on to the sewing thread (see cut on page 4) now take the sewing threads in left hand and turn hand wheel with right hand sewing the signature on arm, now place another signature on the next arm and turn hand wheel until end of arm has entered the arm guide which is attached to the inside of

main arm of machine, now step to back of machine and loosen the small knurled head screw at end of platform also loosen the square head set screw on upright rod which works the platform fingers, now step to the front of machine and turn the platform elevating crank (see illustration, page 3) and adjust the platform so that the signatures will be properly supported, yet allowing them to pass easily through machine, again step to back of machine and tighten knurled head screw in end of platform and also adjust platform fingers so that they push the sewed signatures in the machines far enough to clear the ascending arm, then tighten the square head set screw on upright rod. Please note that the platform and fingers can only be adjusted when the machine is in the correct position, namely, when the signature arm is ascending and has entered the arm guide. After sewing a few signatures step to the rear of the machine and adjust the tail knife so that it cuts slightly into the tail of the sewed signatures and supports them, care must be taken not to have the tail knife cut too deep into the signatures for the reason that it will not allow the work to pass through the machine freely and thereby cause the sewing threads to break, in a few words the object of the knives and platform is to support the work with sufficient firmness to enable the machine to sew the books tight, would advise turning the machine by hand until several signatures have been sewed to see that all parts are working properly, before starting the motor.

GUMMER

The work to be sewed is placed on table at left of operator and arranged so that it will be sewed backwards i.e. the last signature in the book sewed first. The paste box, which is screwed to the underside of this table, is for the purpose of pasting the first and last signature of each book. Two

signatures of each book
the two discs in the gu
of the signature again
gauge should be set so
paste about 1/8" from
The first signature of e
above is the last signa
should be pasted as wel
the book. The signature
the one to be pasted, b
pasted the paste would
already sewed and the
sheets. The paste shou
ture that faces the ope
the side that would co

THREADING-UP

Se

When it is desired
employ the braiding t
tional braiding thread
thread rack; in conjun
to use the conical spri
order to give a slight
ing threads pass from
in upper thread rack
little braider thread ca
thread carrier bar, wh
bar. These thread ca
with their bent ends
first pass through the

signatures of each book must, therefore, be drawn between the two discs in the gumming device with the folded edge of the signature against the movable back gauge. This gauge should be set so that it will apply a narrow strip of paste about 1/8″ from the folded edge of the signature. The first signature of each book sewed (which as explained above is the last signature of the book after it is sewed) should be pasted as well as the next to the last signature of the book. The signature next to the last instead of the last is the one to be pasted, because if the last signature should be pasted the paste would be put on the side next to the sheet already sewed and the paste would be rubbed off on these sheets. The paste should be applied on the side of the signature that faces the operator after it has been sewed, not on the side that would come in contact with the sewed work.

THREADING-UP THE BRAIDER THREAD FOR TAPE WORK

See Cut on Page 5

When it is desired to sew over or through tapes and to employ the braiding thread, it is necessary to supply additional braiding thread spools that go on the very top of the thread rack; in conjunction with these spools it is necessary to use the conical springs that are sent with the machine in order to give a slight tension to the thread. These braiding threads pass from the spools downward through holes in upper thread rack. They then pass downward to the little braider thread carriers that are attached to the braider thread carrier bar, which in its turn is attached to the presser bar. These thread carriers should be positioned on the bar with their bent ends outward. The braider threads should first pass through the hole in this bent end and then through

the hole in the straight end. These braider thread carriers should be positioned so that when the presser bar is moved inward they will carry the braider thread far enough towards the rear so that the take-up hooks and holdbacks will alternately come down in front of them. When the presser bar moves forward again the braider thread carrier bar has a lateral motion sufficient so that if the threads have just been engaged by the holdbacks, they will carry the threads, the next time the presser bar moves, rearward back of the hooks, thus lacing the braiding threads between the hooks and the holdbacks.

There is a tape box bracket sent with each machine, to which can be attached the three (3) tape boxes, (see cut on page 5). The tapes pass in front of the bracket on presser bar and between guide on back of presser bar and the presser bar itself then over the top of the signatures. A tension is provided on the tape boxes. In starting up the machine in sewing over or through the tapes it is necessary to hold with clothes pins or other clamps both the tapes and the braiding threads on the back cross bar of the machine until after three or four signatures have been sewed.

This machine is capable of producing three (3) different styles of tape sewing:—

A. Braiding over the tapes with independent braiding thread as above described.

B. Dispensing with the braiding thread and passing one line of stitches of the sewing thread lengthwise along and through the center of the tape.

C. Both sewing through the tape with the sewing thread and over it with the braiding thread.

These three (3) styles are accomplished in a very simple manner by simply adjusting the presser bar strip at back of presser bar, cut on page 5, to properly direct the tapes.

For " B " style this
to guide the tapes in suc
directly under the interl
the sewing threads sew
of the tape, the braidin
the tapes to the right.

In styles " B " and "
through the tape, prov
tape between books. T
manner; when last signa
must stop the machine
position, pull off a supp
boxes, (see illustration,
neath the back of the p
holddown pull it down
downs are only used w
tape and should be re
first signature of the ne
When sewing over tap
stop between books or
through the tape we c
makes a fold of tape b
kind is wanted in lar
sirable.

PROVISION FOR

The discs which
elevating slotted lever
the bottom end of this
held in place by a clar
the clamp screw and t
small spanner holes.

For " B " style this presser bar strip should be set so as to guide the tapes in such a manner as to bring their centers directly under the interlooping or exit line of stitches, so that the sewing threads sew directly through the left-hand edges of the tape, the braiding thread lacing back and forth over the tapes to the right.

In styles " B " and " C " where the sewing thread passes through the tape, provision must be made for a supply of tape between books. This is accomplished in the following manner; when last signature of a book is sewed the operator must stop the machine with the presser bar in its forward position, pull off a supply of tape by depressing rod on tape boxes, (see illustration, page 3) then reach up from underneath the back of the presser bar, catch one tape with each holddown pull it down and let go. Of course these holddowns are only used when the operator is sewing through tape and should be removed immediately after sewing the first signature of the next book and before it is pushed back. When sewing over tapes (style " A ") it is not necessary to stop between books or to use the holddowns. For sewing through the tape we can supply an extra attachment which makes a fold of tape between each book, when work of this kind is wanted in large quantities this device is very desirable.

PROVISION FOR ADJUSTING ARMS IN CASE OF WEAR

The discs which hold the arms are connected to the elevating slotted lever by an upright connecting lever. In the bottom end of this upright lever is an eccentric bushing, held in placé by a clamp screw. To adjust the arms loosen the clamp screw and turn the eccentric bushing by means of small spanner holes. The arms should be adjusted when in

their highest position and should be adjusted so that the top of the outer end of the arm comes up to the slot in arm guide. Provision is made for a further adjustment of the arms in the bottom part of disc where the eccentric jacks are located. These jacks are to be used to level up the arms when they sag at the ends. The signature arms when at their highest position and while the needles are entering them should remain stationary, that is — should have no movement either up or down. This is accomplished by the curved slot elevating lever. This is constructed so that a portion of the curve corresponds exactly to the radius of the crank. If this curved slot elevating lever, by any accident should be moved to the right or left it should be moved back to its correct position by swinging the bracket, to which the curved slot lever is attached, either to the right or left, as may be necessary to make the curved slot in the lever correspond exactly with the radius of the crank roll, during the time that the needles are entering the arms. The arms have renewable and reversible needle raceways and should be frequently cleaned. The accumulation of paper dust should be thoroughly removed at least once a week.

LOOPERS

The loopers should be positioned so that the point of the looper almost touches the curved needle when the looper has its forward rocking motion. The looper should be set so that the curved needle is close to the back, or heel, of the looper, as the curved needle comes out of the signature. With the machine is furnished a gauge for setting the looper bar in its correct postion, should it for any reason become misadjusted. The looper bar should be set so that when the needles are at rest in their rearmost position, the wide dimension on the gauge just fills between the outer edge of

the right-hand bracket a
thin dimension just fills s
bracket and clamp collar

SPLIT LOOPER LEV

The tension on spri
correct on machines as s
be necessary to change it

The control of the b
of the loops and tightne
the three following adju
each other to meet each

1st. The travel of
regulated by adjusting
bar.

2nd. Correct tensi

3rd. Correct tensi

It is difficult to give
three adjustments. Th
meet the varying condi
paper, thickness of sig
etc., but when correctly
obtained.

The platform is rai
of main arm, it shoul
moved back on the pl
platform. These finge
platform is raised or lo
of a slotted lever on the

the right-hand bracket and the collar on looper bar; and the thin dimension just fills space between inside of the left-hand bracket and clamp collar.

SPLIT LOOPER LEVER AND LOOPER BAR WITH STOP-OFF

The tension on spring in split lever we believe to be correct on machines as sent out and hardly think that it will be necessary to change it except at rare intervals.

The control of the breaking of threads, the pulling down of the loops and tightness of sewing are effected by getting the three following adjustments in correct relationship with each other to meet each particular job. viz:

1st. The travel of the loopers to the right which is regulated by adjusting stop-off at left-hand end of looper bar.

2nd. Correct tensions on take-up springs.

3rd. Correct tensions on thread tensions.

It is difficult to give specific instructions in regard to these three adjustments. They must be made with judgment to meet the varying conditions arising from the differences in paper, thickness of signature, kind and quality of thread, etc., but when correctly made satisfactory sewing should be obtained.

PLATFORM

The platform is raised or lowered by the handle on top of main arm, it should be set so that the signatures are moved back on the platform freely by the fingers on the platform. These fingers must be adjusted each time the platform is raised or lowered. These are adjusted by means of a slotted lever on the operating upright rod.

PRESSER BAR

The presser bar should be adjusted so that it presses the signature sewed back sufficiently to allow the hooks and hold-backs to come down freely in front of the signature that has been pushed back by the presser bar.

PRESSER BAR FINGERS

These are of sheet steel and can be moved to suit different widths of signatures. Their office is to prevent signatures from flying out too far when the platform fingers come forward.

PUNCHES

The signatures are perforated by small punches in the arm. These punches are held in place by small screws which have the inside of their heads beveled. The punches are beveled slightly on one side and this beveled face must be the face next the screw head. They are easily taken out and replaced by loosening the screw slightly. Improved No. 3 punches are longer than orginal No. 3 punches and are not interchangeable with them.

TAKE-UP HOOKS

The take-up hook with swing latch should be set so that the back edge (which is the edge to the right facing the machine) of the body of the hook bears against the right-hand side of the hole in the presser plate through which the take-up hooks pass in their downward motion. This allows the thread from the needle to pass over the hook of the latch as the needle enters the signature. The amount of thread taken up by the take-up hooks is determined by their upward motion: this can be varied by the two check nuts on the end of the rod connecting the slide that operates the take-up hooks in conjunction with the operating lever.

TAK

The take-up spring
threads tight when th
movement and should
complish this purpose.

THE

The thread take-up
loopers and should also
so that the curved need
pull any thread throug
plished by adjusting th

Careful attention sh
well lubricated using nu
the best results.

TAKE-UP SPRINGS

The take-up springs are for the purpose of keeping the threads tight when the curved needle makes its backward movement and should be adjusted tight enough to accomplish this purpose.

THREAD TAKE-UP

The thread take-up takes up the loops cast off from the loopers and should also take enough thread from the spools so that the curved needle on entering the signature does not pull any thread through the tension. This can be accomplished by adjusting the take-up crank.

OILING

Careful attention should be paid to keeping the machine well lubricated using number one machine oil only to insure the best results.

INDEX OF PARTS

No.		Page
7-176	Needle Arbor	24
7-177	Needle Pinion	24
7-138	Needle Pinion Pin	24
7-494	Back Needle Guide	24
7-214	Front Needle Guide	24
7-299	Needle	24
7-325	Rest on Needle Block	24
7-496	Needle Driver	24
7-175	Looper Binder	24
7-234	Looper	24
7-179	Hook and Holdback Slide Block	24
7-210	Take-up Hook	24
7-209	Holdback	24
7-202	Braider Thread Carrier	24
7-667	Head Holdback Guide	24
7-178	Dovetail Slide	
7-197	Shoe for Wedge	
7-63	Platform Finger Slotter Lever	25
7-348	Looper Etc., Cam Roll 5/8"	25
7-25	Finger for Clutch	25
7-206	R. H. Knife	25
7-535	Header Cam	25
7-207	L. H. Knife	25
7-66	Platform Clamp Stud	25
7-164	Needle Lever Cam Roll Stud	25
7-167	Braider Cam Roll Stud	25
7-235	Take-up Spring	

No.	
7-468	Take-up Crank.
7-23	Wedge .....
7-93	Spring Fastener
7-47	Presser Bar Pin
7-65	Platform Clamp
7-73	Eccentric Bushi
7-760	Thread Tension
7-183	Braider Slide C
7-196	Segment Cam R
7-515	Arm Screw Bu
7-140	Double Spanne
7-352	Elevating Arm
7-351	Needle Cam
7-656	Segment Cam
7-715	Signature Arm
7-691	Signature Arm
7-544	Thread Tensi
7-692	Signature Arm
7-693	Signature Arm
7-199	Presser Plate
7-345	Tension Plat
7-510	Arm Blocks,
7-520	Arm Blocks,
7-680	Signature A
7-516	Signature A
7-607	Arm Slide S
7-492	Arm Slide S
7-141	Pin for Fr
7-435	Arm Slide v
7-526	Header Lat
7-203	Platform F
7-105	Platform F

INDEX OF PARTS

No.		Page
7-468	Take-up Crank	26
7-23	Wedge	26
7-93	Spring Fastener on Brace	26
7-47	Presser Bar Pinion	26
7-65	Platform Clamp Lever	26
7-73	Eccentric Bushing	26
7-760	Thread Tension Cone Springs	26
7-183	Braider Slide Conn. Stud	26
7-196	Segment Cam Roll Stud	26
7-515	Arm Screw Bushing	26
7-140	Double Spanner	26
7-352	Elevating Arm Cam Roll	27
7-351	Needle Cam Roll	27
7-656	Segment Cam Roll	27
7-715	Signature Arm Block Long for Round Punches	27
7-691	Signature Arm Block, Short, for Round Punches	27
7-544	Thread Tension and Tape Box Spring	27
7-692	Signature Arm Punch Round, Center Point	27
7-693	Signature Arm Punch Round, Side Point	27
7-199	Presser Plate	27
7-345	Tension Plate	27
7-510	Arm Blocks, Long for Flat Punches	28
7-520	Arm Blocks, Short for Flat Punches	28
7-680	Signature Arm Punch Flat, S.P.	28
7-516	Signature Arm Punch Flat, C.P.	28
7-607	Arm Slide Spring Flat	28
7-492	Arm Slide Spring Coil	28
7-141	Pin for Friction	28
7-435	Arm Slide with Flat Spring	28
7-526	Header Latch	28
7-203	Platform Finger Extension	28
7-105	Platform Finger Plain	28

INDEX OF PARTS

No.		Page
7-302	Platform Support Bracket	29
7-153	Punch Lever Hook or Grab Hook	29
7-504	Arm Heel Piece	29
7-278	Take-up Square Connection	29
7-280	Crank Roll Stud	29
7-237	Friction Spring	29
7-155	Elevating Lever Stud	29
7-186	Braider Lever Connection Stud	29
7-356	Looper Bar Collar Pin	29
7-42	Arm Top Disc	30
7-233	Looper Bar Tilting Shell	30
7-114	L. H. Knife Holder	30
7-51	Adjusting Clamp	30
7-75	Needle Lever Connection	30
7-71	Looper and Take-up Bar Brackets	30
7-194	Stud for Inside Cam Lever	30
7-76	Arm Guide	30
7-44	Arm Disc Swivel	30
7-120	Gummer Feed Wheel	30
7-276	Spring on Platform	30
7-64	Platform Long Lever	30
7-243	Fork Shipping Lever Spring	30
7-268	Presser Bar Rack	30
7-49	Rack Box	30
7-50	Presser Bar	31
7-521	Arm Punch Holder Slide	31
7-701	Presser Bar Brass Plate	31
7-518	Signature Arm Punch Holder for flat Punch whenever Signature Arm Punch Holder is wanted for Round Punch order 7-714	31
7-373	Braider Slide	31
7-156	Hook and Holdback Slide	31
7-147	Presser Bar Plunger	31
7-223	Braider Connection Rod with Ends	31

No.	
7-513	Signature Arm Blo
7-400	Looper Binder Sc
7-569	Signature Arm Bu
7-608	Arm Slide Spring
7-671	Rest on Needle B
7-564	Presser Bar Plate
7-398	Platform Finger S
7-413	Presser Plate Scr
7-517	Signature Arm Pu
7-428	Tension Stand Ro
7-427	Platform Finger F
7-412	Hook and Holdba
7-668	Head Holdback C
7-425	Bell Crank Stop S
7-536	Header Cam Scre
7-528	Knife Holder Lat
7-430	Platform Finger
7-429	Scraper Screw...
7-363	Needle Block Pi
7-346	Tension Stud ..
7-434	Hook Shedding P
7-395	Presser Bar Adju
7-414	Presser Bar Pinio
7-558	Hook and Holdb
7-401	Header Clamp S
7-417	Needle Arbor Etc
7-410	Platform Finger
7-181	Braider Slide Sc
7-409	Presser Bar Scr
7-411	Presser Bar Rack
7-418	Braider Thread C
7-157	Needle Rack Etc.
7-315	Clamp Lever Etc
7-419	Presser Bar Fing
7-422	Platform and Kn
7-546	Signature Arm D
7-669	Thread Tension

INDEX OF PARTS

No.		Page
7-513	Signature Arm Block Screw	32
7-400	Looper Binder Screw	32
7-569	Signature Arm Bushing Screw	32
7-608	Arm Slide Spring Screw	32
7-671	Rest on Needle Block Screw	32
7-564	Presser Bar Plate Screw	32
7-398	Platform Finger Set Screw	32
7-413	Presser Plate Screw	32
7-517	Signature Arm Punch Screw	32
7-428	Tension Stand Rod Etc. Screw	32
7-427	Platform Finger Rod Screw	32
7-412	Hook and Holdback Dovetail Slide Screw	32
7-668	Head Holdback Guide Screw	32
7-425	Bell Crank Stop Screw	32
7-536	Header Cam Screw	32
7-528	Knife Holder Latch Screw	32
7-430	Platform Finger Extension Screw	32
7-429	Scraper Screw	32
7-363	Needle Block Pin	32
7-346	Tension Stud	32
7-434	Hook Shedding Pin	32
7-395	Presser Bar Adjusting Clamp Etc., Screw	33
7-414	Presser Bar Pinion Screw	33
7-558	Hook and Holdback Slide Block Screw	33
7-401	Header Clamp Screw	33
7-417	Needle Arbor Etc., Screw	33
7-410	Platform Finger Screw	33
7-181	Braider Slide Screw	33
7-409	Presser Bar Screw	33
7-411	Presser Bar Rack Box Screw	33
7-418	Braider Thread Carrier Etc., Screw	33
7-157	Needle Rack Etc., Screw	33
7-315	Clamp Lever Etc., Screw	33
7-419	Presser Bar Finger Etc., Screw	33
7-422	Platform and Knife Holder Screw	33
7-546	Signature Arm Disc Screw	33
7-669	Thread Tension Screw	33

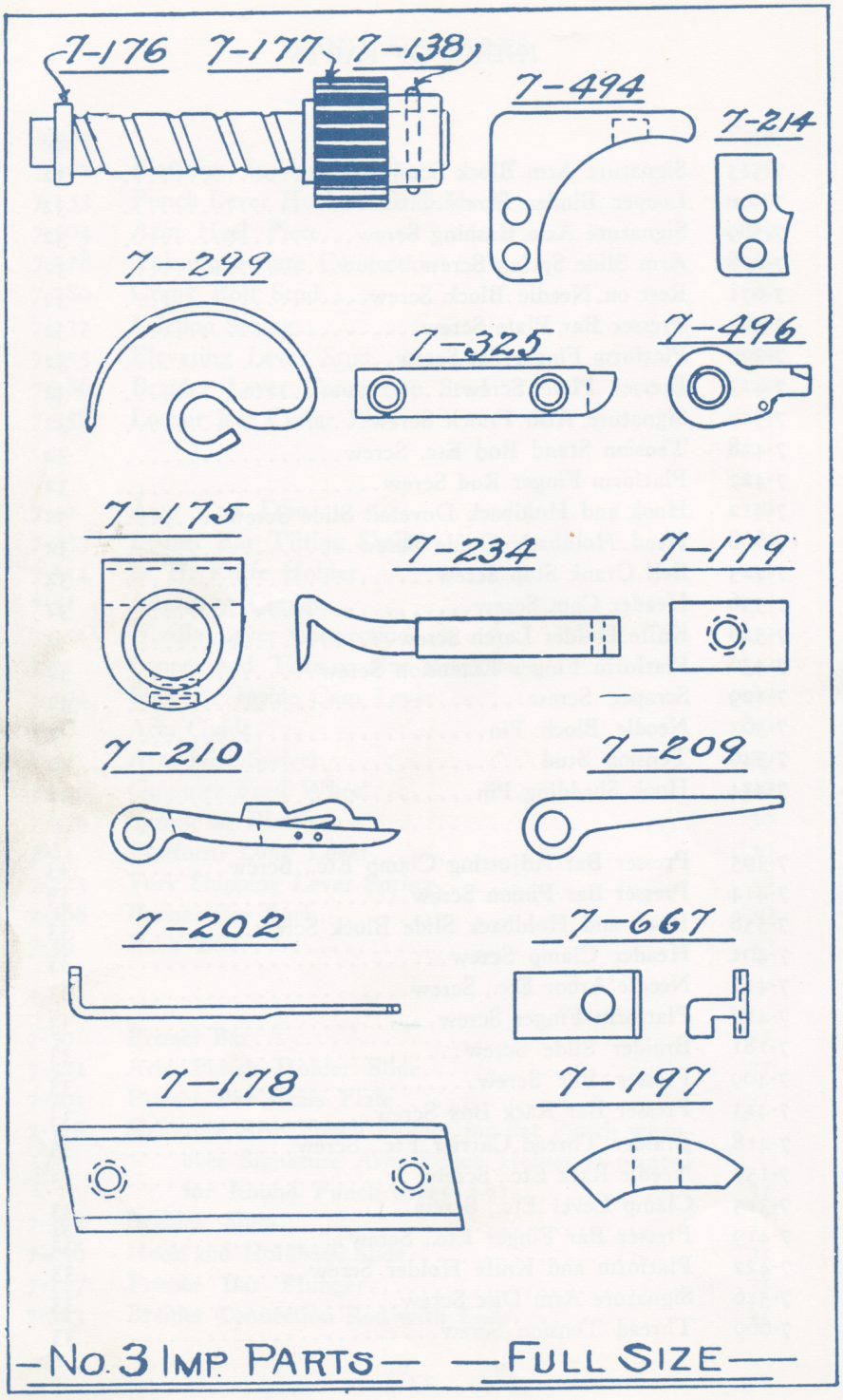
7-176
7-177
7-138
7-494
7-214
7-299
7-325
7-496
7-175
7-234
7-179
7-210
7-209
7-202
7-667
7-178
7-197
-No. 3 Imp Parts- -Full Size-

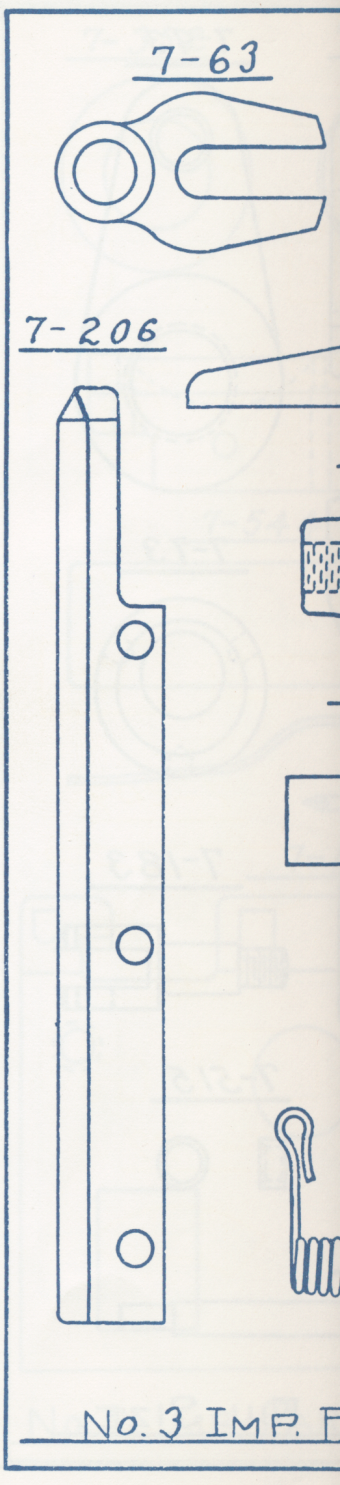
7-63
7-206
No. 3 Imp. P

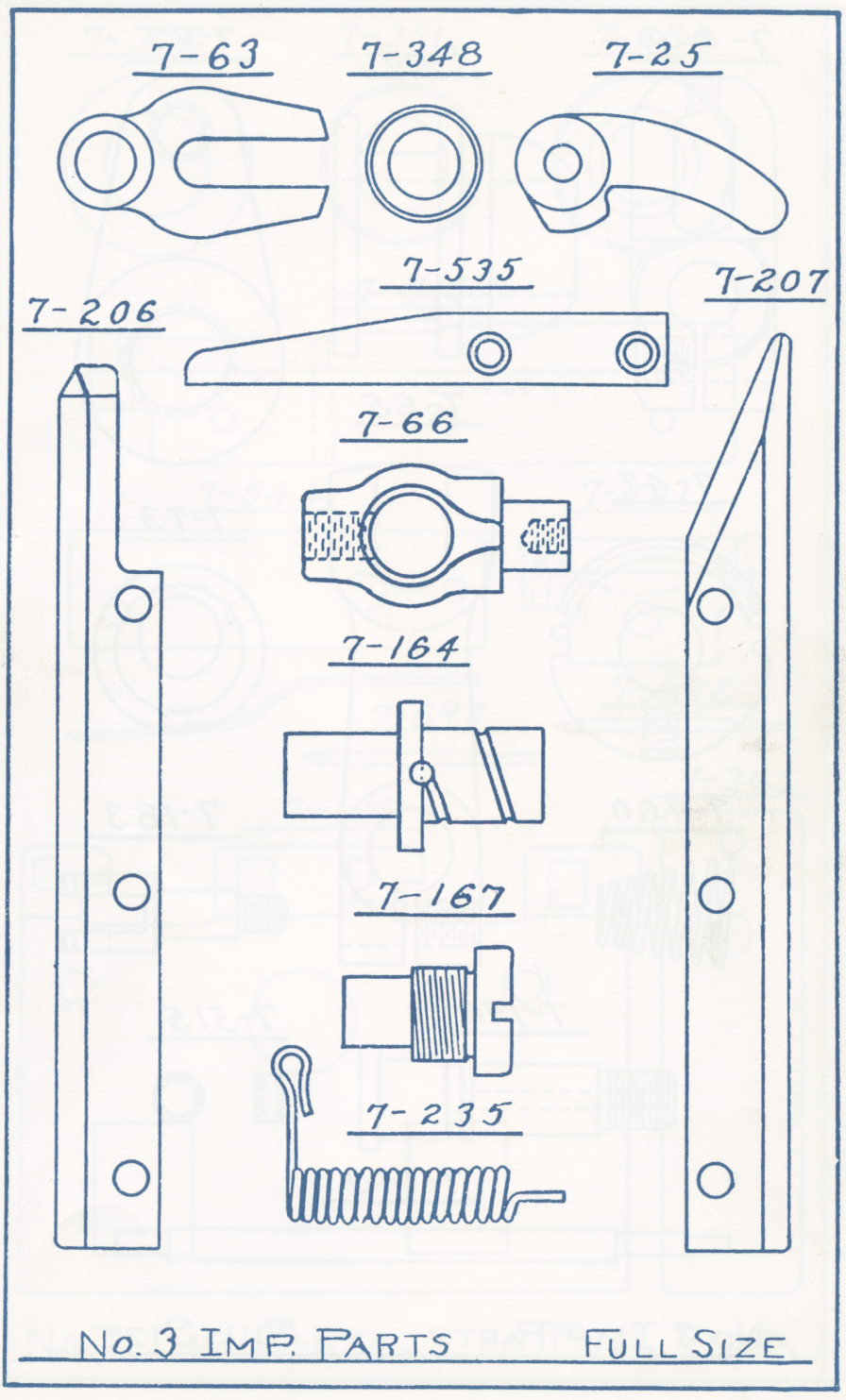

No. 3 Imp. Parts Full Size

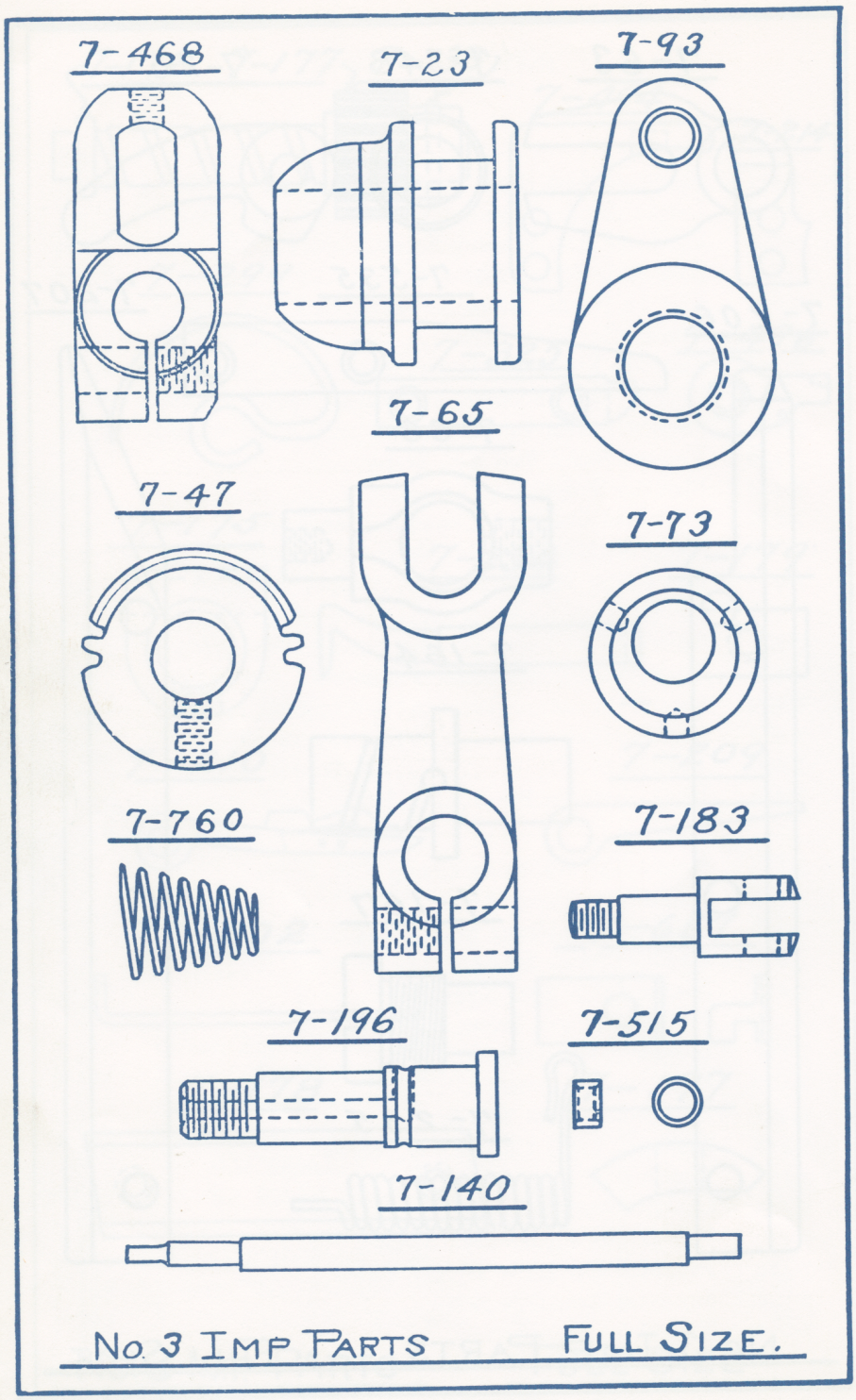

No. 3 Imp Parts Full Size.

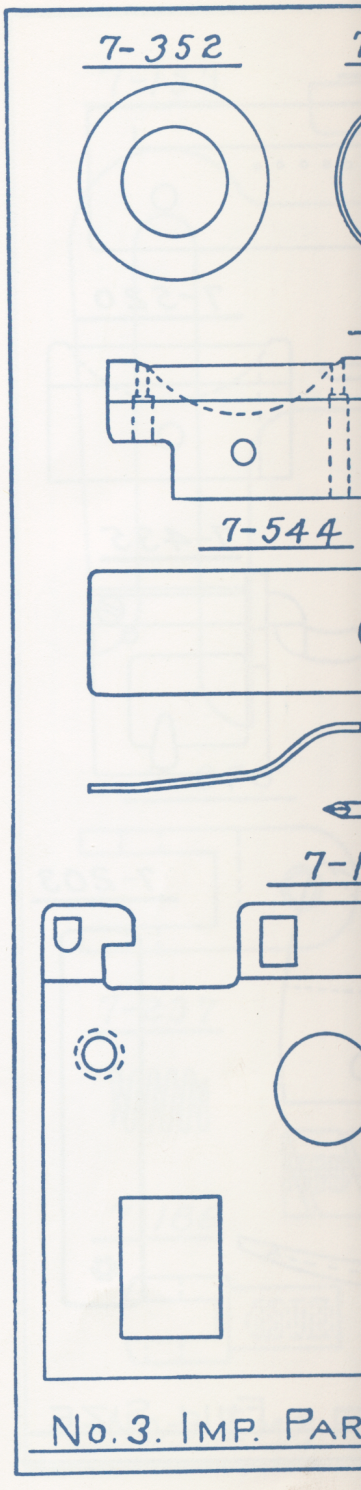

No. 3. Imp. Par

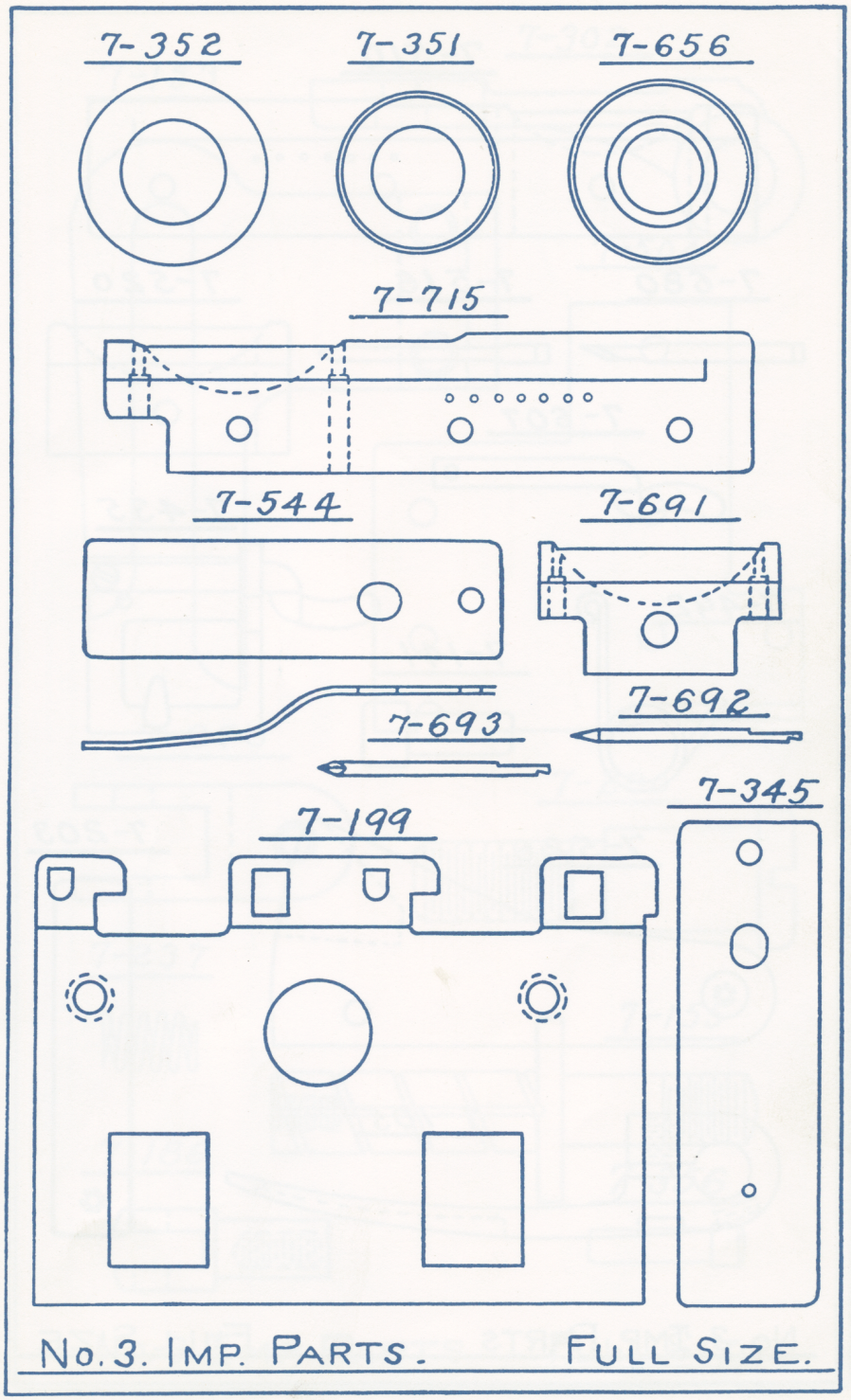

No. 3. Imp. Parts. Full Size.

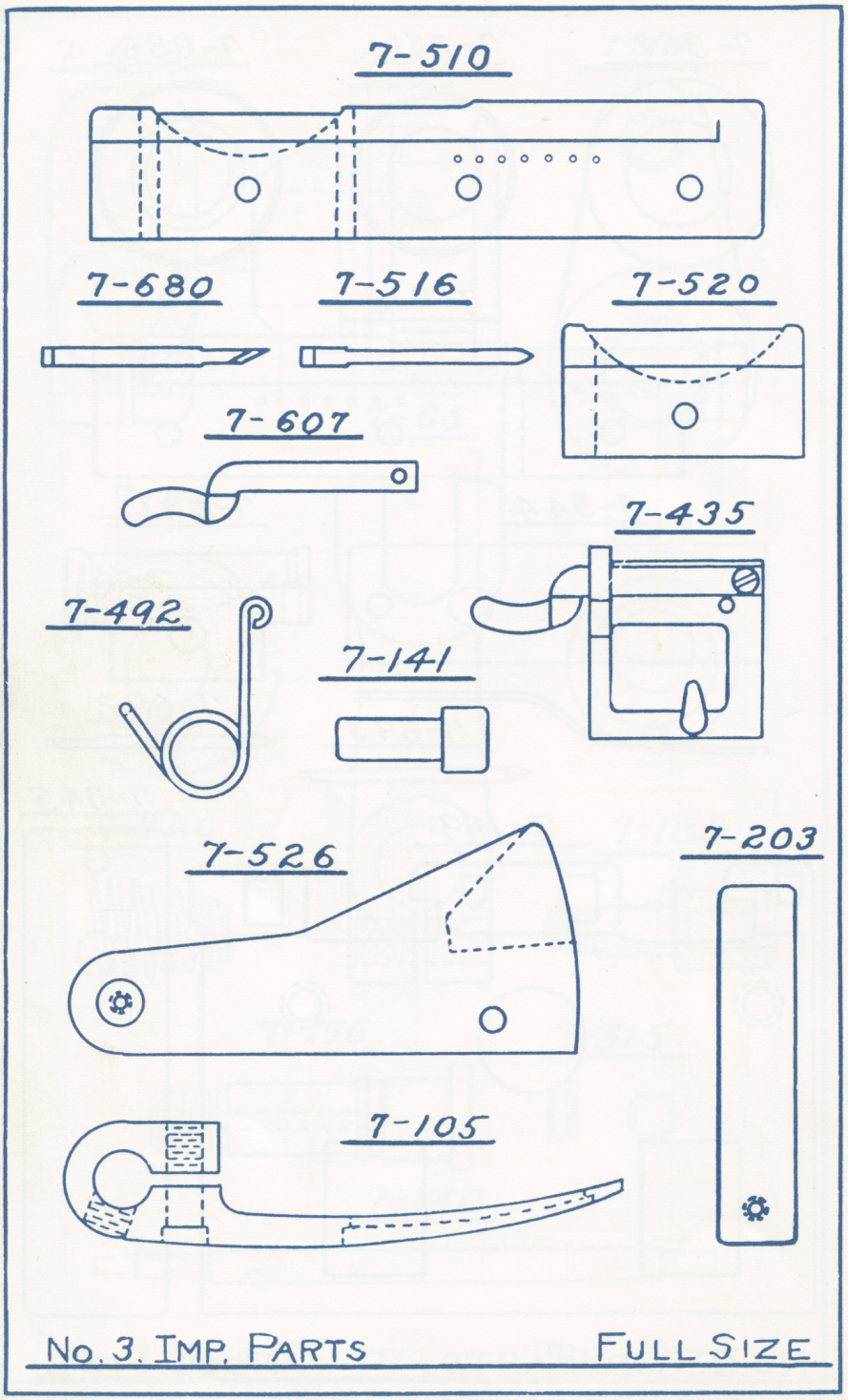

No. 3. IMP. PARTS FULL SIZE

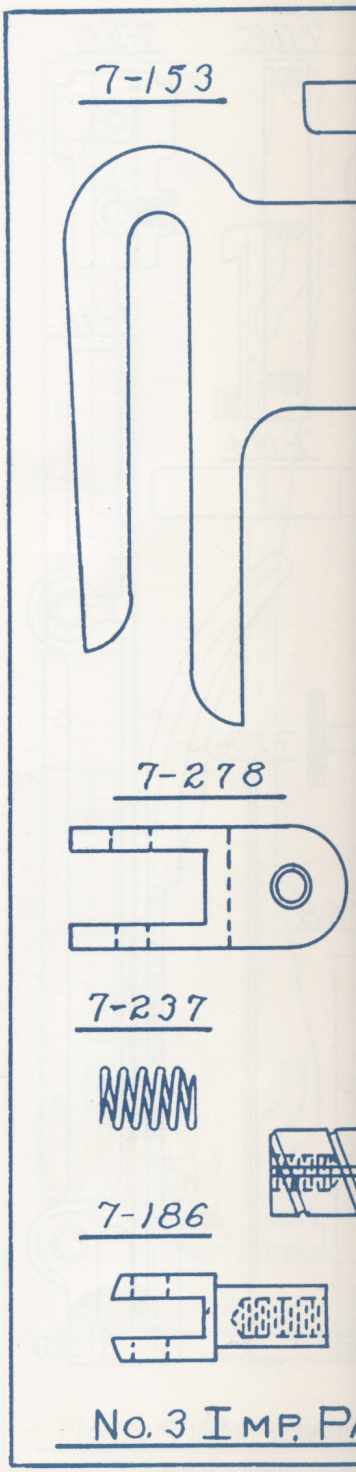

NO. 3 IMP. P

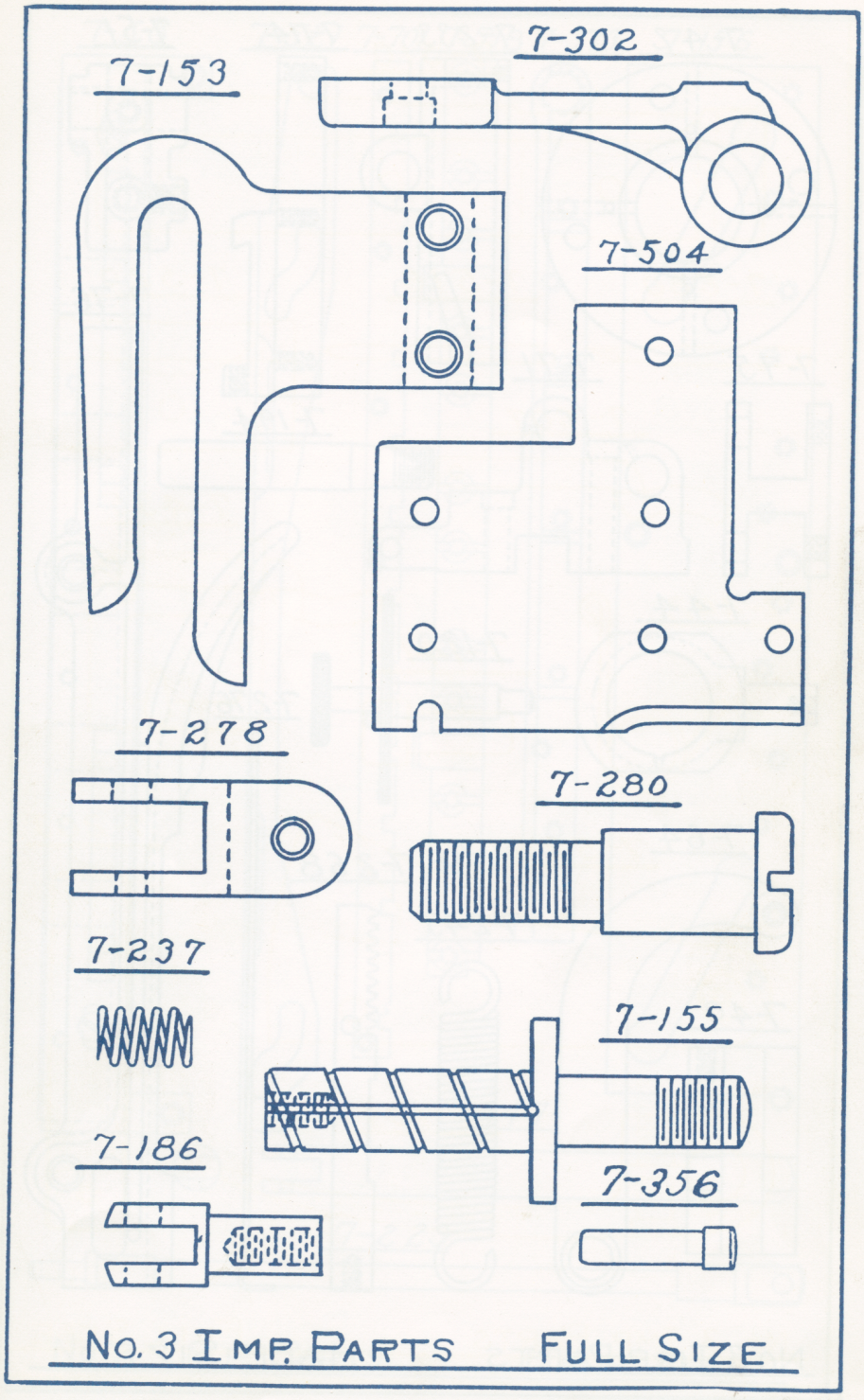

No. 3 Imp. Parts Full Size

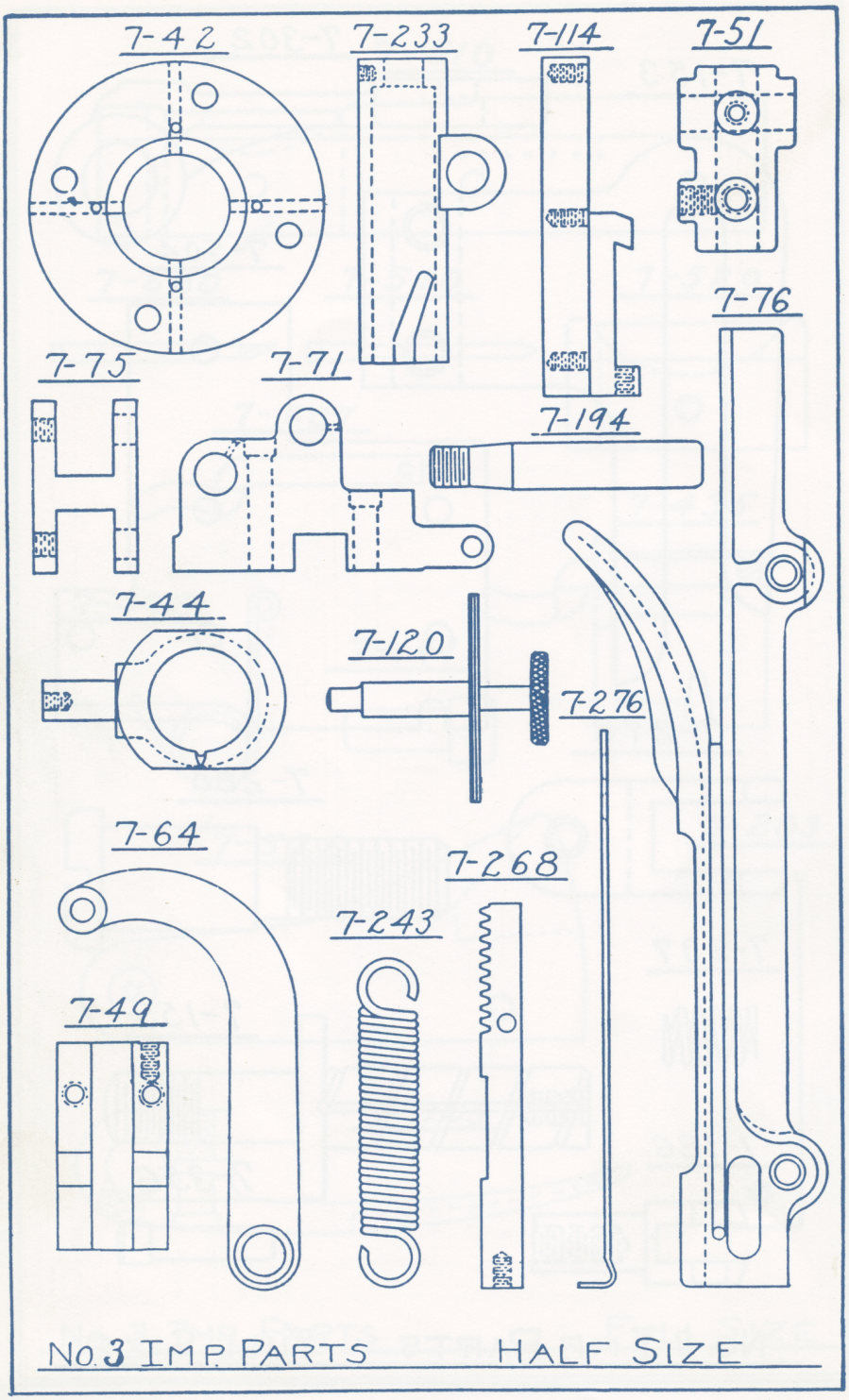

No. 3 IMP PARTS HALF SIZE

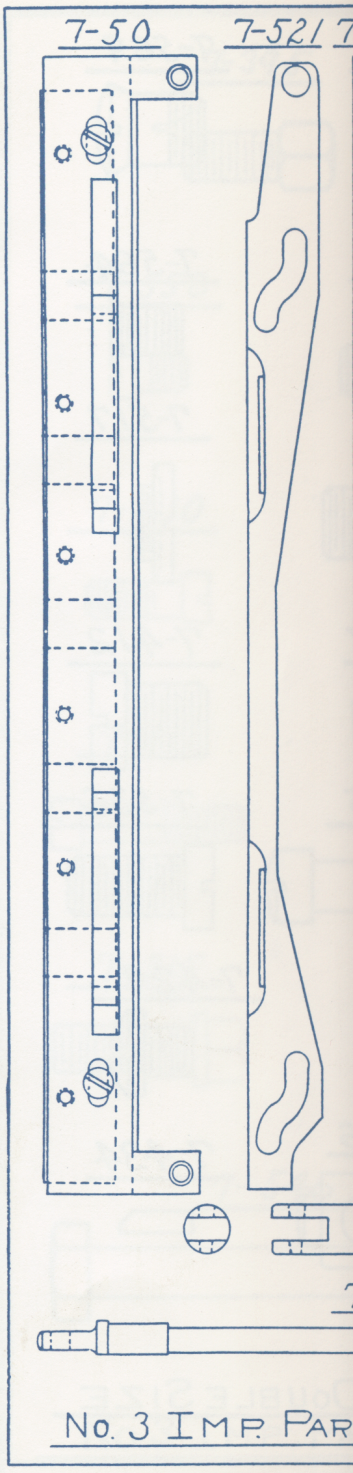

No. 3 IMP PAR

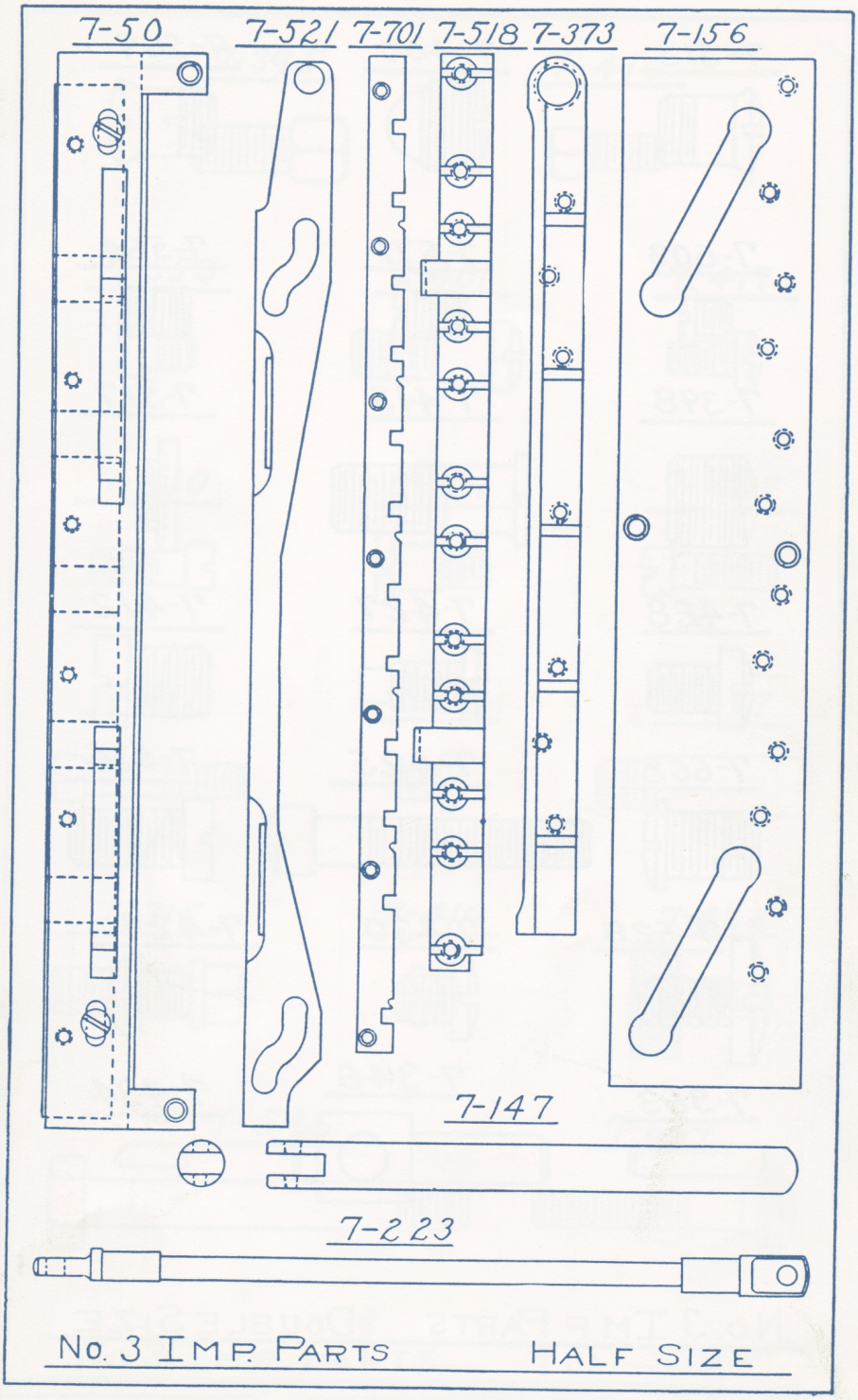

No. 3 IMP. PARTS HALF SIZE

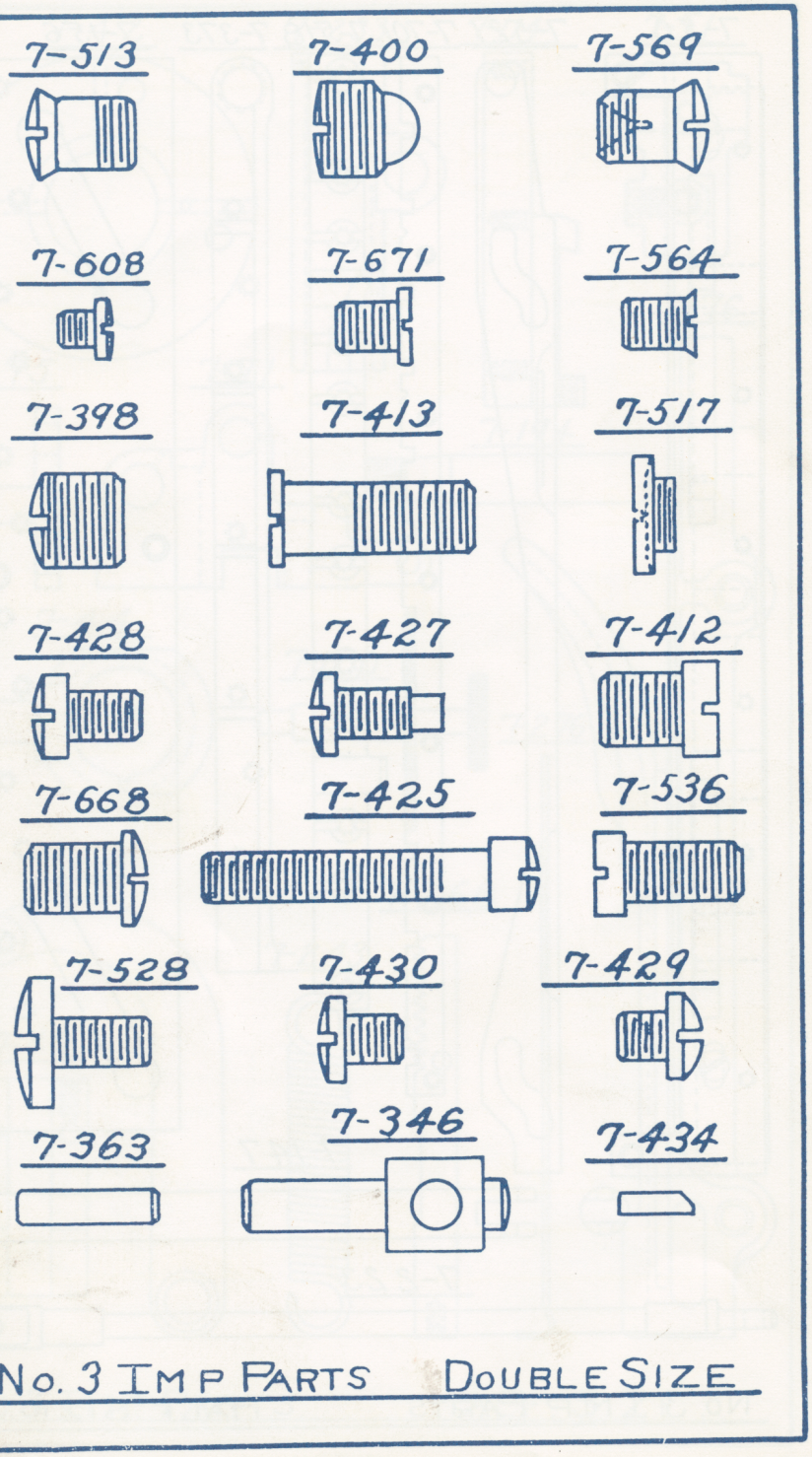

No. 3 IMP PARTS DOUBLE SIZE

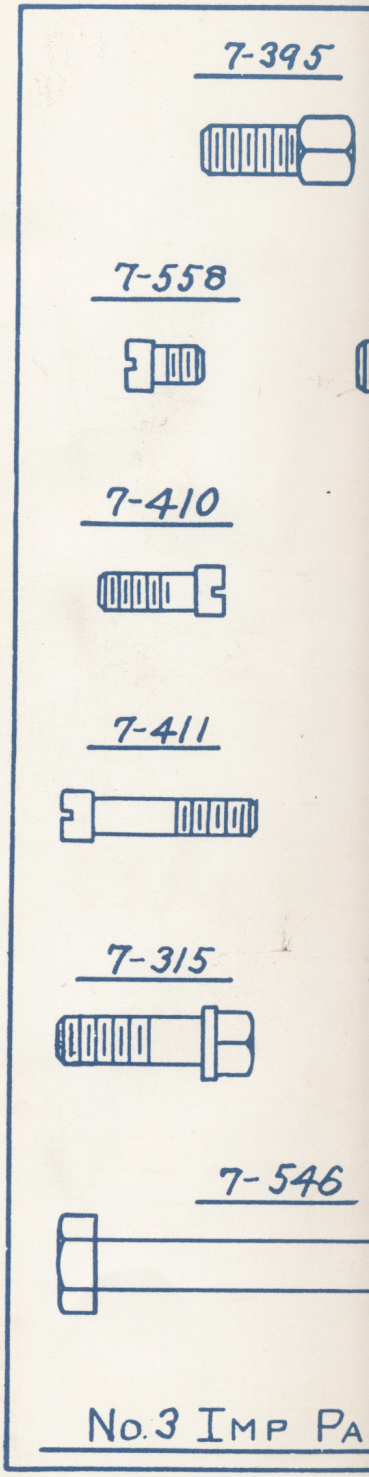

No. 3 IMP PA

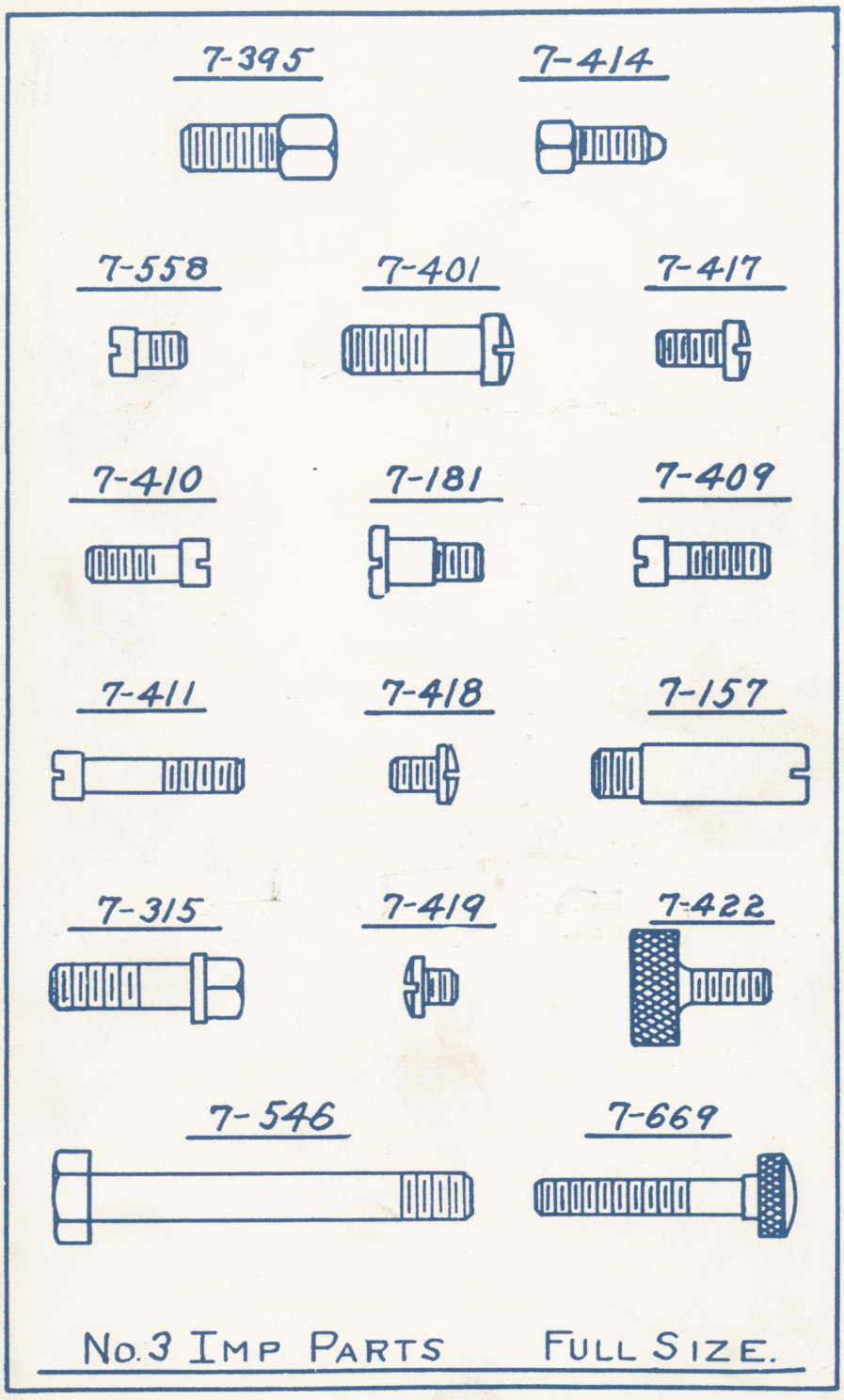

No. 3 Imp Parts Full Size.