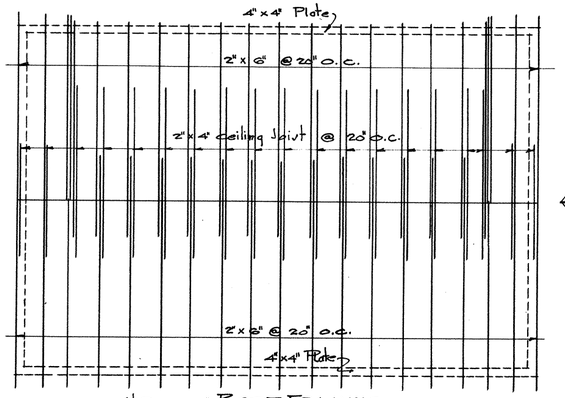


• ROOF FRAMING •

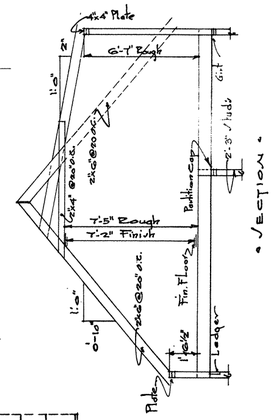


• SECTION •

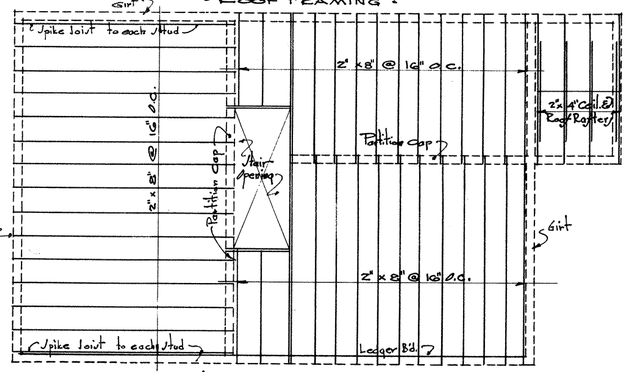


• SECOND FLOOR FRAMING •

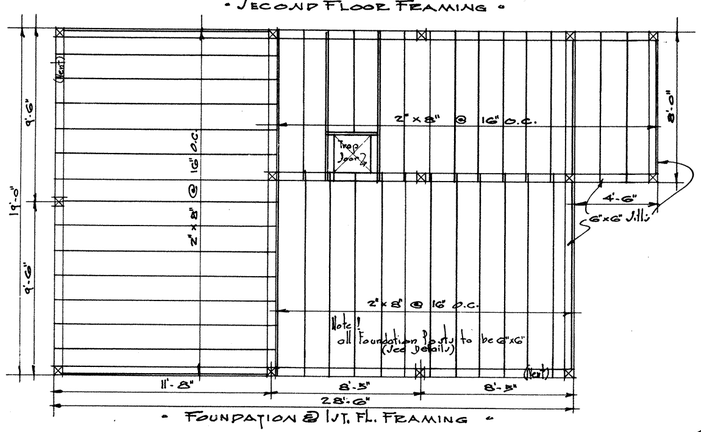


• FOUNDATION & 1ST. FL. FRAMING •

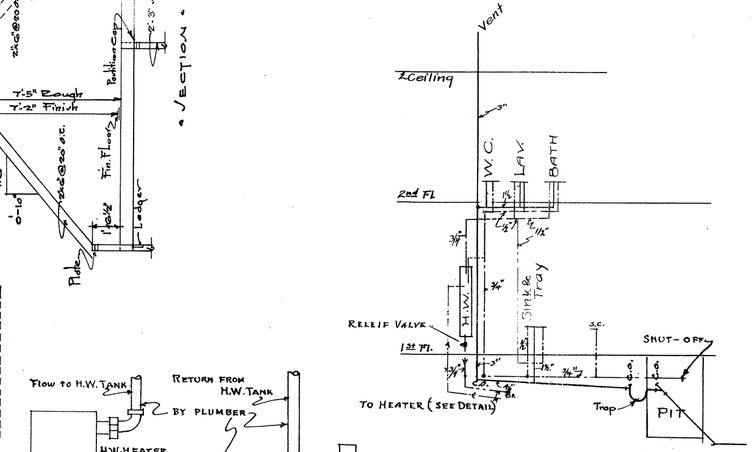


PLUMBING DIAGRAM

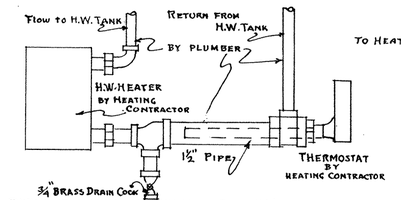


DETAIL OF H.W. HEATER-THERMOSTAT INSTALLATION

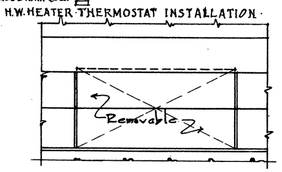


• Elevation •

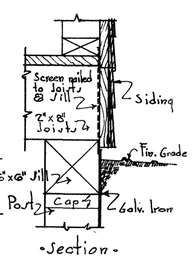


• Section •

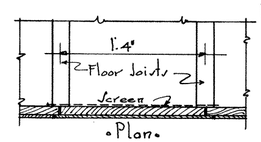


• Plan •

• DETAIL of VENTS •
• Scale 1 1/2" = 1'-0" •

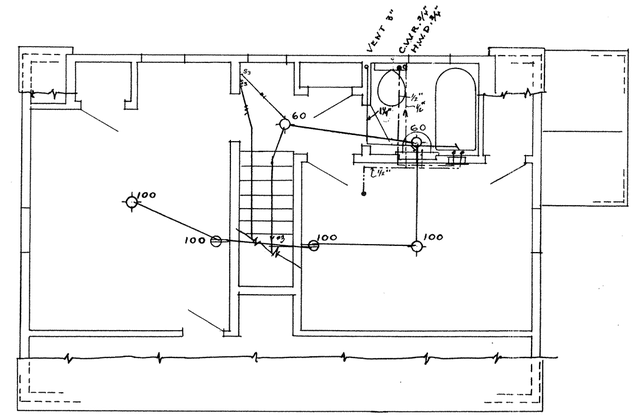


SECOND FLOOR PLAN

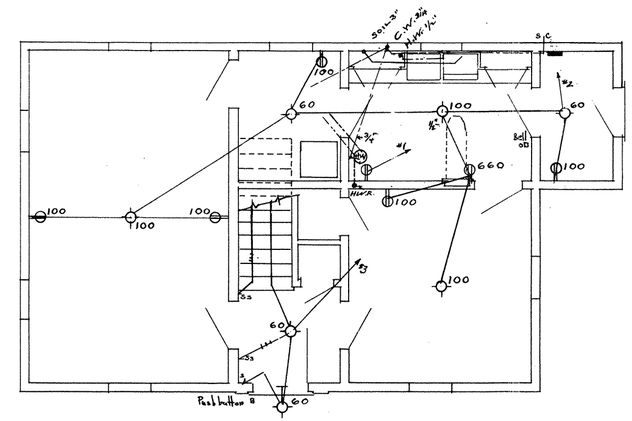


FIRST FLOOR PLAN




• FOUNDATION & 1ST. FL. FRAMING •

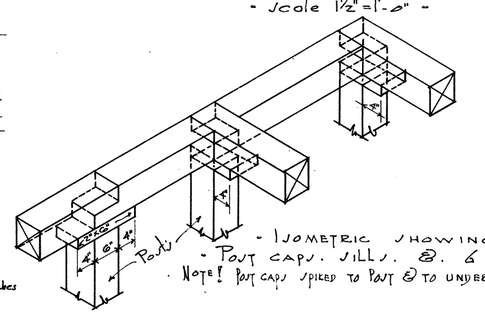


• ISOMETRIC SHOWING •
• POST CAPS. SILLS. & GIRDERS •
NOTE! POST CAPS SPIKED TO POST & TO UNDERSIDE OF SILLS & GIRDERS.

PLUMBING SYMBOLS
- SOIL LINES
- COLD WATER
- HOT WATER
- HOT WATER CIR.

ELECTRICAL SYMBOLS
- 2 #14 WIRE, BX
- 3 #14 WIRE, BX (UNLESS OTHERWISE NOTED)
- CEILING OUTLET
- WALL OUTLET
- RECEPTACLE
- DUPLEX RECEPTACLE
- DISTRIBUTION PANEL BOX.

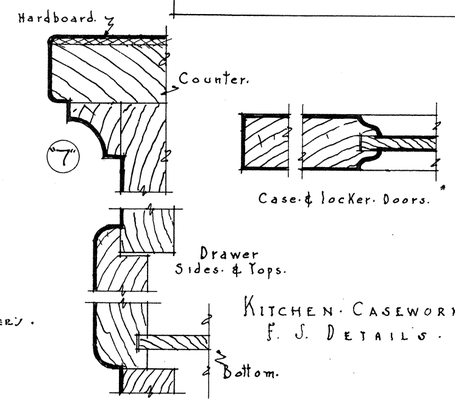


KITCHEN CASEWORK.
F. S. DETAILS.

• 1 1/2" Graphic Scale •

• FULL SIZE Graphic Scale •

PASSAMAQUODDY BAY
TIDAL POWER DEVELOPMENT
TEMPORARY BUILDINGS
TYPE B

Sheet # 2 of 4 sheets Date Aug. 1935.
UNITED STATES ENGINEER OFFICE
EASTPORT, MAINE
JOHN P. THOMAS, A. I. A.
ARCHITECT
PORTLAND, MAINE
Submitted by [signature] C. of E. U.S.A.
Approved [signature] Major, C. of E. U.S.A. District Engineer

Q-A-20/6