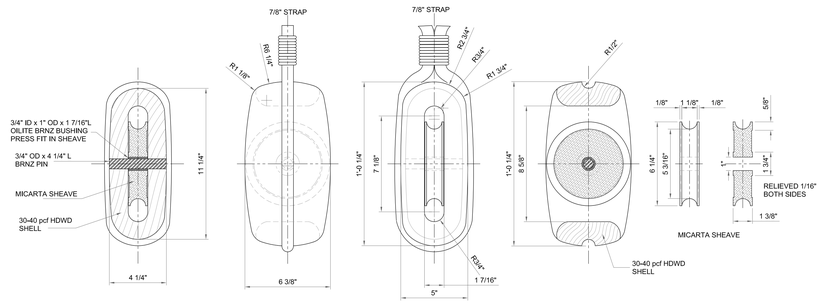

DETAIL: I-71
1" SINGLE SHELL BLOCK
ONE QUARTER SIZE
6 Required + 4 Spare

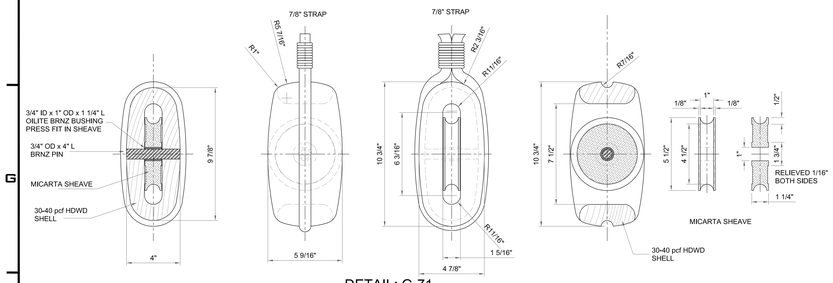

DETAIL: G-71
7/8" SINGLE SHELL BLOCK
ONE QUARTER SIZE
46 Required + 6 Spare

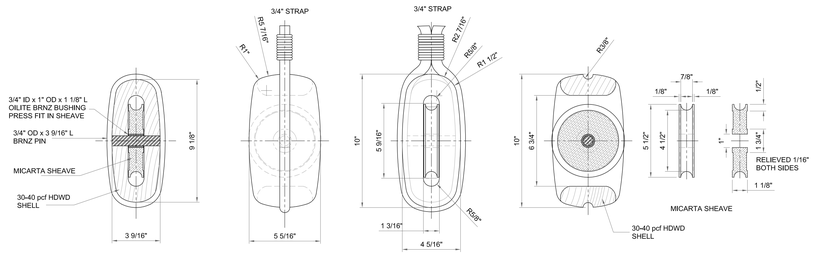

DETAIL: E-71
3/4" SINGLE SHELL BLOCK 48 Required + 6 spares
ONE QUARTER SIZE

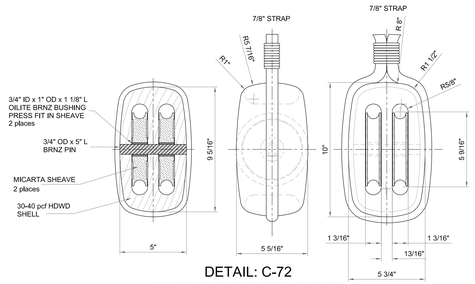

DETAIL: C-72
3/4" DOUBLE SHELL BLOCK
ONE QUARTER SIZE
2 Required + 2 Spares

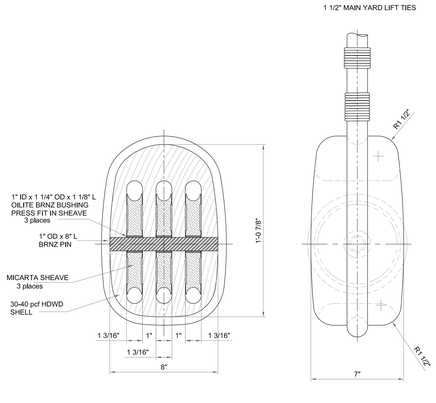

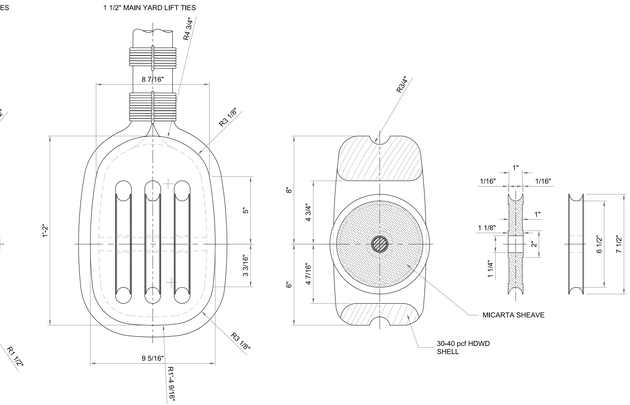

DETAIL: H-68
7/8" TRIPLE SHELL BLOCK - MAIN YARD HALLIARD
AND MIZZEN LATEEN YARD HALLIARD
ONE QUARTER SIZE

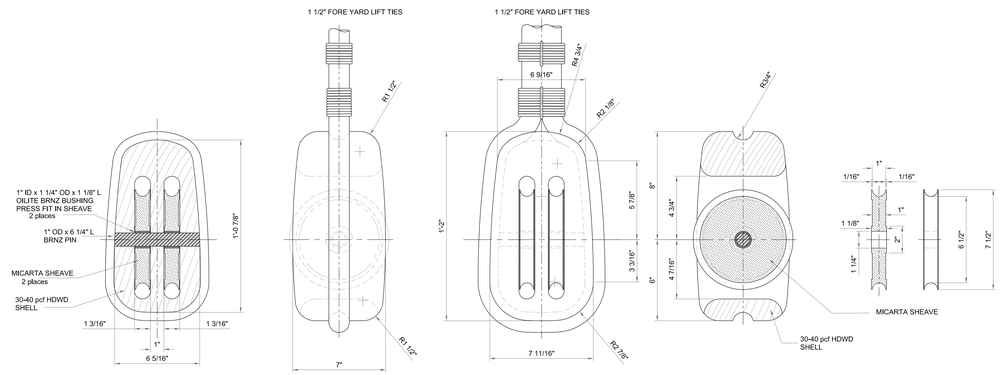

DETAIL: F-68
7/8" DOUBLE SHELL BLOCK - FORE YARD HALLIARD
ONE QUARTER SIZE

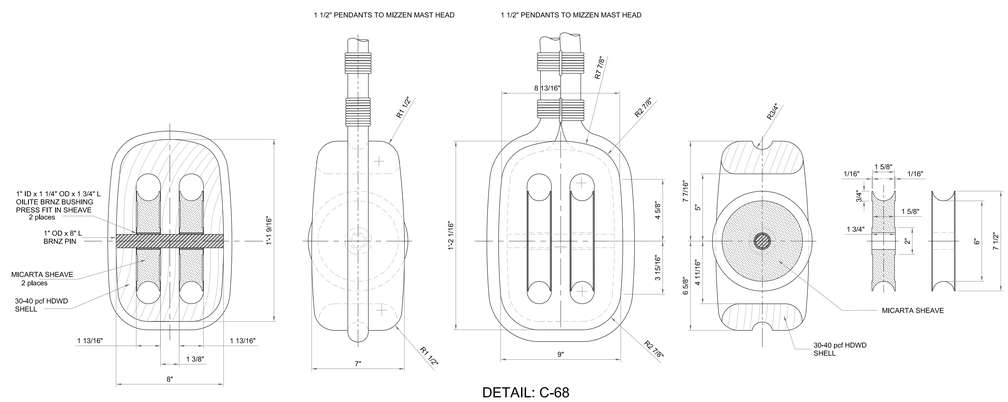

DETAIL: C-68
1 1/2" DOUBLE SHELL BLOCK - LATEEN YARD TIES
ONE QUARTER SIZE

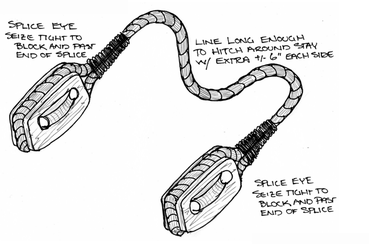

DETAIL: A-72
TWIN SHELL BLOCK STRAP FOR STAY ATTACHMENT
NO SCALE

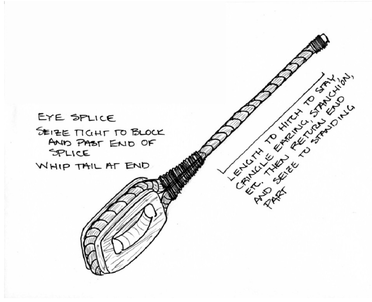

DETAIL: A-70
SHELL BLOCK STRAP WITH TAIL
NO SCALE

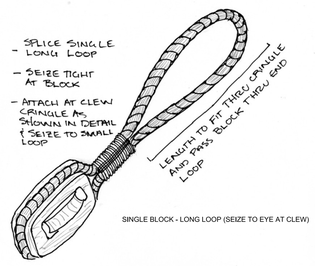

DETAIL: A-69
SHELL BLOCK STRAP WITH LONG LOOP
NO SCALE

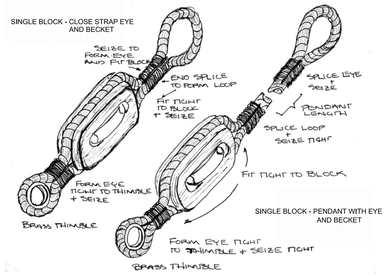

DETAIL: A-68
SHELL BLOCK STRAP WITH EYE AND BECKET
NO SCALE

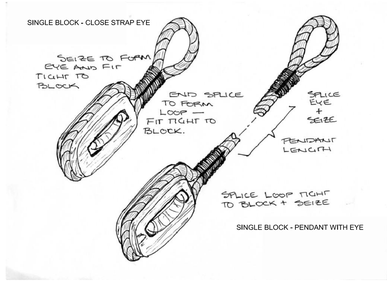

DETAIL: A-67
SHELL BLOCK STRAP WITH EYE AND PENDANT
NO SCALE

Function	Dtl. No.	Line Size	Location	Reference Number	Strap Configuration	No. Req'd
Lateen Yard Nock Line	E-71	3/4"	Sht 5: G-36	LYNL-2	A-68: Close Eye w/ Becket	2
Lateen Yard Nock Line	C-72	3/4"	Sht 5: D-39	LYNL-3	DBL A-67: Close Eye w/ Hook	2
Lateen Yard Shift Tackle	E-71	3/4"	Sht 5: G-36	LYST-2	A-68: Close Eye w/ Becket	2
Lateen Yard Shift Tackle	E-71	3/4"	Sht 5: D-39	LYST-3	A-68: Close Eye w/ Hook	2
Lateen Sail Sheet	G-71	7/8"	Sht 5: A-35	LSS-2	A-69: Long Loop	1
Lateen Sail Sheet	G-71	7/8"	Sht 5: A-35	LSS-3	A-68: Close Eye w/ Becket	1
Lateen Yard Lift	H-68	7/8"	Sht 5: F-38	LYL-4	TIES seized to block	1
Lateen Yard Top Lift	I-71	1"	Sht 5: E-36	LYTL-3	A-67; Long Pendant w/ Eye	1
Lateen Yard Top Lift	I-71	1"	Sht 5: E-36	LYTL-4	A-70: Tail attached to Stay	1
Lateen Yard Halliard	C-68	1 1/2"	Sht 5: A-37, F-38	LYL-2	DBL A-67: Pendant w/ Eye	1
Main Sail Martnets	E-71	3/4"	Sht 7: E-55	MSM-3	A-50: Tail and Eye	2
Main Sail Clew Line	G-71	7/8"	Sht 7: E-55	MSCL-3	A-50: Tail and Eye	2
Main Sail Clew Line	G-71	7/8"	Sht 7: A-56	MSCL-2	A-67: Close Eye	2
Main Sail Tack Line	G-71	7/8"	Sht 7: A-56	MSTL-2	A-67: Close Eye	2
Main Sail Tack Line	G-71	7/8"	Sht 1: D-4	MSTL-4	A-67: Close Eye w/ Thimble	2
Main Yard Brace	G-71	7/8"	Sht 1: G-5, Sht 2: J-16	MYB-2	A-67: Long Pendant and Eye	2
Main Yard Top Lift	G-71	7/8"	Sht 3: F-22	MYTL-2	A-68: Pendant w/ Eye + Becket	2
Main Yard Top Lift	G-71	7/8"	Sht 3: F-22	MYTL-3	A-67: Close Eye	2
Main Yard Halliard	H-68	7/8"	Sht 3: F-22	MYL-3	TIES seized to block	1
Main Sail Sheet	I-71	1"	Sht 7: A-56	MSS-2	A-69: Long Loop	2
Main Top Sail Martnets	E-71	3/4"	Sht 7: E-55	MTM-3	A-50: Tail and Eye	2
Main Top Sail Clew Line	E-71	3/4"	Sht 7: E-55	MTCL-3	A-50: Tail and Eye	2
Main Top Sail Clew Line	E-71	3/4"	Sht 7: A-56	MTCL-2	A-67: Close Eye	2
Main Top Sail Tack Line	G-71	7/8"	Sht 1: H-4	MTS-2	A-67: Close Eye	2
Main Top Sail Tack Line	G-71	7/8"	Sht 1: H-5	MTS-3	A-50: Tail and Eye	2
Main Top Yard Brace	E-71	3/4"	Sht 1: I-6, Sht 2: H-16	MTYB-2	A-67: Long Pendant and Eye	2
Main Top Yard Top Lift	E-71	3/4"	Sht 3: F-18, D-19	MTYTL-2	A-67: Short Pendant and Eye	2
Main Top Yard Lift	E-71	3/4"	Sht 3: F-18	MTYL-3	TIES seized to block	1
Fore Sail Martnets	E-71	3/4"	Sht 7: E-53	FSM-3	A-50: Tail and Eye	2
Fore Sail Clew Line	G-71	7/8"	Sht 7: E-53	FSCL-3	A-50: Tail and Eye	2
Fore Sail Clew Line	G-71	7/8"	Sht 7: A-54	FSCL-2	A-67: Close Eye	2
Fore Sail Tack Line	G-71	7/8"	Sht 6: F-48	FSTL-2	A-67: Close Eye	2
Fore Yard Brace	G-71	7/8"	Sht 1: G-3, Sht 2: I-16	FYB-2	A-67: Long Pendant and Eye	2
Fore Yard Brace	G-71	7/8"	Sht 1: G-5, Sht 2: I-16	FYB-3	A-72: Hitch to Stay	2
Fore Yard Top Lift	G-71	7/8"	Sht 4: F-30	FYTL-2	A-68: Pendant w/ Eye + Becket	2
Fore Yard Top Lift	G-71	7/8"	Sht 4: F-30	FYTL-3	A-67: Close Eye	2
Fore Yard Halliard	F-68	7/8"	Sht 4: F-30	FYL-3	TIES seized to block	1
Fore Sail Sheet	G-71	7/8"	Sht 7: A-56	FSS-2	A-69: Long Loop	2
Fore Top Sail Martnets	E-71	3/4"	Sht 7: E-53	FTM-3	A-50: Tail and Eye	2
Fore Top Sail Clew Line	E-71	3/4"	Sht 7: E-53	FTCL-3	A-50: Tail and Eye	2
Fore Top Sail Clew Line	E-71	3/4"	Sht 7: A-52	FTCL-2	A-67: Close Eye	2
Fore Top Sail Tack Line	G-71	7/8"	Sht 1: G-3	FTS-2	A-67: Close Eye	2
Fore Top Sail Tack Line	G-71	7/8"	Sht 1: G-4	FTS-3	A-50: Tail and Eye	2
Fore Top Yard Brace	E-71	3/4"	Sht 1: H-4, Sht 2: H-16	FTYB-2	A-67; Long Pendant and Eye	2
Fore Top Yard Brace	E-71	3/4"	Sht 1: H-4, Sht 2: H-16	FTYB-3	A-72: Hitch to Stay	2
Fore Top Yard Top Lift	E-71	3/4"	Sht 4: G-27, D-28	FTYTL-2	A-67: Short Pendant and Eye	2
Fore Top Yard Lift	E-71	3/4"	Sht 3: F-18	FTYL-3	TIES seized to block	1
Sprit Sail Leech Line	E-71	3/4"	Sht 7: H-50	SSLL-3	A-50: Tail and Eye	2
Sprit Sail Leech Line	E-71	3/4"	Sht 7: H-50	SSLL-2	A-70: Tail Hitch to Cringle	2
Sprit Sail Sheet	G-71	7/8"	Sht 7: F-49	SSS-2	A-69: Long Loop	2
Sprit Yard Brace	E-71	3/4"	Sht 6: G-44, J-48	SYB-2	A-68:Pendant w/Eye + Becket	2
Sprit Yard Brace	E-71	3/4"	Sht 6: G-44, B-44	SYB-3	A-67: Close Eye	2
Sprit Yard Top Lift	E-71	3/4"	Sht 6: G-44, B-44	SYTL-2	A-67: Close Eye	2
Sprit Yard Top Lift	E-71	3/4"	Sht 6: G-44, B-46	SYTL-3	A-72: Hitch to Stay	2
Bowsprit Running Stay	G-71	7/8"	Sht 6: G-46, E-46	BSRS-2	A-68: Eye to Bolt + Becket	2
Bowsprit Running Stay	G-71	7/8"	Sht 6: G-44, B-47	BSRS-2	A-67: Close Eye	2
Fore Topmast Stay	I-71	1"	Sht 6: G-46, B-47	FTMS-2	Stay Seized to Shell	1
Fore Topmast Stay	I-71	1"	Sht 6: G-46, J-48	FTMS-3	A-67: Close Eye	1

PROJECT NO.	PROJECT TITLE				
08-SS	S/V SAN SALVADOR				
DRAWING TITLE	RUNNING RIGGING DETAILS - Shell Blocks				
SCALE	UNITS	DESIGNDATE	DRAWN	SHEET	DWG NO.
as noted	IN	8 Aug 2013	DHS	09-09	09-04-103