FT-980

OPERATING MANUAL

YAESU MUSEN CO., LTD.

C.P.O. BOX 1500
TOKYO, JAPAN

Downloaded from www.Manualslib.com manuals search engine

FT—980
HF ALL MODE
COMPUTER AIDED TRANSCEIVER



GENERAL DESCRIPTION

The FT-980 CAT presents a new leap forward in the amateur field, with the highest level of microprocessor control ever offered as a standard feature in an all mode, all solid state HF transceiver. The transmitter sections operates in any mode, including full QSK CW, FM and FSK as standard, providing 100 watts nominal SSB output on all HF amateur bands. Yaesu's excellent RF speech processor is included for SSB, along with AMGC (automatic microphone gain control), two front panel meters for monitoring multiple transmitter parameters, and an IF monitor. The MRF422 final transistors, rated at 280 watts each, are supplied with 24 V, allowing specified third order distortion products 40 dB down (at 14 MHz, 100 W output).

Two independent receiver front ends, each with their own filter banks and dual, high I_{dss} JFET amplifiers provide outstanding dynamic range and optimum sensitivity for both amateur operation and short-wave DX listening in any mode, using two independent VFOs.

The unique PLL design of the FT-980 incorporates a reference oscillator with stability of ±3 ppm or better from 0 to 40°C. The dual digital display system shows operating frequency the same for all modes, with resolution to either 100 or 10 Hz on one display, and to 1 kHz on the other; a scrolling "synthesized analog" sub display for the VFOs.

The (80C85-based) 8-bit microprocessor control system includes twelve memory channels which store both frequency and mode. Each of these plus the VFOs can be tuned independently using the tuning dial, scanning or keypad systems. The scanning system includes

for free by
RadioAmateur.eu

Downloaded from www.Manualslib.com manuals search engine

either two-speed scanning in 10 Hz steps, or single or multiple stepping in 5 kHz or 500 kHz steps. The keypad system allows convenient push button frequency entry, ±10 kHz TX or RX clarifier (offset) control, split frequency operation between the VFOs and a memory, and tuning or scanning frequency limit presetting.

Additional standard features include a CW spotting switch, ALC meter peak hold for SSB, IF shift and IF width controls, IF notch and audio peak filters, 3-step receiver attenuator and provisions for optional narrow CW and AM filters, an optional internal electronic keyer, and true VHF and UHF frequency display when used with an optional transverter.

Of course, when used with an optional Yaesu Interface, many of the transceiver functions can be controlled remotely by the operator's computer, including all VFO and memory functions, IF shift and width adjustments, mode selection, clarifier and FSK shift frequency selection, and more. Interfacing and computer controlled operation details are provided in the Interface Manual.

This manual should be studied carefully in order to acquaint the operator with the wealth of the convenient operating features offered in the FT-980.

ACCESSORIES

Supplied

AC Power Cord		1
3 wire, 3 prong UL plug	(T91013282)	
3 wire, 3 prong Australian plug	(T91013283)	
3 wire, 2 prong EU plug	(T91013284)	
Spare Fuses		
AC 10A (100–117 V)	(Q0000007)	1
5A (200–234V)	(Q0000005)	
DC 13.6A	(Q0000031)	1
6A	(Q0000032)	1
Extender Feet	(R3054620)	2
Pad	(R7054630A)	4
2-pin Straight plug **SH3010** (Headphone, Key)	(P0090007)	2
3-pin Straight plug **SH3603** (Electronic Keyer)	(P0090008)	1
2-pin Small plug **C**-107 (External Speaker)	(P0090034)	1
RCA plug **STP-58**	(P0090018)	7
5-pin DIN plug **E5-702B-02**	(P0090031)	1
8-pin Microphone plug **FM-148P**	(P1090164)	1
Backup Batteries **AA size**	(Q9000105)	2

Options

CW Filter **XF-8.9HC**	(D2000011)
CW Filter **XF-455.8MCN**	(D2000035)
AM Filter **XF-8.9GA**	(D2000012)
Keyer unit	(D3000026)
Stand Microphone **MD-1$_{B8}$**	(D1000039)
Hand Microphone **MH-1$_{B8}$**	(D1000040)
Microcomputer Interface unit **FIF-80**	(D3000267)

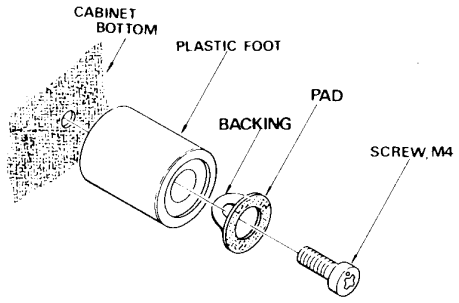

for free by
RadioAmateur.eu

Downloaded from www.Manualslib.com manuals search engine

SPECIFICATIONS

TRANSMITTER

Frequency range:

160 m band	1.5 to 1.99999 MHz
80 m band	3.5 to 3.99999 MHz
40 m band	7.0 to 7.49999 MHz
30 m band	10.0 to 10.49999 MHz
20 m band	14.0 to 14.49999 MHz
17 m band	18.0 to 18.49999 MHz
15 m band	21.0 to 21.49999 MHz
12 m band	24.5 to 24.99999 MHz
10 m band	28.0 to 29.99999 MHz

Tuning steps:
10 Hz, 5 kHz and 500 kHz (band step)

Emission types:
LSB, USB (A3J/J3E*), CW (A1/A1A*), AM (A3/A3E*), AFSK (F1/J1B*), FM (F3/F3E*)
* New emission designation per WARC '79

Power output:

	(all bands)
SSB, CW	100 W (PEP)
AM	25 W
FM, FSK	50 W

Carrier suppression:
better than 40 dB below peak output

Unwanted side band suppression:
better than 50 dB below peak output (1 kHz tone)

Spurious radiation:
better than 50 dB below peak output

Audio response:
better than −6 dB from 250 Hz to 2750 Hz

3rd order intermodulation distortion:
better than −40 dB below peak output (14 MHz, 100 W)

Frequency accuracy:
better than ±3 ppm from 0–40°C

Modulation type:
A3J, AFSK: Balanced Modulator
A3: Low Level Modulation
F3: Variable Reactance

Maximum FM deviation:
±5 kHz

AFSK shift frequencies:
170, 425, 850 Hz

Output impedance:
50 ohms(nominal), unbalanced

Microphone impedance:
Low (500 to 600 ohms)

RECEIVER

Frequency range:
150 kHz to 29.9999 MHz (continuous)

Circuit type:
Triple conversion superheterodyne

Clarifier range:
±10 kHz

Sensitivity:
(CW, SSB, and AM figures measured for 10 dB S+N/N)
* 2 to 30 MHz ** 150 kHz to 2 MHz
SSB/FSK/CW(W; w/out options)
* better than 0.25 μV, ** better than 4.0 μV
CW(N)
(with optional XF-455.8MCN 300 Hz filter installed)
* better than 0.1 μV, ** better than 1.6 μV
CW(W)
(with optional XF-8.9HC filter installed)
* better than 0.16 μV, ** better than 2.6 μV
AM(W)
* better than 1.4 μV, ** better than 22 μV
AM(W)
(with optional XF-8.9GA filter installed)
* better than 1.25 μV, ** better than 20 μV
AM(N)
* better than 1.0 μV, ** better than 16 μV
FM
better than 0.6 μV for 12 dB SINAD

Intermediate frequencies:

1st IF:	47.055 MHz
2nd IF:	8.9875 MHz
3rd IF:	455 kHz
FM IF:	455 kHz

for free by
RadioAmateur.eu

Downloaded from www.Manualslib.com manuals search engine

Image rejection:
better than 70 dB

IF rejection:
better than 70 dB for all frequencies

Selectivity (adjusted for maximum IF width):

	–6 dB	–60 dB
SSB, CW (W/N), FSK	2.5 kHz	4.2 kHz
CW(N)*	300 Hz	600 Hz
CW(W)*	600 Hz	1.2 kHz
AM(W)	6 kHz	17 kHz
AM(W)*	5 kHz	12 kHz
AM(N)	3 kHz	9 kHz
FM*	12 kHz	24 kHz

* with optional filter installed

NOTE: These figures apply as maximum bandwidths with Width control set to maximum.

Dynamic range: (at maximum sensitivity)
better than 95 dB with optional 300 Hz CW(N) filter

Audio peak filter range:
350–1400 Hz

IF notch filter range (demodulated):
500–2700 Hz

Audio output power:
3-watts minimum (into 4 ohms, with less than 10% THD)

Audio output impedance:
4 to 16 ohms

POWER REQUIREMENTS

Voltage:
AC: 100 to 120 V, or 200 to 234 V;
50 to 60 Hz

Power consumption:	AC
Receiver	72 VA
Transmit (100 W output)	530 VA

Dimensions (WHD):
approximately 370 mm x 157 mm x 350 mm; 380 mm x 165 mm x 465 mm with all feet, knobs and heatsink

Weight:
approximately 17 kg.

All measurements for specifications as per Japan Amateur Ind. Assoc. Standards.
Specifications subject to change without notice or obligation.

for free by
RadioAmateur.eu

Downloaded from www.Manualslib.com manuals search engine

SEMICONDUCTORS

ICs:

AN6551	4
AN6552	1
HD10551P	4
MB8718	2
MC1496P	1
MC14001B	1
MC14011B	2
MC14012B	1
MC14013B	1
MC14016B	2
MC14027B	2
MC14028B	2
MC14066B	1
MC14081B	2
MC14093B	2
MC14504B	2
MC14514B	1
MC14518B	1
MC14572UB	1
MC14584B	1
MSL912RS	3
MSM80C85ARS	1
ND487C2-3R (Ring Module)	1
ND487R1-3R (Ring Module)	1
NJM78L05A	1
NJM78L08	1
NJM78L09A	3
SN7475N	1
SN74LS00N	2
SN74LS02N	4
SN74LS04N	1
SN74LS05N	1
SN74LS09N	1
SN74LS14N	1
SN74LS42N	1
SN74LS74N	2
SN74LS75N	2
SN74LS90N	4
SN74LS123N	1
SN74LS145N	3
SN74LS190N	1
SN74LS365N	2
SN74LS373N	4
SN76514N	7
TA7302P	1
TBP18SA030N	1
TC5067BP	1
TC5081P	2
TC9122P	3
μPA2004C	4
μPC78L05	4
μPC78L08	1*
μPC78L12	1*
μPC577H	1
μPC1458C	4
μPC2002V	1
μPC7805H	2**,1*
μPC7808H	2
μPD445LC-1	2
μPD2364C-0402	1
μPD8255AC-5	2
μPD8279C-5	1

FETs:

2SK19TM-BL	10
2SK19TM-GR	6**,5*
2SK107-3	6
2SK125	9
2SK147BL	1**
3SK73GR	11

Transistors:

2SA496Y	2
2SA564AR	1
2SA733AP	27
2SA733AQ	5
2SA950Y	7**,5*
2SA1012Y	3**,2*
2SA1015GR	1**
2SB529D	1*
2SB774	2
2SB856B	1
2SC380TM-Y	11
2SC509Y	1
2SC535A	14
2SC535C	1
2SC732GR	1
2SC945AP	14
2SC945AQ	3
2SC1583G	2
2SC1589	1**
2SC1815BL	1
2SC1815GR	28
2SC1815Y	31
2SC1923R	3
2SC1959Y	2
2SC2002L	2
2SC2166	1*
2SC2395	2**
2SC2509	2*
2SD288K	1**
2SD592Q	1
2SD717Y	1
2SD745S	1*
2SD880O	1
2SD882Q	1*
2N4427	2
2N5685	1**
MPS-A13	3
MRF422	2**

Diodes:

1N60 (Ge)	17
1N270 (")	15
1S188FM (")	3
1S1555 (Si)	69
1S1588 (")	1
1SS16 (Schottky Barrier)	1
1SS53 (Si)	195
1SS97	41
1SS106 (Schottky Barrier)	4
1SV50 (Varactor)	1
1SV55 (")	13
10D1 (Si)	5**,3*
10D10 (")	4**
FC53M-5 (Varactor)	1
FC63 (Varactor)	1
HZ3C1 (Zener)	1
HZ3C3 (")	1
HZ5C1 (")	2
HZ5C2 (")	2
HZ6C1 (")	2**
HZ7A2 (")	2
HZ9C1 (")	2
HZ11C1 (")	1
MV11 (Varistor)	1*
MV103 (")	2**,3*
RD7.5EB1 (Zener)	1
S5VB10 (Si)	1
S25VB10 (")	1**
TLY205 (LED)	12
WZ033 (Zener)	1
WZ034 (")	1
WZ051 (")	1
WZ070 (")	1
WZ100 (")	1
YZ033 (")	2

FCDs:

FIP9E8A	1
FIP9P5	1

Photo interrupter:

EE-SH3-X-1	2

* : 10W MODEL
** : 100W MODEL

for free by
RadioAmateur.eu

Downloaded from www.Manualslib.com manuals search engine

FRONT PANEL CONTROLS AND SWITCHES

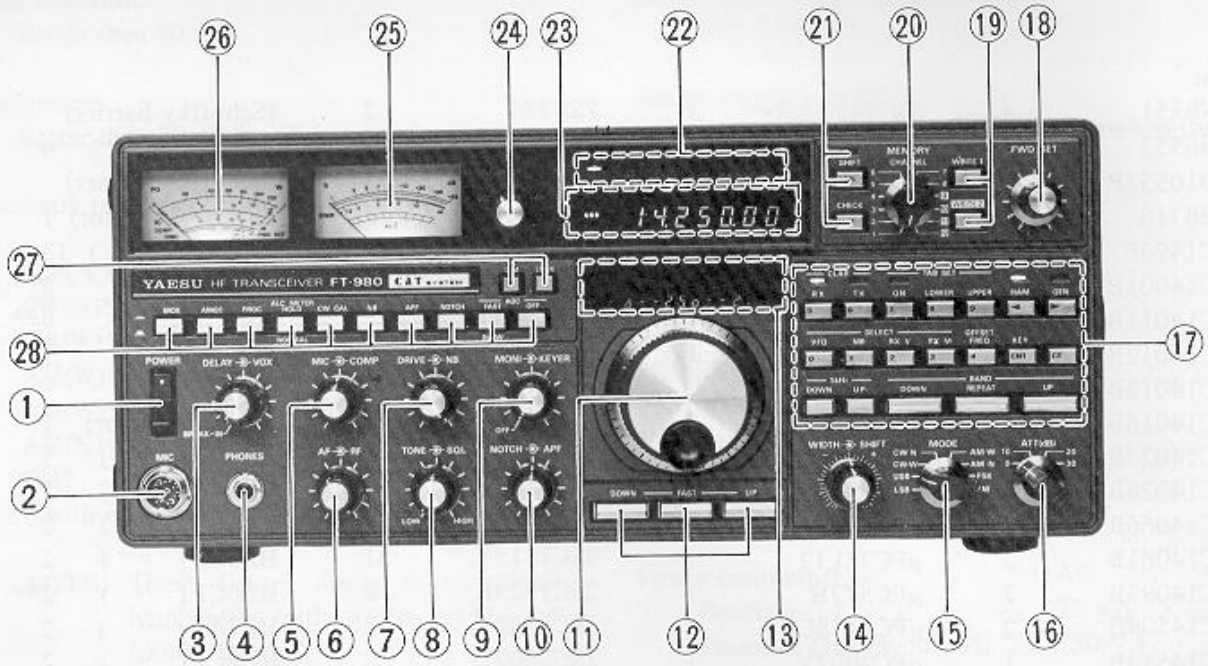

Please refer to the Installation Section on page 16 before connecting the FT-980 to AC Power.

① POWER

This is the main ON/OFF switch for the transceiver. To retain VFO and memory frequencies when this switch is off, install the backup batteries as described on page 17.

② MICrophone

This 8-pin connector accepts the microphone plug. Pin connection details are provided on page 18. Microphone impedance should be 500–600 ohms.

③ DELAY–VOX

The inner DELAY control adjusts the delay time of the automatic transmit-to-receive switching circuit, for use in any mode when the PTT switch is not used for this purpose. Clockwise rotation increases the delay time, and full counterclockwise rotation (into the click-stop) provides almost instant T-R switching (full break-in) for QSK CW operation.

The outer VOX control adjusts the sensitivity of the voice-actuated transmit circuit for SSB and AM operation. Clockwise rotation increases the sensitivity of this circuit to the microphone input.

④ PHONES

Standard monaural or stereo headphones with 4–16 ohms impedance may be connected to this jack. Stereo headphones with a 3-conductor plug will reproduce the audio in both ears, as with monaural headphones and a 2-conductor plug. Inserting the plug into this jack disables the internal speaker, or external speaker, if connected.

⑤ MIC–COMP

The inner MICrophone gain control sets the gain of the microphone audio amplifier in the transmitter during AM operation, and SSB operation when the RF speech processor is off. Clockwise rotation increases gain.

The outer COMPression control is activated during SSB transmission when the RF speech processor is switched on, to adjust the level of amplitude compression in the processor.

⑥ AF–RF

The inner AF control adjusts the level of the audio gain of the receiver. Rotate this control clockwise to increase the volume.

The outer RF gain control knob adjusts the gain of the RF and IF amplifiers via the AGC lines during reception. This control is normally set to the fully clockwise position for maximum receiver sensitivity and optimum amplifier linearity.

for free by
RadioAmateur.eu

Downloaded from www.Manualslib.com manuals search engine

When the RF gain control is rotated counterclockwise from its maximum position the S-meter minimum deflection point will move up the scale. The peak deflection for a given signal will remain the same as long as it is greater than the point of minimum deflection set by this control, but the receiver will not respond to weaker signals.

⑦ DRIVE–NB

The inner DRIVE control adjusts the level of the carrier during CW, AM, FM and FSK transmission. During SSB transmission with the RF speech processor activated, this control adjusts the drive level to the processor.

The outer NB control adjusts the time constant of the noise blanker AGC, which determines the width of the blanking pulse when the noise blanker is activated, during reception of SSB, CW, FSK (and AM when the amplitude of the noise exceeds that of the received carrier).

⑧ TONE–SQL

The inner TONE control adjust the audio frequency response of the receiver AF amplifier.

The outer SQL (squelch) control adjusts the relative incoming signal level at which the receiver audio is disabled during FM reception.

⑨ MONI–KEYER

The inner MONItor control adjusts the audio volume of the IF transmitter monitor during transmission. Full counterclockwise rotation of this control into the click-stop turns the monitor circuit OFF.

The outer KEYER control adjusts the speed of the optional internal electronic CW keyer, when installed.

⑩ NOTCH–APF

The inner NOTCH control tunes the frequency of the IF notch when activated during reception of SSB, CW, FSK and AM. Tuning range corresponds with approximately 500–2700 Hz audio, after demodulation.

The outer APF control tunes the center frequency of the audio peak filter, when activated during reception; most useful during CW reception when added selectivity is required.

⑪ Tuning Knob

The shaft of this control is connected to the photo-interrupter encoder to produce the pulses used to change the frequency of either of the VFOs or memories in 10 Hz steps, when so directed by the microprocessor. The small divisions on the outer ring of this knob each represent 200 Hz of frequency change, and the large divisions represent 1 kHz. One rotation of the knob produces 10 kHz of frequency change.

⑫ DOWN–FAST–UP

These three large buttons control the 10 Hz/step frequency scanner. Pressing either the DOWN or UP button alone will cause scanning at approximately 300 Hz/sec, while pressing either of these along with the FAST button will cause scanning at approximately 30 kHz/sec. The functions of these buttons are duplicated by buttons of the same names on the optional Yaesu scanning microphones (page 18).

⑬ Sub Display

This synthesized analog display provides a relative frequency indication which scrolls when the frequency of the selected VFO is changed. Digital display of the kilohertz portion of the VFO frequency to the nearest 50 kHz is provided (000–950), with plus/minus 50 kHz on either side of the actual VFO frequency always represented.

Digit locations are numbered from 1 to 9 on the display window, and each represents 10 kHz with reference to digit motion. A scrolling cursor is also provided beneath the digits, which steps from one digit location to the next for each 1 kHz of VFO frequency change. When the cursor is not present the 1 kHz digit of the VFO frequency is zero. Otherwise, the value of the 1 kHz digit can be read directly from the number printed on the display window which corresponds to the cursor location.

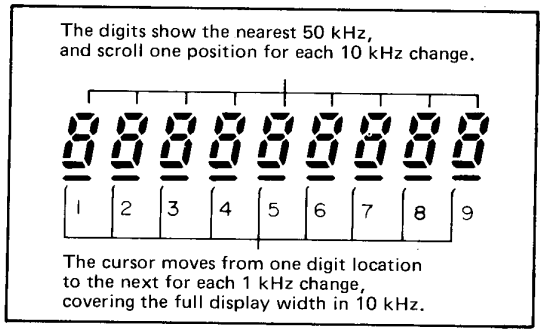

for free by
RadioAmateur.eu

Downloaded from www.Manualslib.com manuals search engine

⑭ WIDTH –◉– SHIFT

The inner WIDTH control adjusts the IF bandwidth of the receiver during SSB, CW, FSK and AM reception. Maximum bandwidth is provided when this control is set in the center detent, and is equal to the combined selectivity of the standard and/or optional IF filters in use for the mode selected. Clockwise rotation moves the upper skirt of the IF passband lower in frequency, and counterclockwise rotation moves the lower skirt upwards.

The outer SHIFT control tunes the relative position of the receiver IF passband with respect to the frequency to which the receiver is tuned during SSB, CW, FSK and AM reception. The control is detented for every 100 Hz of shift, and turning the control clockwise raises the center frequency of the passband, while turning it counterclockwise lowers the center frequency. When set to the 12 o'clock position the passband center frequency is aligned for the frequency shown on the display.

⑮ MODE

This selector determines the operating mode of both VFOs (Ham and General Coverage). It does not effect the mode of stored memories. Optional filters are available for CW-N (narrow) and AM, without which CW-N will perform the same as CW-W, and AM will not allow IF width control. See page 22 for more information on the optional filter choices.

⑯ ATT (dB)

This selector provides a choice of three levels of receiver attenuation. Usually this selector is set to the 0 position for maximum receiver sensitivity in all modes. However, when a high ambient noise level is present, or when excessively strong stations cause intermodulation distortion to interfere with reception, this selector can be used to improve readability and comfort. The ATT LED above the main digital display will be illuminated while the attenuator is activated.

⑰ Keypad Buttons

Notice that the upper two rows of buttons have numbers or symbols engraved in the button themselves. These labels are used for keypad frequency entry, and the buttons are activated for this purpose by pressing the button with ENT engraved on it (second row, second from right). This will cause the leftmost digit of the main display to blink, and will disable all other frequency control knobs and buttons.

The flashing digit of the display may now be altered by pressing the button with the desired number on it. Then the next digit to the right will begin flashing, and it may be changed in the same manner. The [CE] button can be used to clear an error, and the [◄] and [►] buttons can be used to relocate the flashing pointer. Once the new frequency is displayed, press the ENT button again to ENTer the new frequency (into the previously selected VFO or memory channel), and return all frequency control systems to normal operation.

–CLAR– [RX] [TX]

These two buttons, labelled RX and TX with their respective LEDs, activate the CLARifier function for the receiver or transmitter, respectively. This function is described in detail in the Operation Section of this manual.

–TAB SET– [ON] [LOWER] [UPPER]

These three buttons are used to program user-defined frequency limits for the tuning range of the VFOs. To set the lower frequency limit, the selected VFO (Ham or General Coverage) is tuned to the desired frequency and the LOWER button is then pressed. Then the upper frequency is tuned and the UPPER button pressed. Now to activate the limits, the ON button is pressed (its LED will be illuminated). To deactivate the limits, just press the ON button again.

If the VFO is tuned outside of the TAB range and the TAB is then switched ON, the VFO frequency will be automatically shifted to the nearest TAB limit, and the old VFO frequency will be lost. Each VFO can be programmed for its own, independent TAB limits, which will be stored as long as the power is on or memory backup is supplied.

HAM GEN

The HAM and GENeral coverage buttons and their associated LEDs select the operating VFO. The HAM VFO is automatically limited to the 500 kHz segments that include the HF amateur bands, and this VFO can be used for either transmit or receive. When the receiver is operating on the GEN VFO, press the HAM button to change to the HAM VFO, and the associated LED will light.

for free by
RadioAmateur.eu

Downloaded from www.Manualslib.com manuals search engine

The GENeral coverage VFO tunes continuously from zero to 29.99999 MHz, and can be used for receive only (even when tuned to the amateur frequencies). The portion of the VFO coverage from zero to about 150 kHz is not useful for reception, as same internal receiver signals are present in this range; and the front-end components will not respond to incoming signals in this range. **The GEN VFO must not be used for receiving during full break-in (QSK) operation**, but it may be used during semi break-in or PTT controlled split frequency operation.

–SELECT– [VFO] [MR] [RX V] [RX M]

These four buttons select the source of the controlling frequency for the receiver, transmitter and main display.

Press the VFO button to select control by either the HAM VFO (for transceive) or GEN VFO (receive only), as determined by the HAM or GEN button. The operating frequency of the selected VFO will appear on both the main and sub displays.

Press the MR (Memory Recall) button to select control by the memory channel, as determined by the setting of the MEMORY CHANNEL selector. The Operating Section provides more details of memory operation.

Press the RX V button or the RX M button for split frequency transceive operation. The RX V button selects receiving on the predetermined VFO and transmitting on the predetermined memory channel, while the RX M button selects the reverse. The SPLIT LED indicator above the main display will be lit whenever split operation has been initiated by the RX V or RX M button.

OFFSET FREQ [OFFSET FREQ]

Press this button to display the frequency difference between the predetermined VFO and memory channel when split (RX V or RX M) operation is selected. The frequency difference will appear on the main display, and will change as the VFO or unlocked memory is tuned. If the transmit frequency is higher than the receive frequency, the displayed frequency will be preceded by a minus sign. If the two frequencies are more than 10 MHz apart, the OFFSET function will cause the display to read 10.00000 MHz. Press this button again to return to normal frequency display.

KEY [KEY ENT]

Press this button to call up the alternate keypad frequency programming mode, as described under "Keypad buttons", above.

–5 kHz– [5kHz UP] [5kHz DOWN]

These two buttons cause the displayed frequency to be shifted UP or DOWN 5 kHz, unless a locked memory frequency is being displayed. This function may also be used to scan in 5 kHz steps, as described in the next paragraph.

–BAND– [DOWN] [REPEAT] [UP]

The UP and DOWN buttons cause the displayed frequency to be shifted up or down 500 kHz during GENeral coverage operation, unless a locked memory frequency is being displayed. Pressing the REPEAT button (and holding it in) while pressing either the BAND UP or DOWN, or 5 kHz UP or DOWN buttons momentarily, causes the stepping action to repeat approximately six times per second. Release the REPEAT button to stop. During HAM operation the BAND buttons step from one amateur band to the next (instead of 500 kHz steps), except on the 10 meter band.

⑱ FWD SET

When the METER selector is set to the SWR position, this control is used to align the meter needle with the FWD SET marker on the Meter 1 scale during transmission.

⑲ WRITE 1 WRITE 2

These buttons write the displayed frequency, mode and HAM or GEN information into the selected memory channel. Pressing WRITE 1 will store information in channels 1 through 8 (erasing previous memory contents). Both WRITE 1 and WRITE 2 must be pressed simultaneously to store information in channels 9 through 12.

⑳ MEMORY CHANNEL

This selector addresses the memory channel to be called for all memory operations.

㉑ SHIFT (LDB) and CHECK (V/U) [SHIFT LDB] [CHECK V/U]

The SHIFT (LDB) button, in its normal SHIFT state, unlocks the selected memory channel frequency, so that it can be tuned with the Tuning Knob, steppers or scanner while the SHIFT LED is lit. The shifted frequency will be shown on the

for free by
RadioAmateur.eu

Downloaded from www.Manualslib.com manuals search engine

main display, but not on the sub display, which will continue to show the predetermined VFO frequency. The original channel frequency will not be erased, and when the SHIFT button is pressed again the channel will return to the original frequency, unless the appropriate WRITE buttons are pressed, in which case the new (shifted) frequency will be stored. The SHIFT function does not permit the mode or HAM/GEN information stored in the memory channel to be changed.

The LDB function is activated only when the KEY (ENT) key is pressed (causing a digit on the main display to blink, and activating the Keypad state). The LDB key will then cause the Last Digit to Blank, removing the 10 Hz digit for all future operation until the LDB key is pressed again in the Keypad state.

The CHECK button in its normal state causes the main display to indicate the frequency and mode stored in the selected memory channel, regardless of transceiver operating conditions. The actual operating frequency and mode of the transceiver will remain unaffected, and some or all of the memory channels may be scanned for frequency and mode content by rotating the selector. The M CHECK LED above the main display will be lit while the display is engaged in the CHECK function.

The V/U function is activated only when the KEY (ENT) key is pressed (activating the Keypad state). This allows the hundreds of MHz digit to be displayed when an appropriate transverter is connected to the FT-980.

㉒ LED Indicators

The VFO and MR LEDs indicate the source of the operating frequency, and one or the other will always be lit, according to which SELECT button was last pressed.

The SPLIT LED indicates separate transmit and receive frequency operation has been called by the RX V or RX M SELECT buttons.

The EXT LED indicates external computer control is being exercised over the digital functions of the FT-980.

The M CHECK LED indicates that the frequency and mode displayed on the main display is that of the selected memory channel, and thus not necessarily the operating frequency or mode of the transceiver.

The ATT LED indicates that the ATTenuator is activated, and thus the receiver is not set for maximum sensitivity.

㉓ Main Display

This display indicates frequency to the nearest 10 Hz (or 100 Hz if the LDB function is activated), as well as mode. Unless the M CHECK function is activated, the displayed frequency and mode are the actual operating frequency and mode; and unless operating from a memory channel or EXTernal control is being exercised by a computer, the mode displayed will correspond to the setting of the MODE selector.

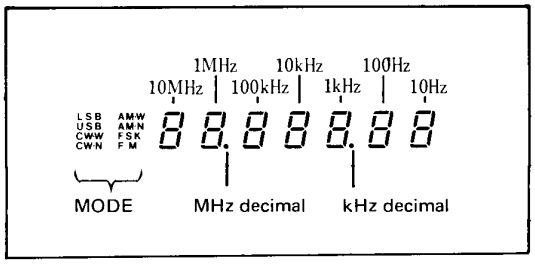

㉔ METER Selector

This selector determines the functions of the meters during transmission: VCC indicates voltage at the final transistors (Meter I), IC indicates current to the final transistors (Meter I), COMP indicates the level of compression of the RF Speech processor (during SSB transmission only, Meter I), PO indicates RF output power (Meter I), and SWR causes relative forward power output to be displayed on Meter I, and reflected power as SWR ratio on Meter II.

During reception of FM, the last four positions of of this selector allow Meter I to function as a DISCriminator (center tuning) meter. During transmission, the first four positions of this selector will cause Meter II to indicate ALC.

for free by
RadioAmateur.eu

Downloaded from www.Manualslib.com manuals search engine

ANT (RCA Jack)
This jack is for connection of a separate antenna for the receiver in the FT-980. When so connected, and when the SEP NOR slide switch is set to the SEP position, the FT-980 will receive on the antenna connected here, and transmit on the antenna connected to the coaxial ANT jack. Proper impedance for this ANT jack is also 50 ohms, unbalanced.

SEP/NOR Switch
The diagram below illustrates the relationships between this switch and the related jacks and relays. When the FT-980 is to receive on a separate antenna (from that used for transmitting), this switch must be set to the SEP position. Also, when the receiver in the FT-980 is not being used, but an external receiver is connected and intended to use the same antenna used for transmitting, best impedance matching will be obtained when this switch is set to SEP (not necessary in U.S. Model). For normal reception with the FT-980 receiver on the same antenna as that used for transmitting, set this switch to the NOR position.

⑥ RCA Jacks

FSK
This is the keying line for FSK operation. When this jack is shorted, the AFSK generator frequency shifts from the MARK to the SPACE tone. Open circuit voltage is 5V, and closed circuit current is 5 mA.

RF OUT
This jack provides a low-level (−6 dBm, 0.1 V_{rms} @ 50 ohms) RF sample of the transmitter output from the predriver, for a transverter.

PTT
This jack provides access to the PTT line, for external receive-to-transmit control by a footswitch or other device, and for easy servicing.

AF OUT
This jack provides a constant level (200 mV @ 50 kΩ) output from the FT-980 AF amplifier input, which is unaffected by the AF gain and TONE controls; for use in recording or for data decoding purposes where a constant audio level is required.

IF OUT
This jack provides buffered output of the last 455 kHz 3rd IF amplifier, just before the receiver demodulator. This signal can be used for narrow-band monitoring of the receiver passband, or for external demodulation/detection systems.

PATCH IN
This jack accepts alternate audio input to the microphone amplifier, such as from a phone patch or tape recorder (during playback). The MIC gain control will affect the response of the transmitter to signals applied here during SSB and AM operation, except during SSB transmission with the RF speech processor on.

EXT SPKR
This 2-conductor 1/8-inch mini phone jack is connected to the output of the AF amplifier so that when a plug is inserted into this jack, the internal speaker is disabled. Headphones though, if used, will in turn disable an external speaker connected here, as well as the internal speaker.

⑦ ACC-2

This 5-pin DIN jack accepts external ALC voltage and provides T-R relay contact and PTT line connections for interconnecting a linear amplifier. Pinout is shown on page 20.

⑧ ACC-1

This 28-pin jack includes multiplexed outputs (pins 1–6) from, and inputs (pins 7–14) to, the CPU from an external accessory, such as a digitally

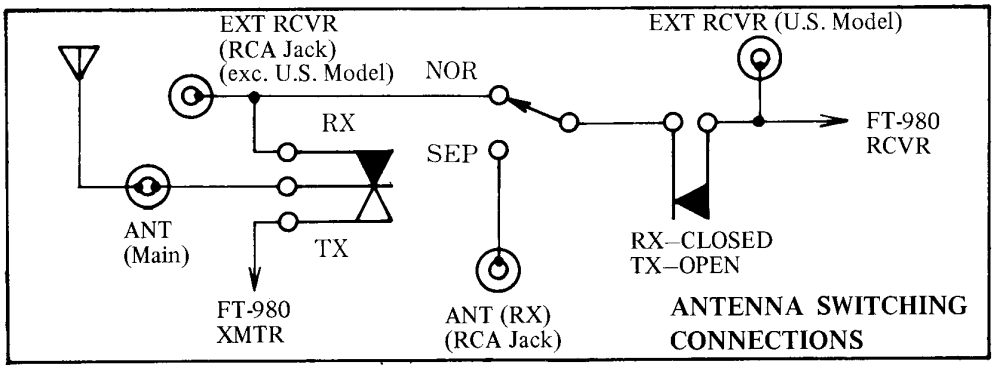

for free by
RadioAmateur.eu

Downloaded from www.Manualslib.com manuals search engine

REAR PANEL CONTROLS AND CONNECTIONS

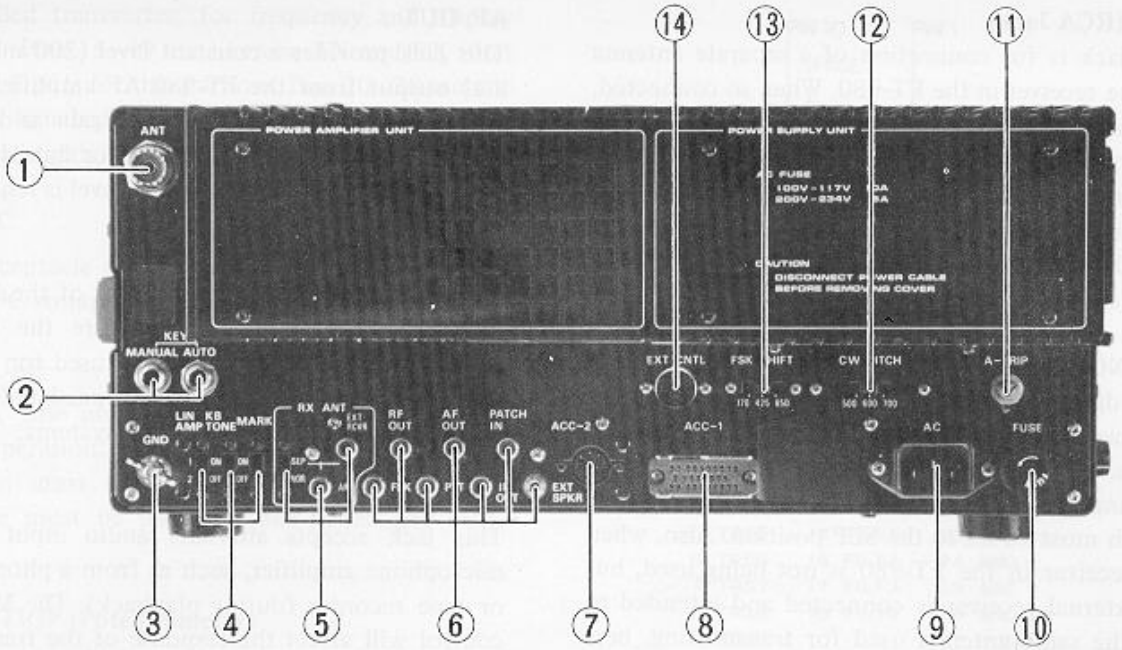

① ANT

This type M jack is for connection of a 50-ohm unbalanced load, such as an antenna, antenna tuner or linear amplifier input.

② KEY (MANUAL and AUTO)

The MANUAL jack is a two-conductor ¼-inch phone jack for a CW straight key. The AUTO jack is a three-conductor ¼-inch phone jack for CW keyer paddles when the optional electronic Keyer Unit is installed in the FT-980. Both jacks are open circuits when no plug is inserted. Open circuit voltage is 5 V, and closed circuit current is 5 mA.

③ GND

For best performance and safety, this terminal should be connected to a good earth ground through the shortest path possible.

④ Slide Switches

LIN AMP

When a linear amplifier designed for full break-in operation (such as the Alpha 78) is connected to the FT-980, this switch can be set to the upper position (1) to disable the exciter until the T-R relay contact closure signal is received from the linear amplifier. Please read the caution notice on page 32.

If the FT-980 is used with a non-QSK amplifier such as the FL-2100Z, or without an amplifier, this switch must be set to the lower position (2) in order to transmit.

KB TONE

In the ON position this switch enables a beeper which will produce a short tone whenever the digital control system accepts a command from the panel frequency control buttons, MODE or MEMORY CHANNEL selectors.

MARK

In the ON position this switch activates the Marker Signal Generator, which injects an unmodulated signal into the receiver front ends every 25 kHz throughout the range of the receiver, for testing and calibration purposes. When not needed, this switch should be set to the OFF (down) position to avoid adverse affects on the receiver.

⑤ RX ANT (Slide Switch and Jacks)

EXT RCVR Jack

This RCA jack is for connection of the antenna line from an external receiver, when the same antenna that is used for the FT-980 transmitter is to be used with the external receiver (automatically switched by the relay in the FT-980). Proper impedance is 50 ohms, unbalanced. In the U.S. Model, this Jack connects directly to the FT-980 receiver input, so an external receiver connected here will always share the receiving antenna with the FT-980 receiver.

for free by
RadioAmateur.eu

Downloaded from www.Manualslib.com manuals search engine

PROC
Depressing this button activates the RF speech processor during SSB transmission.

ALC METER HOLD
When this button is depressed the ALC indication on Meter II during transmission will rise to its peak level and hold that deflection for about one second, unless a higher peak occurs. This function is convenient for adjustment of the transmitter during SSB operation. This function is disabled when the METER Selector is set to the SWR position. The out position provides for normal ALC indication.

CW CAL
Depressing this button during CW reception activates a tone in the receiver whose frequency is exactly equal to the difference between that of the third IF and the demodulating carrier (BFO) signal, so that if the receiver is tuned to zero beat the incoming CW signal with the CW CAL signal (same frequency), the transmitter of the FT-980 will be tuned exactly to the same frequency as that of the other station.

NB
This button activates the noise blanker during reception of SSB, CW, FSK and AM.

APF
This button activates the audio peak filter, for use during CW reception.

NOTCH
This button activates the IF notch filter, for use during reception of SSB, CW, FSK and AM.

AGC (FAST/SLOW and OFF)
The FAST/SLOW button selects fast AGC rise and fall time constants for the receiver when depressed, useful when tuning, or when fast fading affects SSB, CW, FSK and AM reception. Also use for weak signal CW reception. When not depressed, slow AGC is selected; best for general reception of AM, FSK, and strong SSB signals.

The OFF button disables the AGC lines (and the S-meter) when depressed, useful in certain conditions for very weak signals when no QRM is present. Otherwise, overloading of the IF stages may cause distortion when the AGC is off. Normal AGC is present when this button is in the out position.

for free by
RadioAmateur.eu

Downloaded from www.Manualslib.com manuals search engine

㉕ Meter II

During receive operation in all modes this meter indicates relative signal strength in S-units (top scale). During transmission, this meter indicates the ALC level (bottom scale) being applied to the last transmitter IF amplifier, unless the METER Selector is set to the SWR position, in which case this meter indicates reflected power as SWR (middle scale).

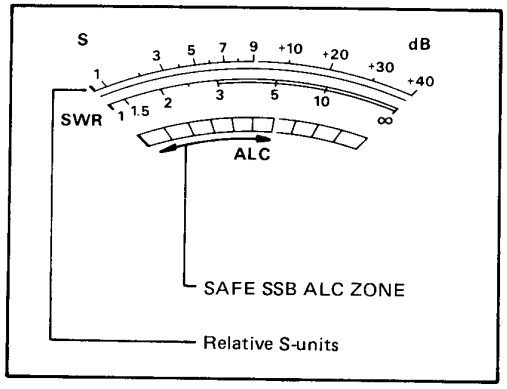

㉖ Meter I

This meter indicates the transmitter parameter selected by the METER Selector, and either VCC (all modes) or DISCriminator tuning (FM only) during receive, if selected. Otherwise, Meter I does not deflect during receive.

VCC and DISC indications can be read on the lowest scale, where the red portion indicates VCC, with the center of this portion calibrated for 24 VDC (13.5 VDC for 10 W models). The FWD SET mark for full scale relative forward power is at the right edge of the lower scale also; for calibration during SWR measurement.

Just above the lowest scale is the COMPression scale, marked from 0 to 27 dB. Use this scale to adjust and monitor the compression level of the RF speech processor during SSB transmission.

The center scale of Meter I is for measurement of IC (final transistor collector current), marked in Amperes from 0 to 15 on the upper edge (and 0 to 4 on the lower edge, for 10 W models).

The topmost scale is for measurement of RF power output (PO), and the upper edge of this scale is calibrated in watts, from 0 to about 130. (The lower edge is marked from 0 to about 12, for 10 W models.)

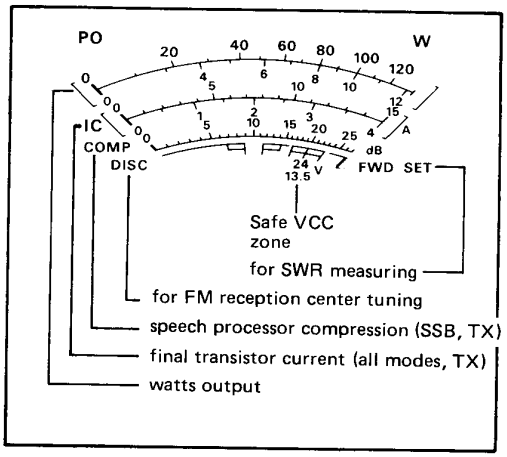

㉗ DIM LOCK

These two-position push buttons are connected so that the IN (depressed) position represents the activated function. The DIM function reduces the brilliance of the displays and meter lamps. The LOCK function disables the tuning knob and 10 Hz scanning buttons (the stepping buttons are not disabled).

㉘ Pushbutton Switches

All of these are two-position push buttons, with the function activated during the depressed condition being labelled above each switch, and the alternate function (OUT position) labelled beneath the switch, unless this is simply "off".

MOX

Depressing this button closes the PTT line, placing the transceiver into the transmit condition.

AMGC

Depressing this button activates the Automatic Mic Gain Control system, which establishes a relative threshold level at the microphone audio input, above which the audio will modulate the transmitter during SSB transmission. Audio signals produced by background noises (machinery, amplifier cooling fans, stray noises, etc.) are thus inhibited from transmission when they are below this threshold. This button must be set to off (out) for AFSK transmission.

for free by
RadioAmateur.eu

Downloaded from www.Manualslib.com manuals search engine

controlled transverter, for frequency and display control. Pins 15–19 are likewise TX and RX filter control inputs for this purpose. Pins 20–28 include various signals for interconnecting accessories, as shown at right.

⑨ AC

This receptacle accepts the AC power cord. Do not apply DC voltage here.

⑩ FUSE

A 10A fuse must be installed here for 100–120 VAC operation. For 200–234 VAC operation, a 5A fuse must be installed. For 10W models, a 2A fuse must be used. Do not install any other type.

⑪ A-TRIP (Potentiometer)

This control adjusts the threshold level of the anti-trip circuit in the VOX system. During voice operation using the VOX, set this control to prevent the receiver audio (from the speaker) from tripping the VOX and activating the transmitter. If set too far clockwise, unstable VOX operation may result.

⑫ CW PITCH (Switch)

This 3-position slide switch allows selection of the most comfortable CW sidetone (and CW CAL tone) according to the operator's preference. Choices are 500, 600 or 700 Hz.

⑬ FSK SHIFT (Switch)

This 3-position slide switch allows selection of the shift frequency (difference between the MARK and SPACE tones). Choices are 170, 425, or 850 Hz. The frequency of the MARK tone will remain at 2295 Hz, while that of the SPACE tone will be shifted.

⑭ EXT CNTL

This 5-pin DIN jack is for connection through an external interface to a microcomputer. Control data is passed in a serial format. Pinout is shown on page 20.

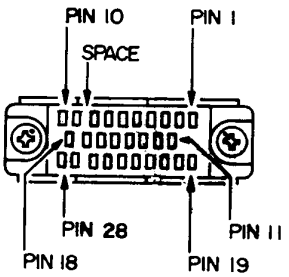

ACC-1 Jack PINOUT

1 TRS1	11 TRS11	19 FILT5
2 TRS2	12 TRS12	20 PTT
3 TRS3	13 TRS13	21 LINEAR SW
4 TRS4	14 TRS14	22 EXT G
5 TRS5	15 FILT1	23 10kHz
6 TRS6	16 FILT2	24 GND
7 TRS7	17 FILT3	25 AGC
8 TRS8	18 FILT4	26 GND
9 TRS9		27 +13.5V
10 TRS10		28 ALC

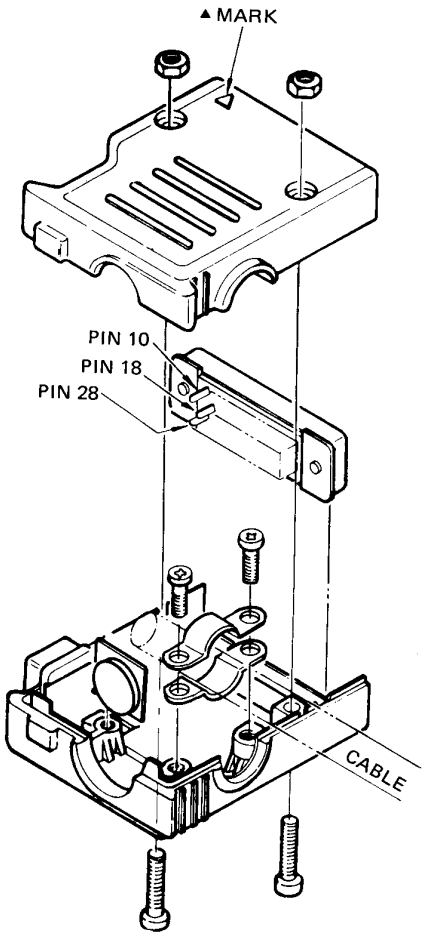

for free by
RadioAmateur.eu
Downloaded from www.Manualslib.com manuals search engine

INSTALLATION

The FT-980 is designed for operation from AC power only. Power supply connections providing for operation from a variety of source voltages are available.

PRELIMINARY INSPECTION

Upon opening the packing carton, immediately give the transceiver a thorough visual inspection. Check to see that all controls and switches are working freely, and inspect the cabinet for any signs of damage. If any damage has been sustained, immediately contact the shipping company, and document the damage completely. Save the packing carton and foam packing material for possible use at a later date.

POWER CONNECTION

The FT-980 is designed for use in many areas of the world, using a variety of different supply voltages. Be absolutely certain that the voltage specification marked on the rear of the transceiver agrees with the local AC supply voltage. THIS INSPECTION MUST BE MADE BEFORE CONNECTING THE AC POWER CORD TO THE REAR APRON OF THE TRANSCEIVER. If the transceiver is wired for another supply voltage, change the connections to the primary of the power transformer as shown below. Also change the label on the rear panel.

CAUTION

PERMANENT DAMAGE WILL RESULT IF IMPROPER AC SUPPLY VOLTAGE IS APPLIED TO THE TRANSCEIVER. OUR WARRANTY DOES NOT COVER DAMAGE CAUSED BY APPLICATION OF IMPROPER SUPPLY VOLTAGE. DO NOT CONNECT THE AC POWER CORD TO A DC POWER SOURCE.

TRANSCEIVER LOCATION AND GROUND

In all station installations, a primary consideration is adequate air circulation around the heat sink and through the case. Do not place books or papers on or around the cabinet, and do not place the FT-980 on top of another heat-generating device, such as a linear amplifier. Avoid heat ducts and window locations that might expose the transceiver to excessive direct sunlight, especially in warm climates.

Ground the transceiver using a heavy braided cable of the shortest length possible. Water pipes are generally not satisfactory as grounding points; it is better to use earth rods with the grounding cable securely connected to each point in the ground system.

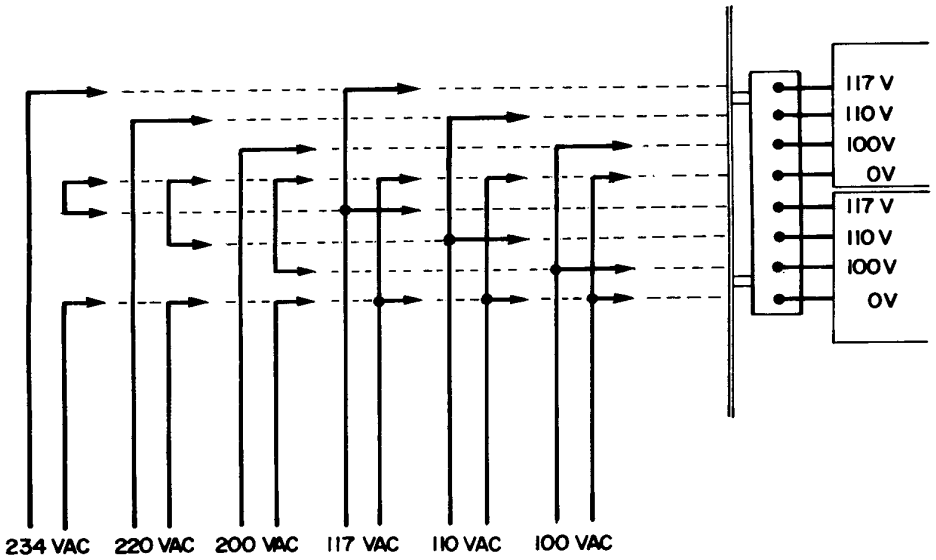

POWER TRANSFORMER PRIMARY CONNECTIONS

for free by
RadioAmateur.eu

Downloaded from www.Manualslib.com manuals search engine

ANTENNA CONSIDERATIONS

The FT-980 is designed for best performance with an antenna system presenting a 50- to 75-ohm resistive load at the operating frequency. While the transmitter output circuitry is designed for uniform response within this impedance range, high SWR will cause reduced output power and degraded receiver performance: At an SWR of 3:1, the transmitter will only provide about 75% of its full output (at 1:1 SWR).

If an open-wire feedline is used, or if the input impedance of the antenna system or linear amplifier input presents a high SWR at the desired operating frequency, an antenna tuner or matching device should be used to provide the proper impedance for the transceiver.

BACKUP BATTERY INSTALLATION

Frequency, mode and band data will be retained in the FT-980 as long as the POWER switch is ON (and AC Power supplied). To retain data in the memory when the power is switched off or disconnected, install two "AA" size batteries inside the access panel on the bottom cover.

To remove the cover, lift the center pin of the plastic latch slightly. Make sure to install the batteries in the proper direction, and remember to replace the batteries every six months.

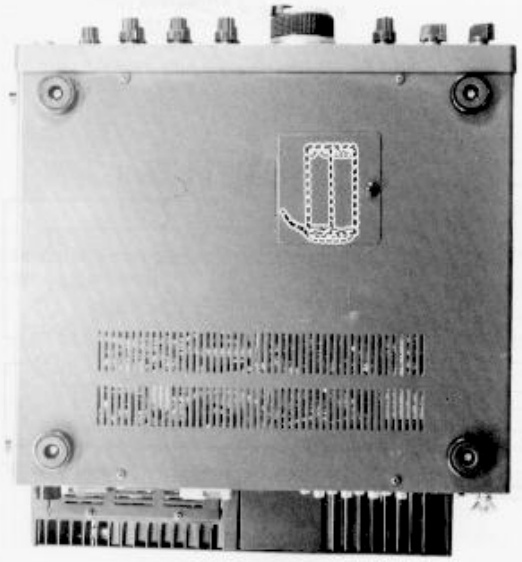

BOTTOM VIEW

for free by
RadioAmateur.eu

Downloaded from www.Manualslib.com manuals search engine

MICROPHONES

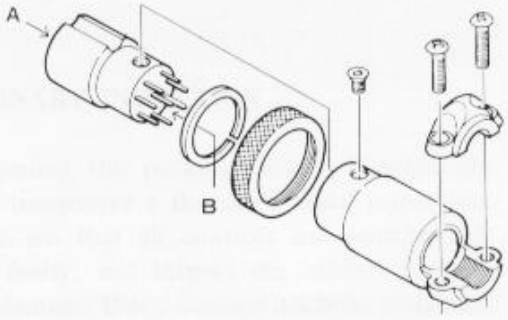

Plug assembly



MD-1B8

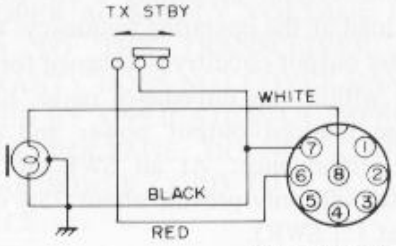

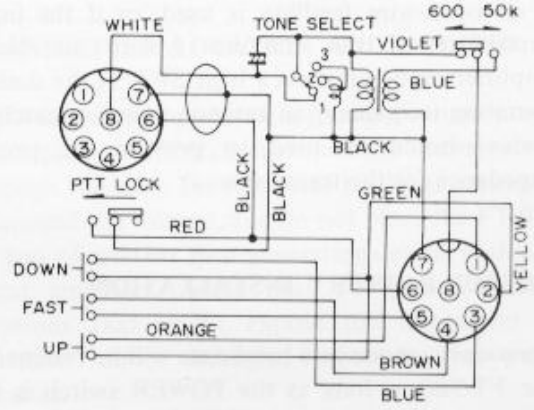

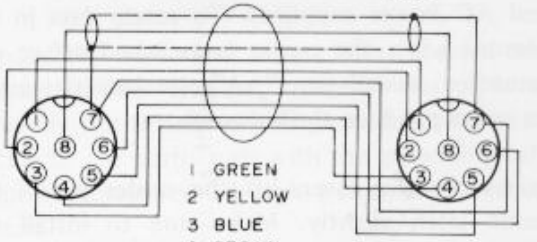

1 GREEN
2 YELLOW
3 BLUE
4 BROWN
5 ORANGE
6 RED
7 BLACK) SHIELDED
8 WHITE)



MH-1B8

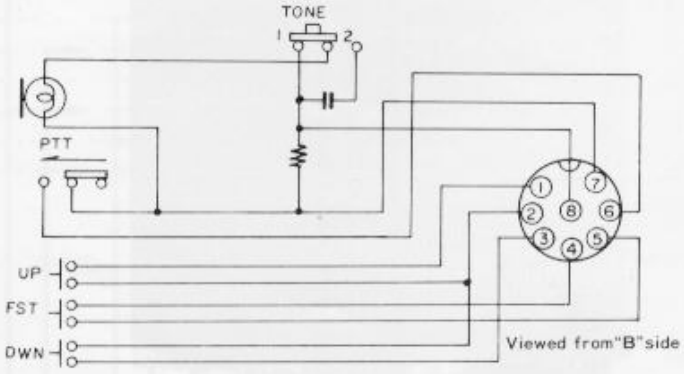

for free by
RadioAmateur.eu

Downloaded from www.Manualslib.com manuals search engine

PLUG CONNECTIONS

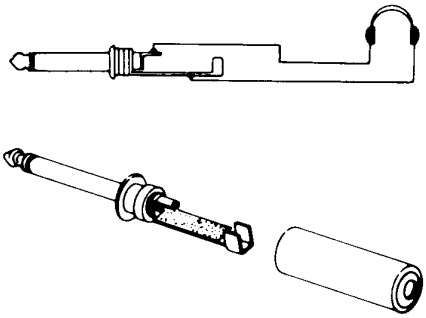

Monaural Headphone Plug

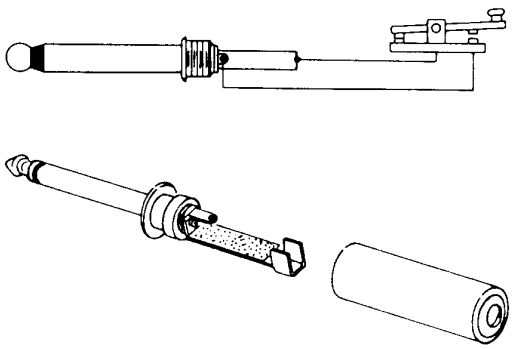

MANUAL KEY Plug

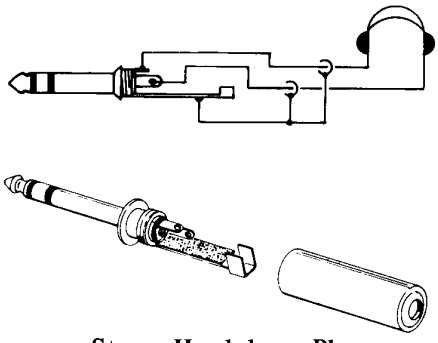

Stereo Headphone Plug

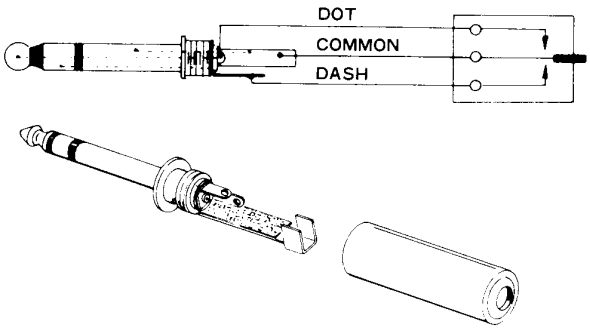

AUTO KEY (Paddle) Plug

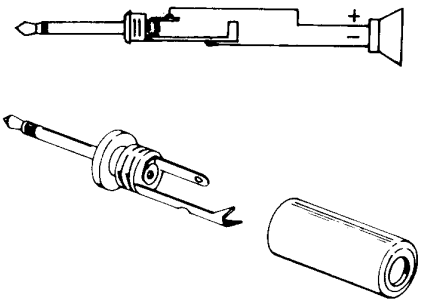

External Speaker Plug

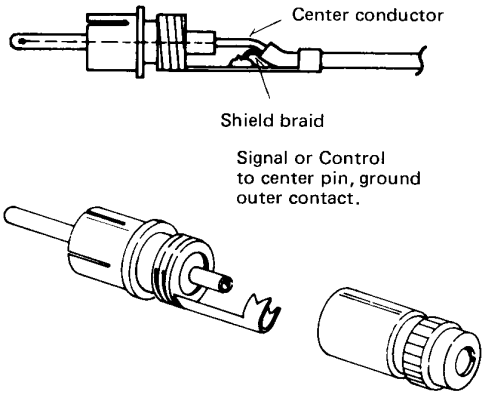

RCA Plug

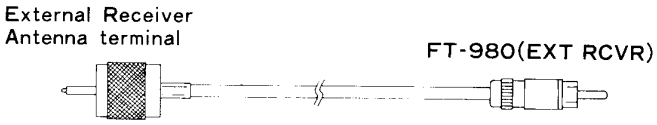

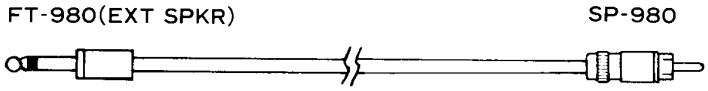

for free by
RadioAmateur.eu

Downloaded from www.Manualslib.com manuals search engine

INTERCONNECTIONS AND DIN PLUG PINOUTS

NON-QSK LINEAR AMPLIFIER INTERCONNECTIONS

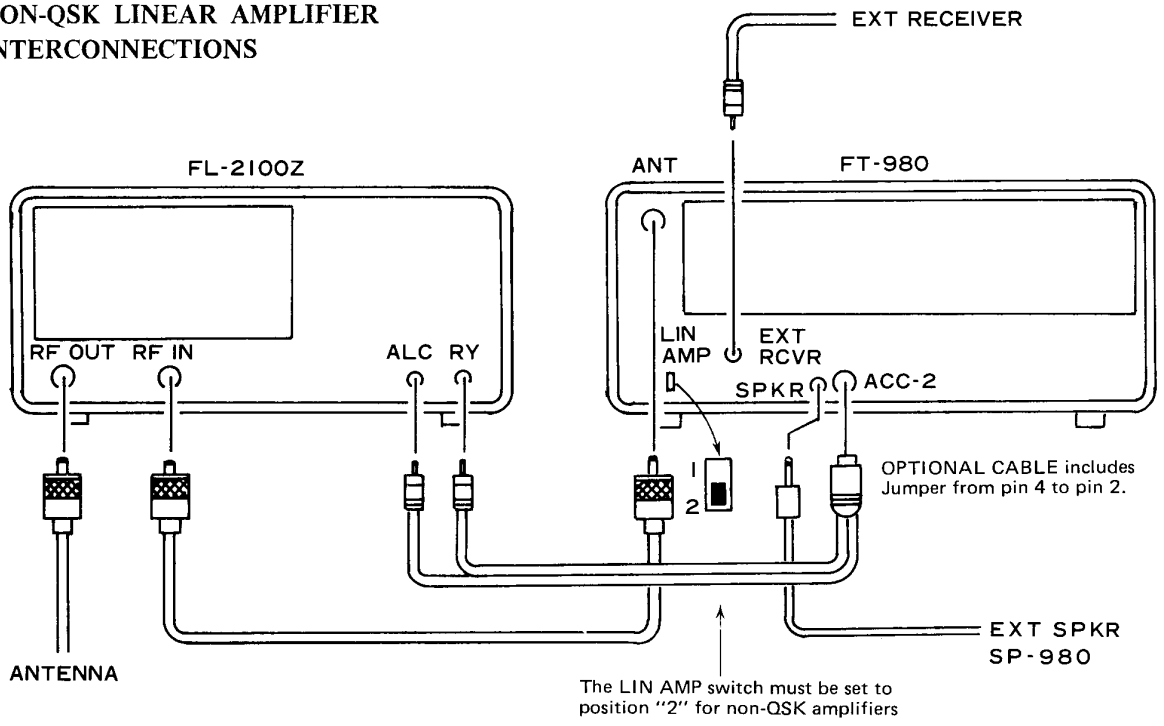

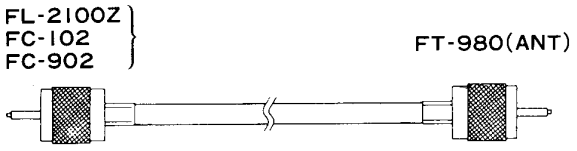

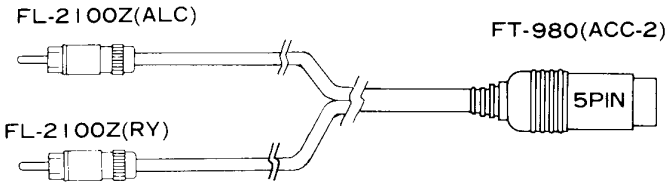

OPTIONAL CABLE

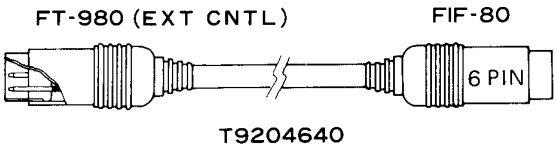

T9204640

Connecting cable for microcomputer interface (FIF-80)

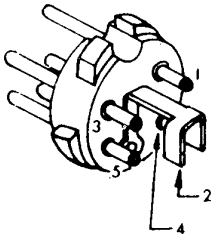

1 EXT ALC
2 GND
3 TX GND
4 DELAY
5 RX GND

Pin 4 must be connected to pin 2 (GND) for non-QSK linear amplifiers.
Please read the caution notice on page 32.

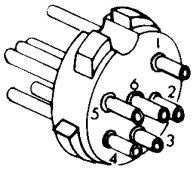

1 GND
2 SO
3 SI
4 PTT
5 AGC
6 NC

EXT CNTL Plug Connections

ACC-2 Plug Connections

Note: The ACC-2 plug supplied with the FT-980 includes the jumper from pin 4 to pin 2.

for free by
RadioAmateur.eu

Downloaded from www.Manualslib.com manuals search engine

QSK LINEAR AMPLIFIER INTERCONNECTIONS

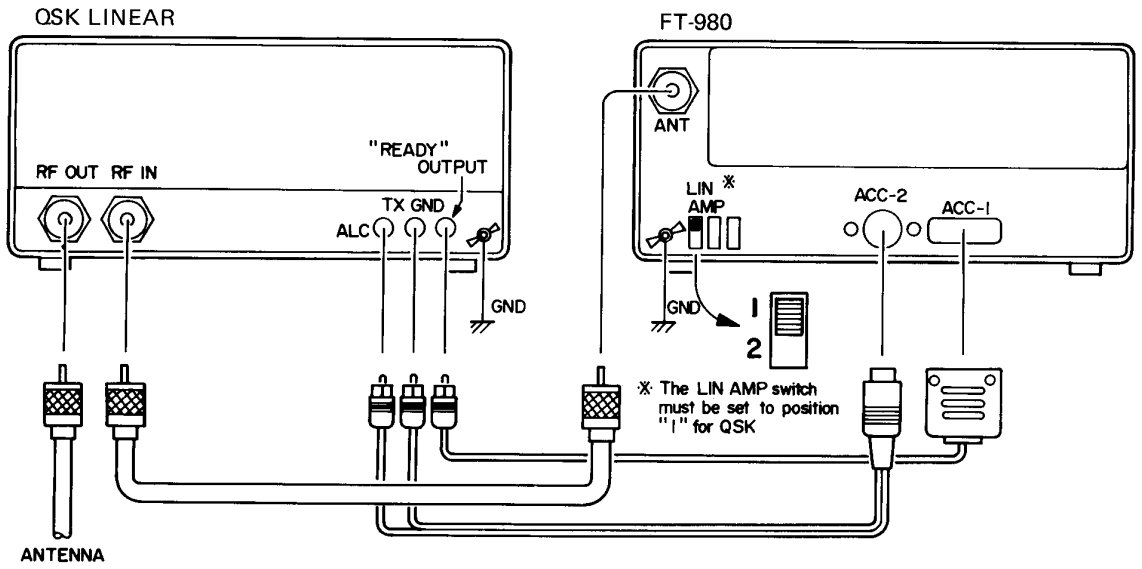

Make certain that the linear amplifier is specifically designed and equipped for full break-in (QSK) operation before interconnecting. If there is any doubt—don't!

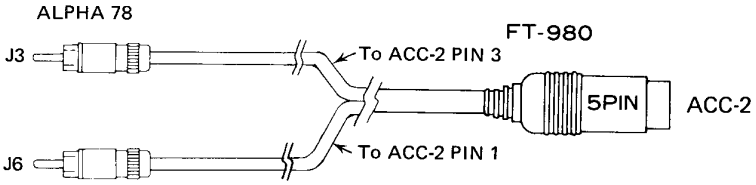

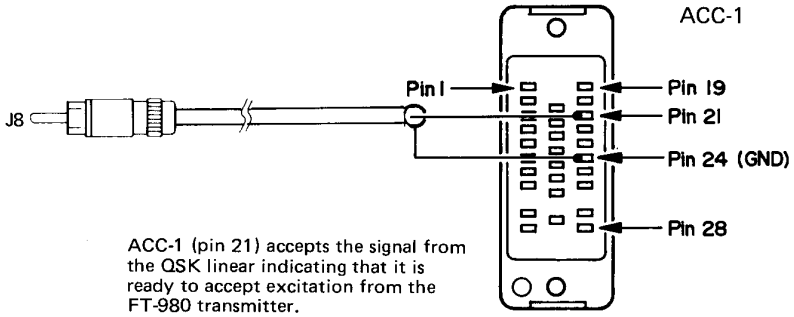

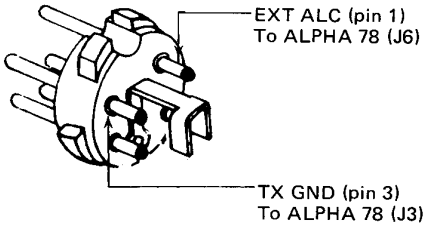

Remote jumper from pin 4 to GND.

ACC-2

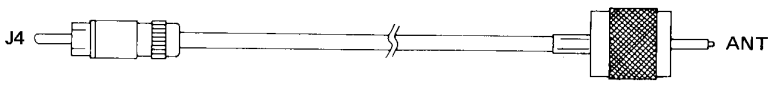

Use shielded cable only, and ground shield at each plug.

for free by
RadioAmateur.eu

Downloaded from www.Manualslib.com manuals search engine

RECEIVER BANDPASS FILTER CONFIGURATIONS

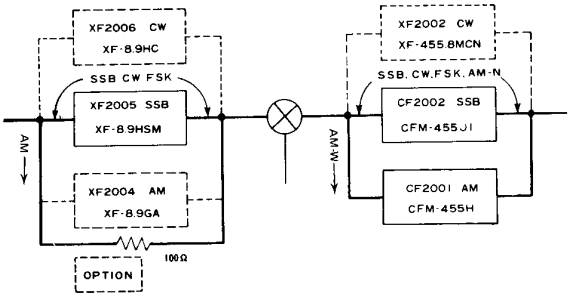

① WITHOUT OPTIONS

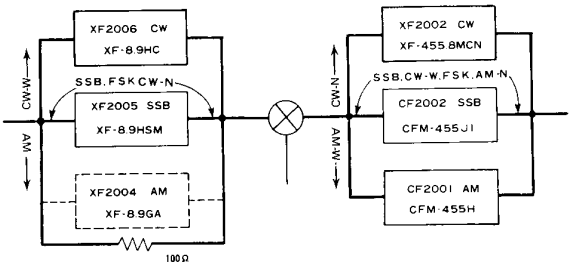

④ WITH OPTIONAL CW-W AND CW-N FILTERS XF-8.9HC AND XF-455.8MCN

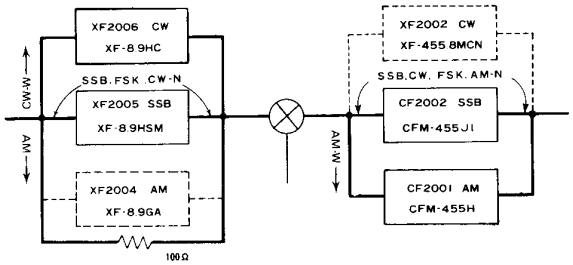

② WITH OPTIONAL CW-W FILTER XF-8.9HC

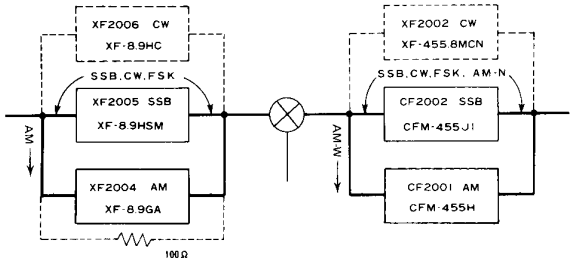

⑤ WITH OPTIONAL AM FILTER XF-8.9GA

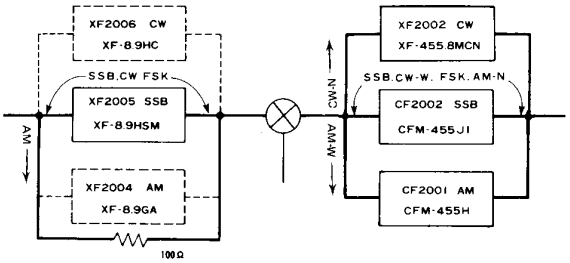

③ WITH OPTIONAL CW-N FILTER XF-455.8MCN

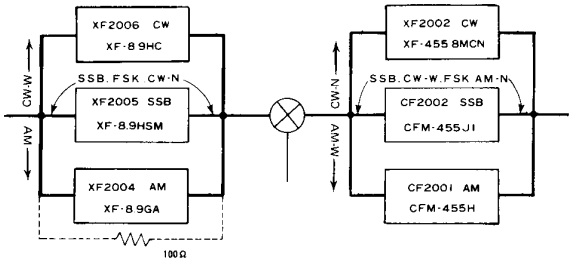

⑥ WITH ALL OPTIONAL FILTERS

OPTIONAL FILTERS

	IDENT NUMBER	YAESU PART NUMBER / KIT NUMBER	CENTER FREQUENCY	BANDWIDTH	INSERT. LOSS	POLES
AM FILTER	XF-8.9GA	H1100870 D2000012	8.9875MHz	6kHz : —6dB 12kHz :—60dB	3dB	6
CW(W) FILTER	XF-8.9HC	H1100880 D2000011	8.9883MHz	600Hz : —6dB 1.6kHz :—60dB	6dB	6
CW(N) FILTER	XF-455.8MCN	H1102065 D2000035	455.8kHz	300Hz :— 6dB 600Hz :—60dB	7dB	8

for free by
RadioAmateur.eu

Downloaded from www.Manualslib.com manuals search engine

OPERATION

The variety of different operating functions in the FT-980 afford substantial flexibility to virtually any amateur radio pursuit on the HF bands. However, the operator must familiarize himself with the interdependent functions of the controls in order to obtain optimum performance for his particular requirements.

The first portion of this section will describe basic operation of the receiver in minute detail, so that, if receiver operation becomes confusing, the operator may return to this section, reset all functions, and begin again. This may have to be repeated several times in order to gain mastery over all of the microprocessor-controlled functions. If the function of one particular control is not clear, kindly refer to the control descriptions in the earlier sections of this manual.

Before connecting the FT-980 to AC power, please read the Installation instructions on pages 16 and 17, if not done already. Connect the microphone to the MIC jack and/or CW key or keyer output line to the MANUAL jack on the rear panel (or keyer paddle to the AUTO jack if the keyer option is installed in the FT-980).

When using a single antenna for transceiving on the FT-980, make sure that the SEP/NOR switch on the rear panel is in the NOR position. Also on the rear panel, set the KB TONE switch ON and the MARK switch OFF.

When certain AC supply voltages are used, and when ambient room temperature is high or heatsink ventilation insufficient, the cooling fan within the heatsink will come on during reception. This is not necessarily harmful, but ventilation around the heatsink and cabinet should be checked.

Basic Receiver Operation

Set the front panel controls as follows:

POWER	OFF
Push Button Switches	all OFF (out)
AF	counterclockwise
RF	fully clockwise
MODE	as desired
ATT (dB)	0
MEMORY CHANNEL	1
ALL OTHER CONTROLS	12 o'clock (midrange)

Press the POWER switch ON. Observe the LED indicators at the right side of the front panel, and above the main display. If no previous data is being retained in the memories, only the GEN LED at the right side and the VFO LED above the display should be lit (default condition). The main display should read 7.000.00, with the selected mode also indicated. The sub-display should have 000 centered in the window.

If backup batteries have been installed and the transceiver operated while the memory was backed up, the default conditions above may not be met. To return to these conditions switch the power off and remove a backup battery cell for one minute to clear all memory data.

Rotate the AF control clockwise for comfortable volume (if set for the FM mode, the SQL control must first be set fully counterclockwise). Also set the TONE control for the desired audio frequency response.

To change frequency, five methods are available; the tuning knob, the scanning buttons beneath the tuning knob, the three BAND buttons at the lower right (DOWN, REPEAT, UP), the 5 kHz stepping buttons (next to the BAND buttons), and the keypad system. Please review the sections on each in the Front Panel Controls section of this manual, trying each on the transceiver while observing both digital displays. Repeat each method several times, if necessary, to become familiar with each. See the note on page 24 if difficulties arise.

Now press the HAM button next to the GEN button. Again try the various tuning methods. Notice that it is now not possible to tune outside of the 500 kHz segments which contain the HF amateur bands.

Press the GEN button to return to the general coverage VFO. Notice that the frequency to which the receiver was tuned when last on the GEN VFO is still retained on this VFO, in spite of any tuning done in the meantime on the HAM VFO. Press the HAM button again to verify that the converse is also true; tuning the GEN VFO will not affect the HAM VFO.

If the 10 Hz digit on the display is not needed, it can be blanked by pressing the KEY/ENT button

for free by
RadioAmateur.eu

Downloaded from www.Manualslib.com manuals search engine

and then the SHIFT/LDB button (near the CHANNEL Selector). Repeat this process to recall the 10 Hz digit to the display.

NOTE

There are six buttons that, if pressed, will cause partial or total disabling of either the five tuning functions, or the display of the frequency being tuned. These are the CHECK button (next to the CHANNEL selector), the CLAR TX button (during receive), the SELECT MR and RX M buttons, and the OFFSET FREQ and LOCK buttons. All except the OFFSET FREQ and LOCK buttons will cause LEDs other than only the VFO LED and HAM or GEN LEDs to light.

If one digit of the main display is flashing, press the KEY/ENT button so that the flashing stops before attempting any other commands.

To reinstate command of the tuning systems and displays by the VFO, press the SELECT VFO button (unless the CLAR TX LED is lit, in which case press the CLAR TX button; or if the LOCK button is depressed, press it again).

Receiver Operation in the Presence of Interference

The remaining controls for the receiver are designed so that the operator can reduce or eliminate the various types of noise, interference and distortion that might otherwise obstruct the clear, comfortable reception of a desired signal.

Before proceeding, make sure that the VFO selection and tuning techniques are understood, as described above. Operation will first be described for SSB reception on an amateur band, with the particular variations for other modes described afterwards.

Set the MODE selector to USB and tune to a crowded frequency in the 14, 21 or 28 megahertz phone band. Then tune in one particular signal which is being interfered with by other stations on nearby frequencies.

When the interfering stations are either all above or all below the desired signal it is usually only necessary to rotate the inner WIDTH control either to the left or right to cut the interference out of the receiver passband (the SHIFT control will also work for this, but may introduce interference from the other side of the signal).

When interfering stations are on both sides (higher and lower frequencies), first adjust the SHIFT control just to the point where the interference from one side is eliminated, and then rotate the WIDTH control in the opposite direction to eliminate interference from the other side. The optimum setting of these controls depends on the relative strengths and frequencies of the desired and interfering signals, and can be achieved only through practice.

Except during conditions of extreme crowding, such as during contests, the WIDTH and SHIFT controls should be returned to their 12 o'clock positions when tuning the receiver to a new frequency. This will provide the best fidelity and easiest tuning.

While the IF passband adjustments just mentioned will reduce the amount of noise and thereby increase the receiver sensitivity, intermodulation products caused by very strong signals on nearby frequencies may still cause unacceptable interference. This can be reduced or removed by the ATT (dB) control at the lower right corner of the front panel. When activated, the ATT LED above the main display will be lit. Those highly skilled in receiver operation will find this control especially useful for both this purpose and for comfortable reception on the lower frequency bands, or whenever a high ambient noise level is present. For fine adjustment of receiver attenuation, use the RF gain control. Setting this control to any position except fully clockwise will affect S-meter indication, so it should normally be set fully clockwise.

Pulse type noise, either short duration types such as from ignition systems and electric motors and switches, or long duration types such as from the "woodpecker", can be reduced or removed by depressing the NB button and adjusting the NB control from counterclockwise to clockwise just to the point where the noise is removed. Where strong signals are present on nearby frequencies, rotation

for free by
RadioAmateur.eu

Downloaded from www.Manualslib.com manuals search engine

of the NB control too far clockwise may cause unacceptable intermodulation. This may be removed by either the ATT (dB) control or counter-clockwise adjustment of the NB control. Again, optimum performance will be achieved through practice. When noise blanking is not required the NB button should be in the out position.

Heterodyne interference, such as from a carrier or CW signal, can be reduced or removed by activating the IF notch filter. Press the NOTCH button and then gradually adjust the NOTCH control while listening for a null on the heterodyne. If the heterodyne is strong enough to cause S-meter deflection, adjust the NOTCH control for minimum meter deflection.

If the frequency of the heterodyne is outside of the range of the notch filter, it can be easily removed by adjustment of the WIDTH and SHIFT controls as described previously. When the notch filter is not needed, the NOTCH button should be set to the out position.

When fast fading of SSB signals occurs, the AGC FAST button may be depressed to improve readability. This FAST position is also useful when tuning for weak signals in a crowded band. When tuning for very weak signals when there are no strong signals present, the AGC OFF switch can be pressed (this will also disable the S-meter).

CW Reception

In addition to the interference-reducing controls mentioned above for SSB, CW reception can be made extremely comfortable by installation of the optional CW filters XF-8.9HC and 455.8HCN. When installed, the first of these provides 600 Hz selectivity in the CW-W position, with the second narrowing the passband to 300 Hz in CW-N. Also, the operator may prefer using FAST AGC for CW reception, particularly at higher CW speeds.

The WIDTH and SHIFT controls will function in the same manner as for SSB, but adjustment will be more critical. It is strongly advisable to become familiar with the operation of these controls in an SSB bandwidth before attempting to use them for CW reception with the optional filters, as the narrowed passbands provided by these filters causes the useful adjustment range of these controls to be smaller. If the WIDTH control is adjusted far from the midrange position, the receiver passband will be cut off completely as the filter skirts will overlap, but by careful adjustment of these controls it is possible to adjust the receiver passband to any width between 0 and 300 or 600 Hz (depending on the filter selected).

All of the other noise and interference rejecting controls mentioned for SSB reception can be used similarly for CW. In addition, the APF (audio peak filter) can be used to enhance the selectivity of the audio stages of the FT-980 receiver. Although too narrow for use in SSB, this filter is especially useful for CW reception when no optional filters are installed, and for reducing wideband IF noise when optional filters are in use.

Before beginning CW reception, press the CW CAL button and adjust the MONI control for comfortable volume on the calibrating tone. If the pitch of this tone is too high or too low for the operator's preference, move the CW PITCH slide switch on the rear panel to the best position. The audio frequency of this tone is equal to the difference in frequency between the receiver center frequency and the carrier frequency of the transmitter, so that if a received signal is tuned to produce the same pitch tone in the receiver, the transmitter in the FT-980 will be tuned to the same frequency as that of the other station (being received).

APF Calibration for CW Reception

Once the desired calibration tone has been selected, the APF frequency can be calibrated to the same frequency, making further adjustment during operation unnecessary. To preset the APF frequency, procede as follows:

1. With the FT-980 set to a CW mode, set the rear panel MARK switch on, and set the ATT (dB) selector to "30".

2. Tune the receiver to the MARK signal (every 25 kHz), and press the CW CAL button. Adjust the MONI control, if necessary, to make the signals about the same volume, and then carefully tune the receiver slightly to zero beat the marker signal with the CW calibration signal.

for free by
RadioAmateur.eu

Downloaded from www.Manualslib.com manuals search engine

3. Press the CW CAL button again to switch it off, and then press the APF button (on). Now adjust the APF control for the strongest audio level on the MARK signal heterodyne. This should occur at some point between the 10 o'clock and 2 o'clock positions.

4. Turn the rear panel MARK switch off, and press the APF button again to switch it off. Return the ATT (dB) selector to "0".

Now, whenever a received signal is tuned to the same pitch as the CW CAL tone, not only will the transmitter be aligned to the correct frequency, but the APF will not require any further adjustment. Just switch it on after performing the steps in the following paragraph.

With the APF off, tune in the desired signal to the proper pitch (same as CW CAL tone). If QRM is present, adjust the SHIFT and then WIDTH controls as described previously to obtain the clearest signal with the least amount of interference and noise. If necessary, activate the NOTCH filter and adjust the NOTCH control to eliminate the strongest unwanted CW signal or heterodyne still present after adjusting the SHIFT and WIDTH.

Once the above adjustments are completed, just press the APF button. If the APF Calibration has been performed and the signal is tuned correctly, it should not be necessary to adjust the APF control to center the signal in the audio passband. Note that the APF should not be activated until after all tuning and IF stage adjustments are completed. To readjust the IF (SHIFT, WIDTH or NOTCH), and/or before tuning to a new frequency, first switch the APF off.

Because of the critical nature of the very narrow passband filters used in CW reception, it may be helpful to use the LOCK button to avoid accidental frequency changes via the main tuning knob once the desired station has been tuned in.

AM Reception

When the optional XF-8.9GA AM filter is not installed, the WIDTH and SHIFT controls will both function as IF shift adjustments. Because of the wider bandwidths used for AM reception, the sensitivity of these controls is much less critical than for SSB, and will usually be almost unnoticable for AM-W reception except for elimination of high-pitched heterodynes. Notice that the FT-980 includes as standard one filter for AM-W, using the second SSB-bandwidth filter for AM-N.

When the optional filter is installed, both IF SHIFT and WIDTH controls will function in the same fashion as for SSB, except for the wider adjustment range. However, the effect of the WIDTH control during AM-W operation may be barely noticable in some instances, because of the overall relative passband width of the second (AM-W) filter.

Aside from the above differences, the SHIFT and WIDTH controls can be used to eliminate interference and noise in the same manner as described previously for SSB. The NOTCH filter may also be used for carriers between about 500 and 2700 Hz from the desired carriers. AGC should generally be set to SLOW, except when tuning for weak signals or during conditions of very rapid fading.

The noise blanker will effectively blank noise when the peak amplitude of the noise pulses exceed that of the carrier, but otherwise the NB switch should be off.

Since most shortwave broadcast stations adhere to the 5 kHz channel spacing plan, the 5 kHz UP and DOWN buttons, together with the REPEAT button, are the best choice for tuning these stations. To use this feature, press the VFO button and the LOCK button, and then use the keypad to enter a starting frequency which is any multiple of 5 kHz. To tune the band, just press REPEAT and then the 5 kHz UP or DOWN button.

When using the 5 kHz stepping buttons for tuning AM signals, it becomes practical in cases of heavy interference to use either SSB mode to gain additional selectivity and SHIFT/WIDTH control. This is because each station will automatically be tuned to zero beat at each 5 kHz channel increment (assuming the station is transmitting on frequency). If the station is slightly off frequency, or trans-

for free by
RadioAmateur.eu

Downloaded from www.Manualslib.com manuals search engine

mitting in between two 5 kHz channels, a heterodyne will be heard, in which case the station can be tuned by pressing the LOCK button again (to unlock the tuning knob) and the RX CLAR button. To return to the 5 kHz channels, just press the RX CLAR button off.

The TAB function, described on page 31, is also extremely useful for presetting the band limits of shortwave broadcast bands.

FM Reception

Receiver adjustments for FM are limited to the AF and RF gain, TONE, SQL (squelch), ATT (dB) and tuning functions. Other controls are not needed, but affect S-meter performance. Meter I serves as a center-tuning meter for FM reception, so that when an FM signal is properly tuned this meter deflects exactly to midrange. If the meter deflects to the right of center, tune lower in frequency (counter-clockwise rotation of the tuning knob), and vice-versa if the meter deflects to the left. The S-meter can still be used to indicate relative signal strength.

FSK Reception

The same filters that are used for SSB reception are used for FSK, so that the SHIFT and WIDTH controls will respond in the same manner. However, reception of signals using different FSK shifts requires correspondingly different settings of these controls for optimum selectivity. While narrow shift (170 Hz) will be optimized with a narrow receiver passband, wider shifts will require a wider passband, i.e.; less offset of the WIDTH control.

Other receiver adjustments are similar to SSB.

TRANSMITTER OPERATION

The solid state transmitter in the FT-980 requires no peaking or adjustment once the transmitting frequency has been selected, other than gain setting for the correct power output level. When properly adjusted, the transmitter will provide exceptionally clean output, due to the very conservative design and high voltage operation of the final circuits. However, there are certain precautions that must be taken at all times when transmitting to avoid possible damage to the transceiver or improper signal transmission.

Never transmit without having a dummy load, or antenna tuned to the transmitting frequency, connected to the transceiver. If there is any doubt about transmitting on a particular antenna at a certain frequency, check the SWR first, as described on the next page.

While transmitting, never move the MODE selector, as to do so could damage the transceiver. Also, avoid changing frequency during transmission. First return to receive, tune to the transmit frequency, and listen for at least a minute or two to make sure that the new frequency is not already occupied, or ask if the frequency is occupied, and then listen.

When transmitting CW using more than 50W output power, avoid holding the key down continuously for more than 30 seconds. If, for testing purposes, it is necessary to transmit for close to 30 seconds, let the transceiver cool in the receive state for at least two minutes before transmitting again. Output power will be automatically reduced if the temperature of the finals becomes too high.

Never begin to transmit when using an antenna without first listening for a few minutes to make sure that the frequency is clear. This will avoid accidental interference to other stations.

The following procedures describe adjustment of the transmitter for the maximum safe output power for each mode. Exceeding these levels may cause distortion and/or unwanted spurious radiation, as well as excessive heating and shortened equipment life. Yaesu strongly recommends that, once initial contact has been verified, power output be reduced to the minimum level necessary for continuing communication. This can greatly increase the life of the transmitter components while minimizing possible interference to others.

for free by
RadioAmateur.eu

Downloaded from www.Manualslib.com manuals search engine

CHECKING AND MEASURING SWR

Before transmitting, the SWR of the antenna system should be checked at the operating frequency to ensure that the proper impedance is being presented to the transmitter. The FT-980 final stages include protection circuits that will automatically reduce the output power if SWR is high, with only about 75% of full power available with an SWR of 3 (to 1).

The first procedure to follow checks the approximate SWR using only ten to twenty watts. Use this procedure whenever the impedance of the load is unknown or in doubt for a particular frequency. The low power will help to prevent damage to the equipment or load, though the SWR indication on the meter will not be as accurate as the later procedure provides. If the load SWR checks below 3 in the low power check, procede to the high power test. Even though the SWR may have been previously measured and the load impedance known to be close to 50 ohms, it is still advisable to check the SWR occasionally so that any problems that may develop in the antenna system will be detected before possible damage occurs.

During SSB transmission the ALC indication on Meter II should be monitored. Sudden shifts of peak ALC level and/or erratic ALC behavior indicate possible problems with the antenna system, and the SWR should be checked immediately.

To check SWR, the ALC METER switch should be set to the NORMAL (out) position, and the MODE selector set to FSK. Preset the DRIVE control fully counterclockwise (minimum), and the FWD SET control fully clockwise. Set the METER selector to the SWR position, and tune the transceiver to the test frequency. The AMGC button should be in the off (out) position.

Now press the MOX button to activate the transmitter, and gradually advance the DRIVE control to obtain full scale indication on Meter I (FWD SET mark on the bottom scale). If full scale deflection is not obtained before the DRIVE control reaches the 12 o'clock position, the SWR is too high to warrant operation. Note the SWR indication on the middle scale of Meter II, and press the MOX button again (to the out position).

If the SWR indication was much above 3, the antenna system is too far from resonance to be used at the test frequency without substantial degradation of performance. SWR indications close to 3 indicate poor antenna matching. However, an antenna tuner can be used to tune the antenna system to provide the proper match at the test frequency. Of course this will not change the radiating qualities of the antenna system itself, and will require retuning whenever the transmitting frequency is changed, so it is better to correct the antenna or feedline mismatch first, if possible.

Little or no deflection of Meter II indicates a matched antenna system for use at the test frequency. To measure the SWR more precisely at higher power; reduce the FWD SET control, switch the METER selector to the IC position, press the MOX button and advance the DRIVE control to obtain an indication of about 5 amps on the IC scale of Meter I. Then switch the METER selector back to SWR and this time adjust the FWD SET control for full scale deflection on Meter I (FWD SET mark). Note the indication on the SWR scale of Meter II, and press the MOX button off. Again, if the SWR is above 3 a change in the antenna system or frequency is warranted.

SSB Transmission

For single sideband transmission without the speech processor, set the METER selector to IC and preset the MIC gain control to midrange. Also preset the MONI control to about the eleven o'clock position. The DRIVE control is not used.

Tune the transceiver to a clear frequency, and then close the PTT switch and speak into the microphone the word "four" several times while watching the ALC deflection on Meter II. Adjust the MIC gain control, if necessary, to produce an ALC deflection to about midrange on Meter II.

If the MONItor audio in the speaker or headphones is breaking up, reduce the MONI level; or if not loud enough, increase it. When speaking the word "four" the IC deflection on Meter I will be about 3 amperes for full power output. Whistling into the microphone should cause the IC indication to rise to 8 amperes, but must not cause the ALC indication on Meter II to go into the red zone. If it does,

for free by
RadioAmateur.eu

Downloaded from www.Manualslib.com manuals search engine

reduce the MIC gain setting. High levels of ALC do not provide more output power.

Switch the METER selector to the PO position to check power output on Meter I. Once contact has been established it is usually unnecessary to maintain full power, in which case the MIC gain control should be reduced as much as possible.

For VOX (voice actuated receive-to-transmit) operation, simply speak into the microphone without closing the PTT switch, and adjust the VOX control from the fully clockwise position just to the point where the transmitter is activated each time a new word is spoken (use normal conversational speech). The hang-time from the end of a sentence to the activation of the receiver can be adjusted with the DELAY control.

If the audio from the receiver triggers the VOX system, make the above adjustment with the AF control set for low receiver volume, and then increase the volume (in the speaker) to the desired operating level. Now adjust the A-TRIP control on the rear panel just to the point where the receiver audio ceases to key the VOX.

Speech Processor Adjustment

When the speech processor is activated the MIC gain control is disabled. Preset the COMP control to midrange, and then speak into the microphone while adjusting the DRIVE control to the point where ALC deflection on Meter II just begins (higher levels will not produce more output power, but may cause distortion).

Now set the METER selector to the COMP position, and adjust the COMP control for peaks of 5 to 10 on the COMP scale of Meter I. The IF MONItor feature can be used during this adjustment to monitor the effects of the processor, in which case headphones will generally provide a more accurate reproduction than a loudspeaker. If ambient noise, such as from a cooling fan or other equipment, is heard on the transmitted signal, press the AMGC button to activate the automatic microphone gain control system.

To reduce power once contact is established, reduce the DRIVE level, or simply press the PROC button off, and adjust the MIC gain.

CW Transmission

Full break-in (QSK) operation is possible with the FT-980 for simplex operation. For split-frequency operation full break-in must not be attempted unless both transmit and receive frequencies are in the same amateur band and on or derived from the HAM VFO, or damage may result. Also, when using a linear amplifier, do not attempt full break-in operation unless the linear is specially designed for this, in which case refer to page 21 for proper interconnections, and set the LIN AMP switch (on the rear panel) to position 1. Please read the caution notice on page 32.

Connect a CW straight key or external keyer output line to the MANUAL jack on the rear panel, or if the optional Keyer Unit is installed, connect keyer paddles to the AUTO jack. Preset the DELAY control to midrange, and the DRIVE control fully counterclockwise. Set the METER selector to IC, and the VOX control fully clockwise.

Close the key and adjust the MONI control for comfortable sidetone volume. Now tune to a clear frequency, and operate the key or paddle while adjusting the DELAY control for the desired semi break-in delay, or, for full break-in, set the DELAY control fully counterclockwise into the click stop.

Adjust the DRIVE control just to the point where ALC action begins, as shown on METER II, for full power output. More DRIVE will not produce higher output power, but may cause key clicks. The IC indication on Meter I will be 10 amperes for full power output.

Refer to the section on CW reception (page 25) for details on how to tune for CW transmission. Once contact has been established with another station, use the DRIVE control to reduce the output power to the minimum level necessary.

If the operator switches modes from SSB to CW often, it may be convenient to keep the VOX control set to the level required for voice operation. However, CW transmission will be disabled if this level is insufficient, in which case the VOX control may be set to the point where the transmitter always responds to CW keying, and then advanced slightly clockwise from that point, if necessary, for voice operation.

for free by
RadioAmateur.eu

Downloaded from www.Manualslib.com manuals search engine

AM Transmission

Preset the MIC gain and DRIVE controls fully counterclockwise, and set the METER selector to the PO position. The speech processor is not used, and so the PROC button should be in the off (out) position.

To set the proper carrier level, first make sure that the frequency is clear and then press the MOX button. Advance the DRIVE control to obtain an indication of 25 watts on the PO scale of Meter I, and then press the MOX button off. Never set the DRIVE control for more than 25 watts of carrier for AM operation, as overheating of the finals may result.

To adjust modulation, close the PTT switch and speak into the microphone while advancing the MIC gain control and watching Meter I for additional deflection. Now whistle into the microphone. The MIC gain control may be advanced until the PO indication on Meter I peaks at 80 watts with a whistle. The VOX system may be used in the same manner as described for SSB.

Once contact has been established with another station, reduce the level of the DRIVE control as much as possible.

FM Transmission

This mode is generally used only above 29 MHz, and thus the FT-980 may be used for this mode up to 29.7 MHz, or with a Transverter for operation on the VHF and UHF bands. The V/U button on the front panel works through the ACC-1 jack on the rear panel to provide signals for transverter control. When transmitting FM on the 29 to 29.7 MHz range, power output must be limited to 50 watts to avoid overheating of the final transistors from the continuous duty cycle of FM.

With the METER selector set to PO, begin by presetting the DRIVE control fully counterclockwise. Then close the PTT switch and advance the DRIVE control to obtain a PO indication of 50 watts on Meter I. After contact is established, simply reduce the DRIVE level.

FSK Transmission

When an optional modem is connected to the FSK Jack on the rear panel, the FT-980 will produce an FSK signal from its internal AFSK generator. Set the AMGC and PROC buttons off (out position), and set the METER selector to PO. Close the PTT line and adjust the DRIVE control for a PO indication of 50 watts on METER I. After contact is established, simply reduce the DRIVE level.

MEMORY OPERATION

Please review the descriptions of the memory-related controls (WRITE 1, WRITE 2, MEMORY CHANNEL, SHIFT and CHECK) described on pages 9 and 10.

The operator may store a frequency from either the HAM or GEN VFO into any memory channel at any time, simply by pressing the WRITE 1 button (for channels 1 through 8) or the WRITE 1 and WRITE 2 buttons simultaneously (for channels 9 through 12). The frequency that is shown on the Main display will be stored, so if the receiver clarifier is activated, the clarified frequency will be stored (not the basic VFO frequency). Along with frequency, the VFO type (HAM or GEN) and the mode will also be stored. Previous data stored in the selected channel will be erased.

To recall a memory channel, press the SELECT MR button. The frequency and mode will be shown on the Main Display. The MR LED above the Main Display will be lit, along with the LED indicating which VFO the memory was recorded from, at the right side of the front panel. Whenever the MR LED is lit operation is on the selected memory channel.

Once a memory channel has been recalled it is possible to tune the frequency of the (displayed) channel by pressing the SHIFT button. However, it is not possible to change the mode or source VFO of the channel. To store the new frequency to which the memory has been tuned, it is necessary to press the appropriate WRITE button(s). If both the original channel frequency and the new frequency to which that channel has been tuned are to be retained, the MEMORY CHANNEL selector may be rotated to a new channel position once the

for free by
RadioAmateur.eu

Downloaded from www.Manualslib.com manuals search engine

new frequency is displayed, and the new frequency can then be stored in this new channel position by pressing the appropriate WRITE button(s). The original frequency will remain in the original channel.

The CHECK button may be pressed at any time to check the mode and frequency contents of any or all memory channels without affecting actual transceiver operation. The M CHECK LED above the Main Display will be lit, warning the operator that the frequency and mode information on the Main Display is indicating the contents of the selected memory channel, and not necessarily the conditions of operation (which can be from another channel previously selected, or a VFO). HAM/GEN VFO data stored in the memory is not indicated during M CHECK. Do not tune the transceiver when the M CHECK function is activated (and the M CHECK LED lit), as it may not be possible to observe the operating frequency.

The Sub Display shows only the frequency of the VFO selected when frequency control was last commanded by the VFO, regardless of the memory function in operation.

To return control to the VFO, press the SELECT VFO button. The MR LED above the Main Display will be extinguished, and the VFO LED will be lit. This must be done to change the mode or source VFO of a memory channel. To do so, simply select the desired source VFO (HAM or GEN) and mode, and then tune the VFO to the desired frequency. Then set the MEMORY CHANNEL selector to the desired position, and press the appropriate WRITE button(s). It is not possible to transfer a memory frequency directly to the VFO.

CLARIFIER OPERATION

The clarifier function is activated by the CLAR RX and TX buttons, allowing adjustment of the operating frequency up to plus or minus 10 kHz from the operating frequency displayed before the clarifier function was activated.

The clarifier can be tuned by the Main Tuning Knob, scanning buttons, or 5 kHz stepping buttons. The original operating frequency can be a VFO, memory channel, or shifted memory frequency; and turning off the clarifier function (by pressing the RX or TX button when the respective LED is lit) will return operation to the original frequency, except in the following condition: if the BAND DOWN or UP buttons are pressed, or if the KEY/ENT button is pressed while the clarifier is on.

Use the RX clarifier if a station with which communication is in progress begins to drift, to change the FT-980 receiving frequency without changing the transmitting frequency. To bring the transmitting frequency to that of the clarified receiver frequency, press the TX clarifier button.

The clarified frequency can be stored into a memory by pressing the appropriate WRITE button(s). When a contact is finished, turn the clarifier off before tuning to a new frequency. While the clarifier is activated, the frequency displayed on the Sub Display will remain that of the VFO, and will not change with clarifier adjustment.

TAB SET

This function is useful for limiting the operating range of the FT-980 to user-defined limits. For shortwave listening this function can be used to preset the limits of a particular shortwave broadcast band, while for amateur operation this function can be used to limit operation to the legal band or sub-band limits of the operator's license class or government regulations, thus preventing accidental illegal transmission.

It is possible to program different limits in both the HAM and GEN VFOs, but the HAM VFO requires that the tab limits be within the existing limits of HAM VFO coverage (the amateur bands). The memory backup system will retain the tab limits stored in both VFOs.

To program the tab limits, select the desired VFO and tune to the desired lower limit, Press the TAB SET LOWER button. Then tune the VFO to the desired upper limit, and press the UPPER button. Now to activate the tab limit function, press TAB SET ON.

Activating the TAB function during memory operation will automatically cause tuning control to revert to the VFO. If the VFO is tuned outside of the tab limits at the time that the TAB SET ON

for free by
RadioAmateur.eu

Downloaded from www.Manualslib.com manuals search engine

button is pressed, the VFO frequency will be lost, and replaced with the frequency of the nearest edge of the tab limits. While the tab function is on, the LED above the TAB SET ON button will be lit. Pressing either this button, or the BAND UP, BAND DOWN, MR, RX V, RX M, SHIFT/LDB or KEY/ENT buttons will cancel the tab function and return the VFO to normal operation.

When programming tab limits for the HAM VFO, it is possible to program the lower limit in one band and the upper limit in another, thus limiting operation to the higher end of one band and the lower end of a higher band, with or without other bands in between. The preset ham band limits in the FT-980 will thus serve as natural limits along with those program by the tab function. However, it will be necessary to press the BAND UP or DOWN buttons to change bands, and this will defeat the tab system until the TAB SET ON button is pressed again.

SPLIT FREQUENCY OPERATION

Please review the descriptions of the SELECT RX V, RX M and OFFSET FREQ buttons on page 9. It is possible to perform split frequency operation over any portion of the frequency range of the FT-980, but **full break-in (QSK) operation must not be attempted except when both receive and transmit frequencies are in the same band and from the HAM VFO only.** Make sure that the DELAY control is set out of the click stop for cross-band operation.

Transmission is disabled from either the GEN VFO, or from a memory derived from the GEN VFO. However, reception during non-QSK split operation is permitted in these conditions (from the GEN VFO). Transmission can be made on either the HAM VFO or on memories derived from the HAM VFO. Crossband, crossmode operation is permissible, but with semi break-in (VOX) or PTT switching only.

Whenever split operation is selected by the RX V or RX M buttons, the SPLIT LED above the Main Display will be lit, along with either the VFO or MR LED (indicating which is the source for the present operating state, transmit or receive). When using the RX M (receive on memory, transmit on VFO) function, the SHIFT button may be pressed to allow tuning of the memory frequency. In this case, the transmit frequency (of the VFO) will be displayed on the Sub Display, while the receiving (memory) frequency is shown on the Main Display.

Press the OFFSET button to obtain the difference between the transmit and receive frequencies on the Main Display (if less than 10 MHz). Tuning the VFO or shifted memory will then show as a change in offset on the Main Display.

CAUTION

OUR WARRANTY DOES NOT COVER DAMAGE CAUSED BY ATTEMPTING TO OPERATE THE FT-980 WITH FULL BREAK-IN (QSK) WHEN THE TRANSMIT FREQUENCY IS DIFFERENT THAN THE RECEIVE FREQUENCY (SPLIT OPERATION) IF THE TWO FREQUENCIES ARE NOT IN THE SAME AMATEUR BAND, OR IF EITHER FREQUENCY IS TUNED FROM THE GEN VFO, OR FROM A MEMORY CHANNEL WHOSE CONTENTS ARE DERIVED FROM THE GEN VFO.

NOR DOES OUR WARRANTY COVER DAMAGE CAUSED BY ATTEMPTING TO OPERATE WITH FULL BREAK-IN (QSK) WHEN USING A LINEAR AMPLIFIER THAT IS EITHER NOT DESIGNED SPECIFICALLY FOR QSK, OR NOT CONNECTED PROPERLY TO THE FT-980 FOR SUCH OPERATION.

for free by
RadioAmateur.eu

Downloaded from www.Manualslib.com manuals search engine

OPTIONAL CRYSTAL FILTER INSTALLATION

OPTIONAL FILTER INSTALLATION

This procedure is for installation of CW-W filter XF-8.9HC (Kit no. D2000011), AM filter XF-8.9GA (Kit no. D2000012), and CW-N filter XF-455.8MCN (Kit no. D2000035); or any one or combination of these.

1. Disconnect the transceiver from the power source, and place it upside down on the work surface. Then remove the ten screws affixing the bottom cover, and the two screws affixing the carrying handle. Remove the cover and handle.

2. Locate the IF Unit, shown in the figure below, and remove the six screws marked with a star.

3. If installing the **XF-8.9HC CW-W filter**, refer to the figure below for the correct location on the board, and bolt the filter into place using the hardware supplied with the kit. Then solder the filter terminals into place on the solder side of the board. For this filter only, locate Jumper A as shown below, and change the connection of this jumper from the SSB to the CW terminal.

4. If installing the **XF-8.9GA AM filter**, refer to figure below for the correct location on the board. Notice that there is a 100-ohm resistor in this filter location, which must be carefully unsoldered and removed before the filter is installed. Once this resistor has been removed, hold the filter snugly in place on the board while soldering the terminals on the solder side of the board.

5. For installation of the **XF-455.8MCN CW-N filter**, refer to the figure below for the correct location on the board. Hold the filter snugly in place on the board while soldering the terminals on the solder side of the board. Now refer to the figure below for the location of Jumper B, and change the connection of this jumper from the SSB to the CW position (but **only** when installing this filter).

6. Replace the IF Unit and its six screws, making sure that no wires are stressed or pinched in the process. Then replace the bottom cover and its ten screws, followed by the carrying handle and its two screws.

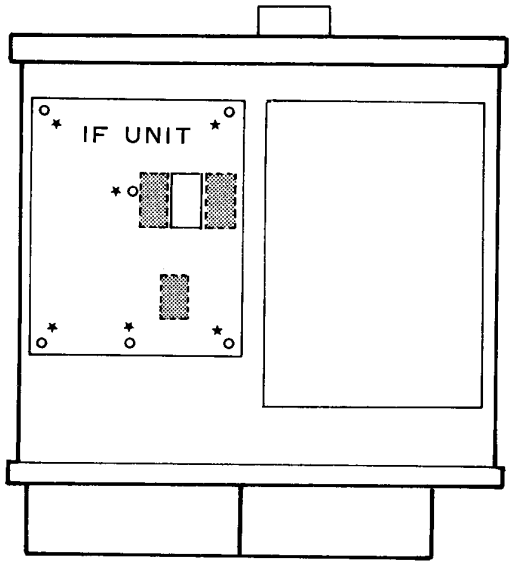

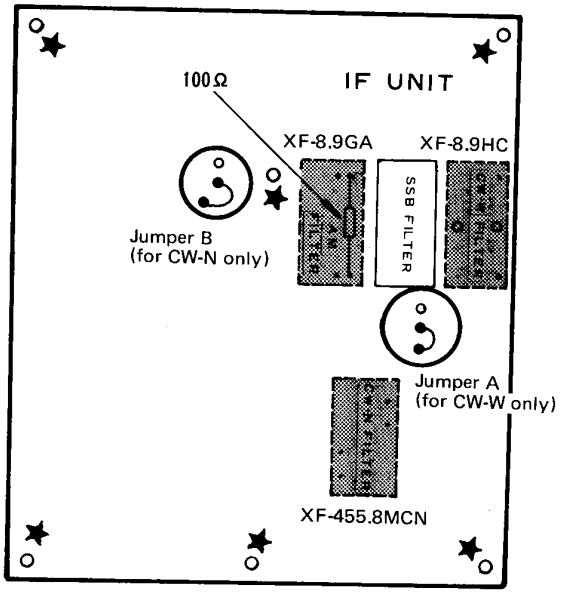

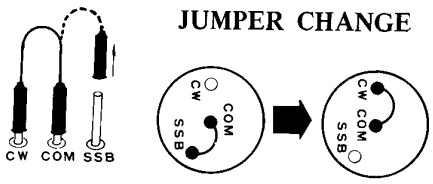

for free by
RadioAmateur.eu

Downloaded from www.Manualslib.com manuals search engine

KEYER UNIT INSTALLATION

Requires optional Keyer Kit no. D3000026, consisting of:

One Keyer Unit, part no. C017280
Two mounting screws

1. Remove the eight screws affixing the top cover, and the two carrying handle screws. Remove the cover slowly, so as not to stress the speaker wires.

2. Referring to the figure below, locate the FSK Unit and 8-pin connector P_{98} taped behind the meters. Using the two supplied mounting screws, affix the Keyer Unit to the FSK Unit as illustrated. Then connect P_{98} to the connector on the Keyer Unit.

3. Connect keyer paddles to the AUTO jack on the rear panel, as indicated in the figure. Set the FT-980 controls for CW transmission, but with the DRIVE control fully counterclockwise. Squeeze the paddles and adjust the KEYER control on the front panel for the desired speed, and then adjust the potentiometer on the KEYER Unit for the desired keying weight.

4. Replace the top cover and its eight screws, and the carrying handle and its two screws. Installation is now complete.

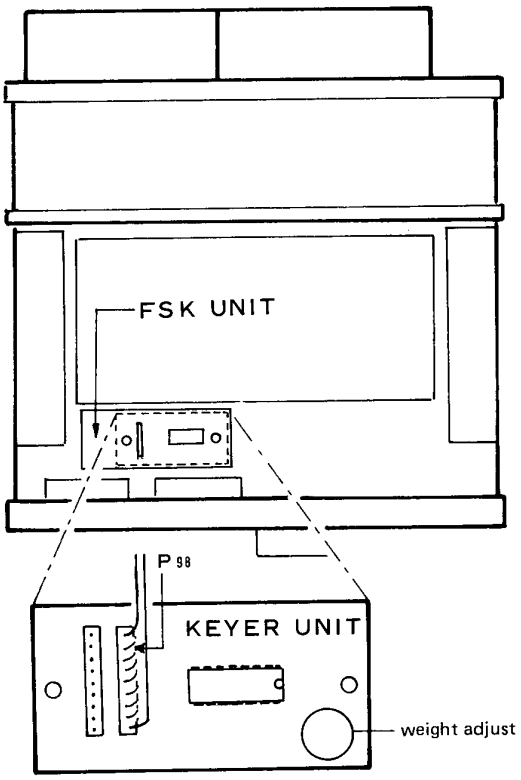

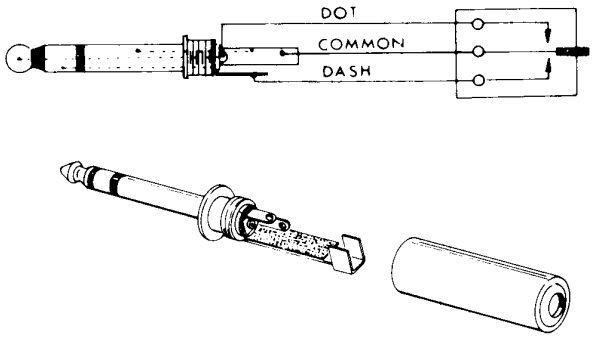

Keyer paddle plug connections

for free by
RadioAmateur.eu
Downloaded from www.Manualslib.com manuals search engine

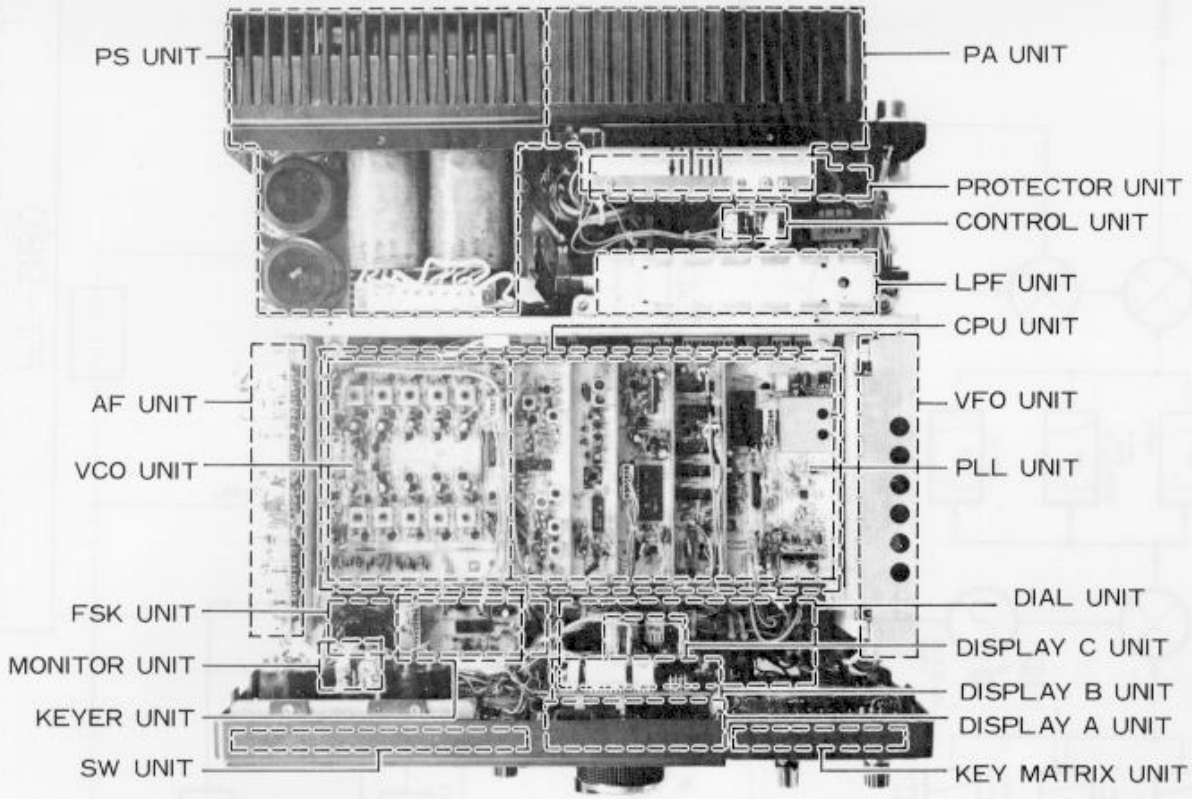

TOP VIEW

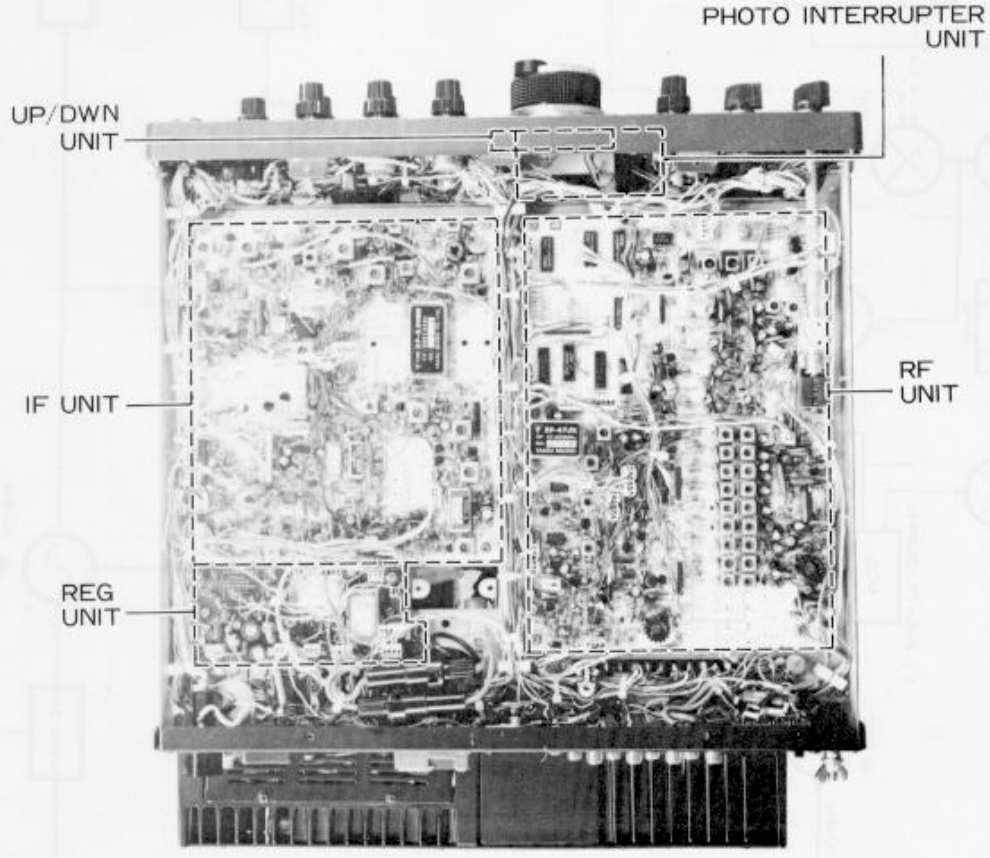

BOTTOM VIEW

for free by
RadioAmateur.eu

Downloaded from www.Manualslib.com manuals search engine

FT-980
FREQUENCY RELATIONSHIPS

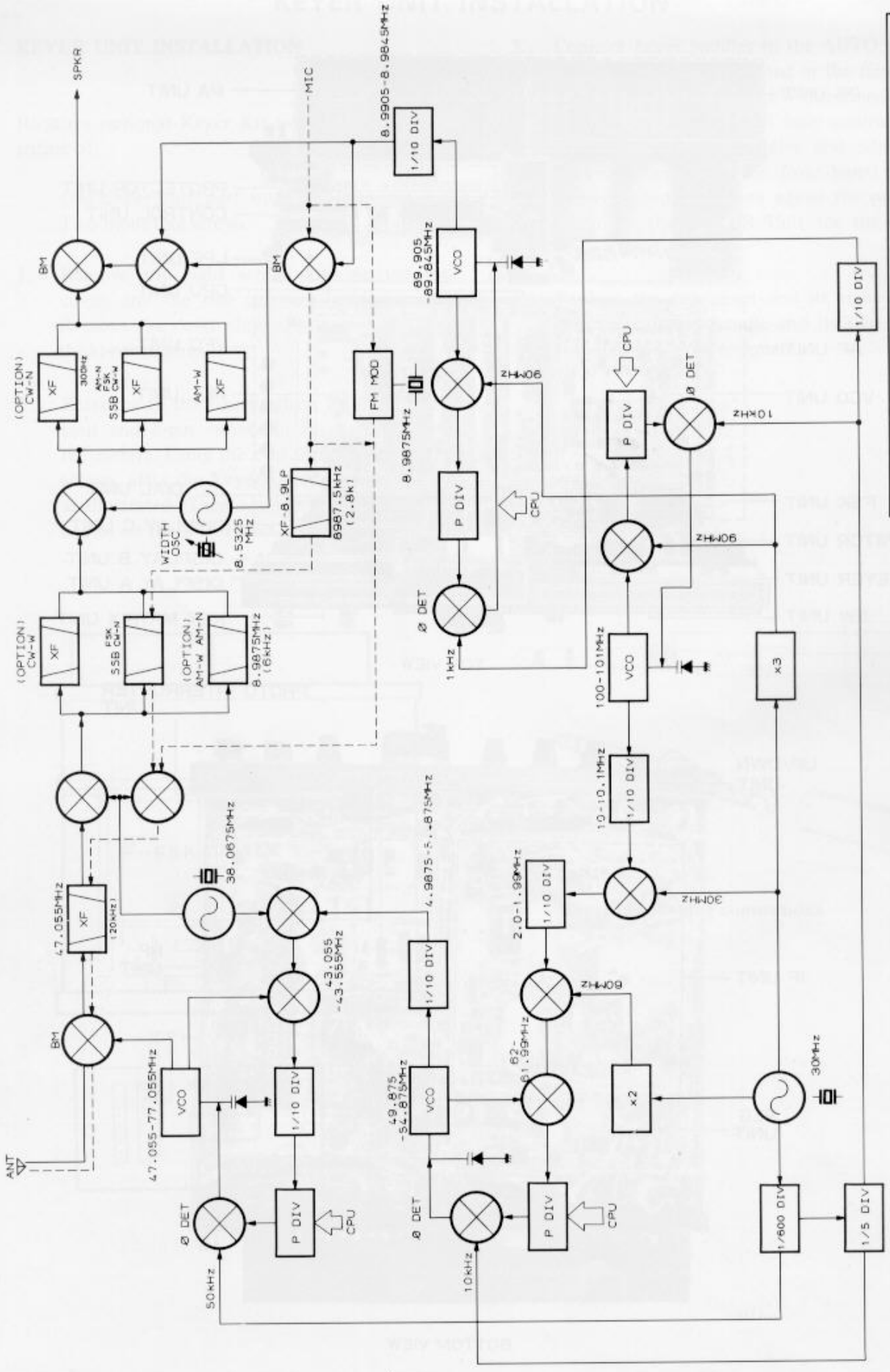

for free by
RadioAmateur.eu

Downloaded from www.Manualslib.com manuals search engine

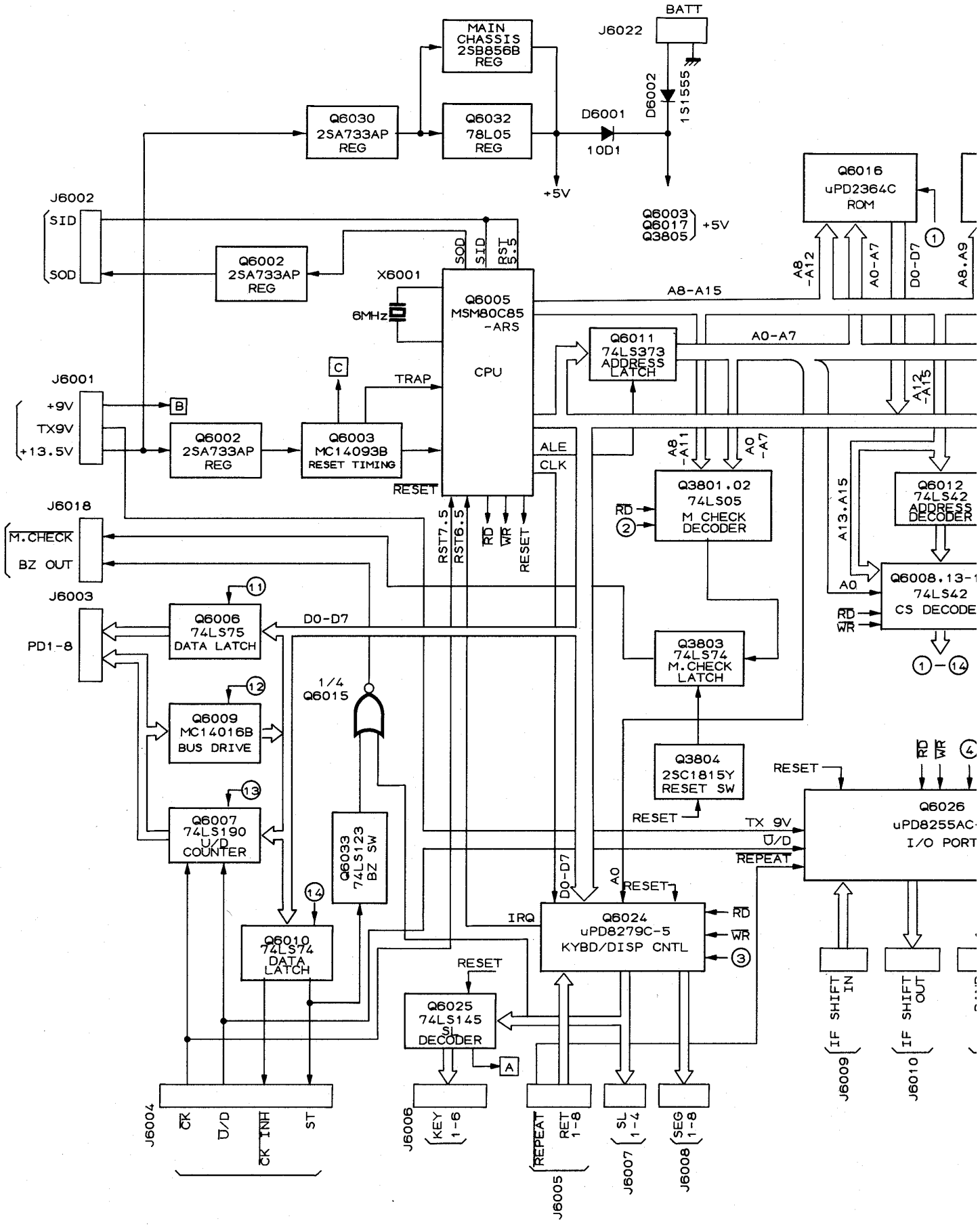

for free by
RadioAmateur.eu

Downloaded from www.Manualslib.com manuals search engine

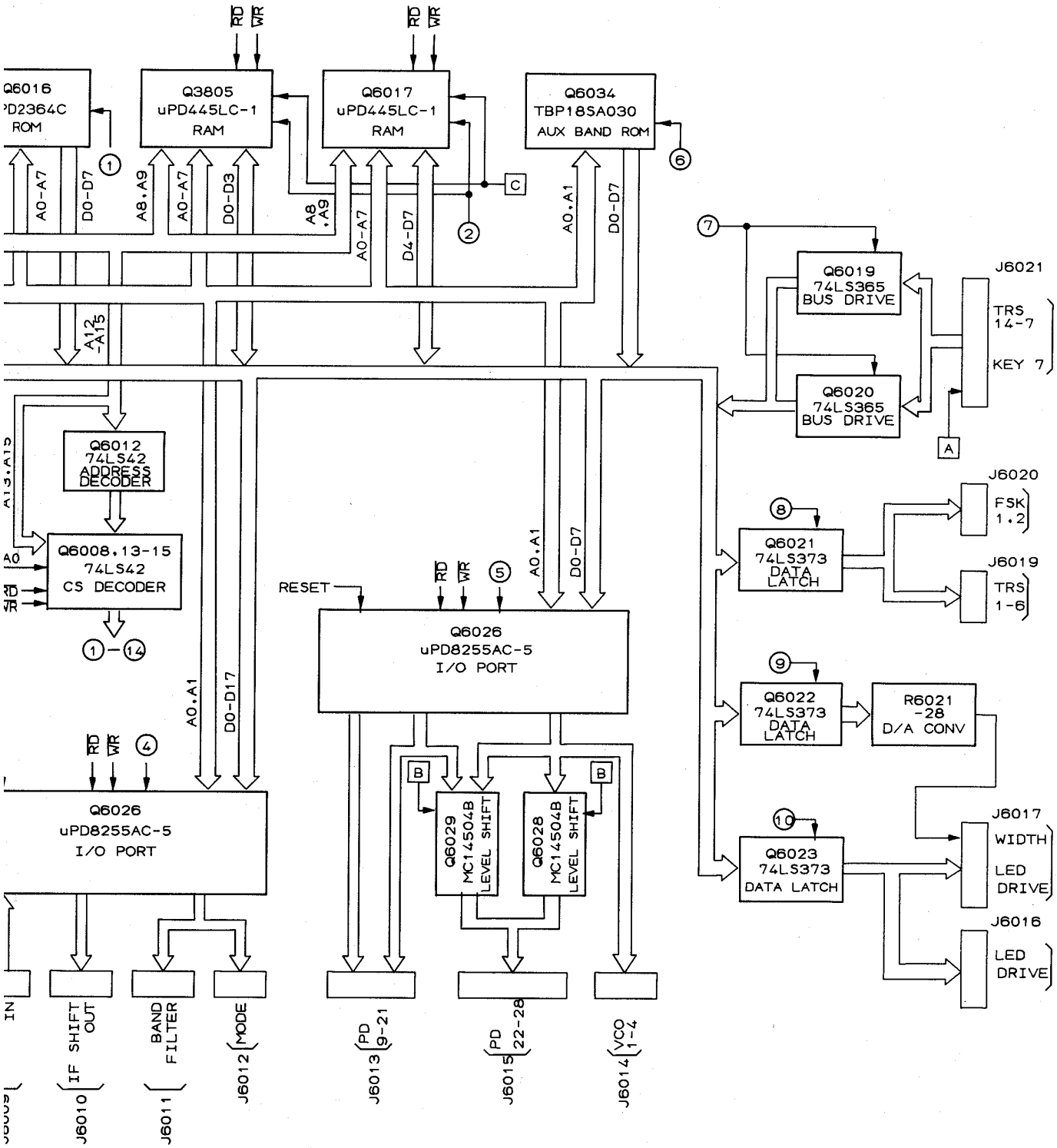

FT-980
CPU BOARD CIRCUIT DIAGRAM

for free by
RadioAmateur.eu

Downloaded from www.Manualslib.com manuals search engine

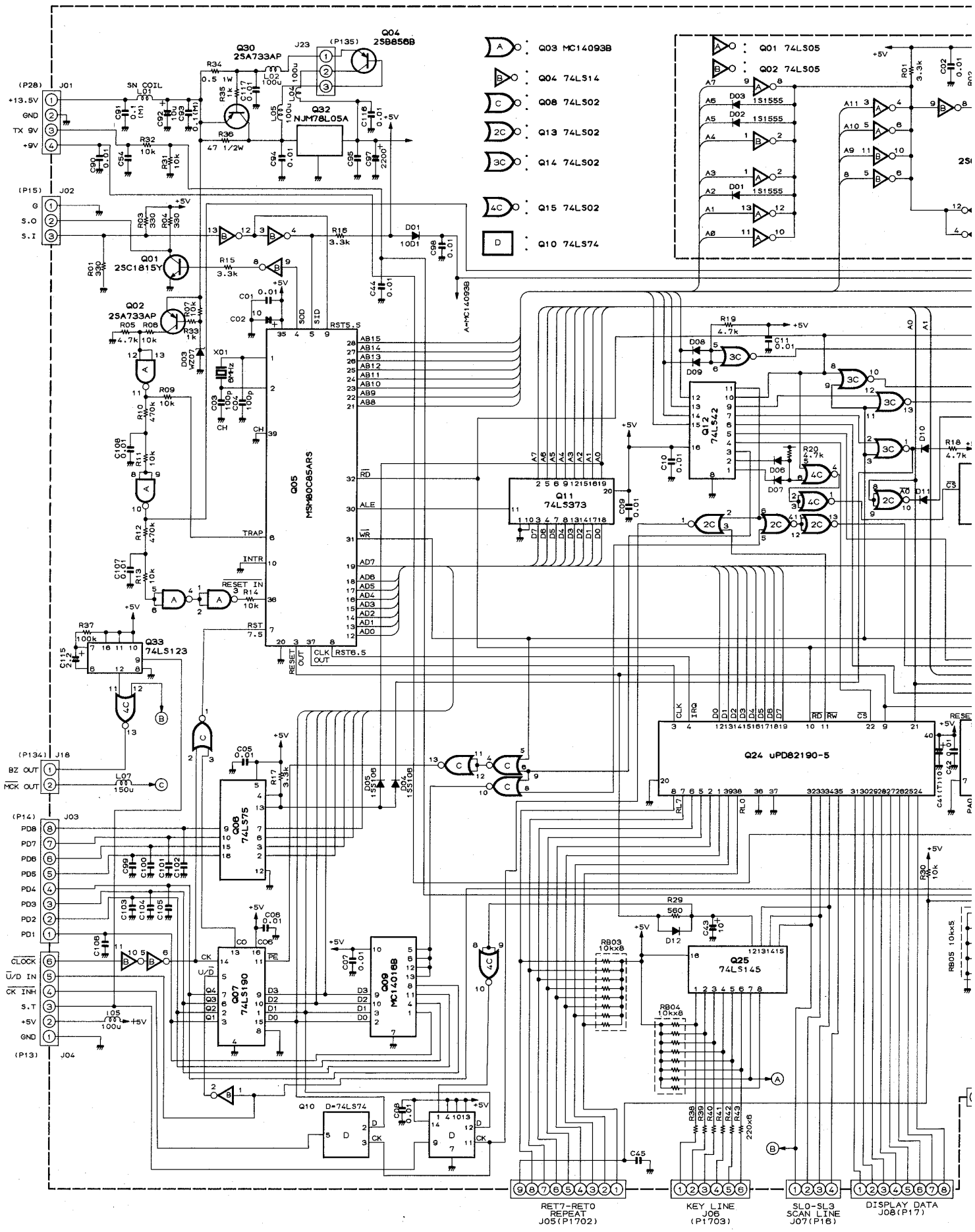

for free by
RadioAmateur.eu

Downloaded from www.Manualslib.com manuals search engine

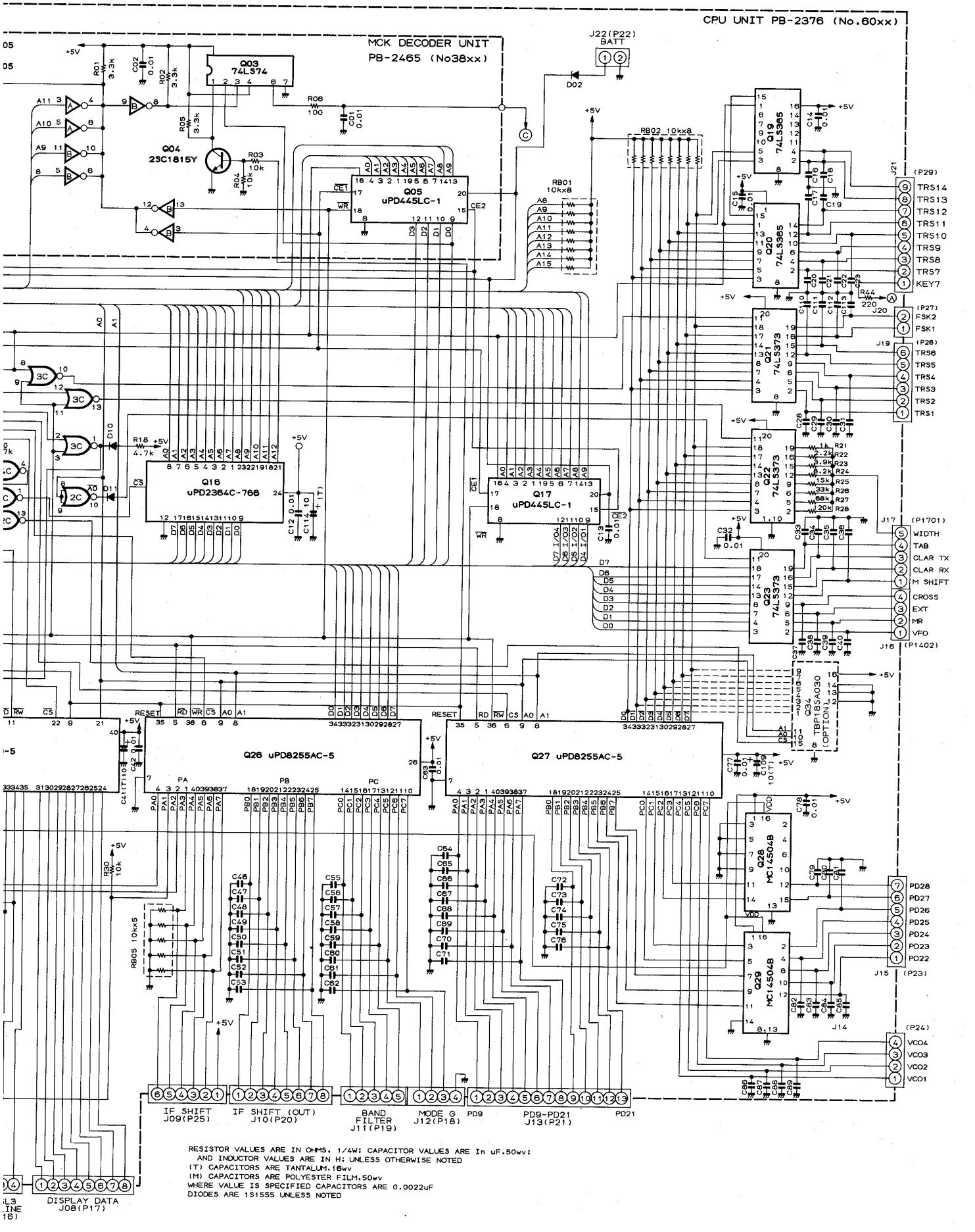

for free by
RadioAmateur.eu

Downloaded from www.Manualslib.com manuals search engine

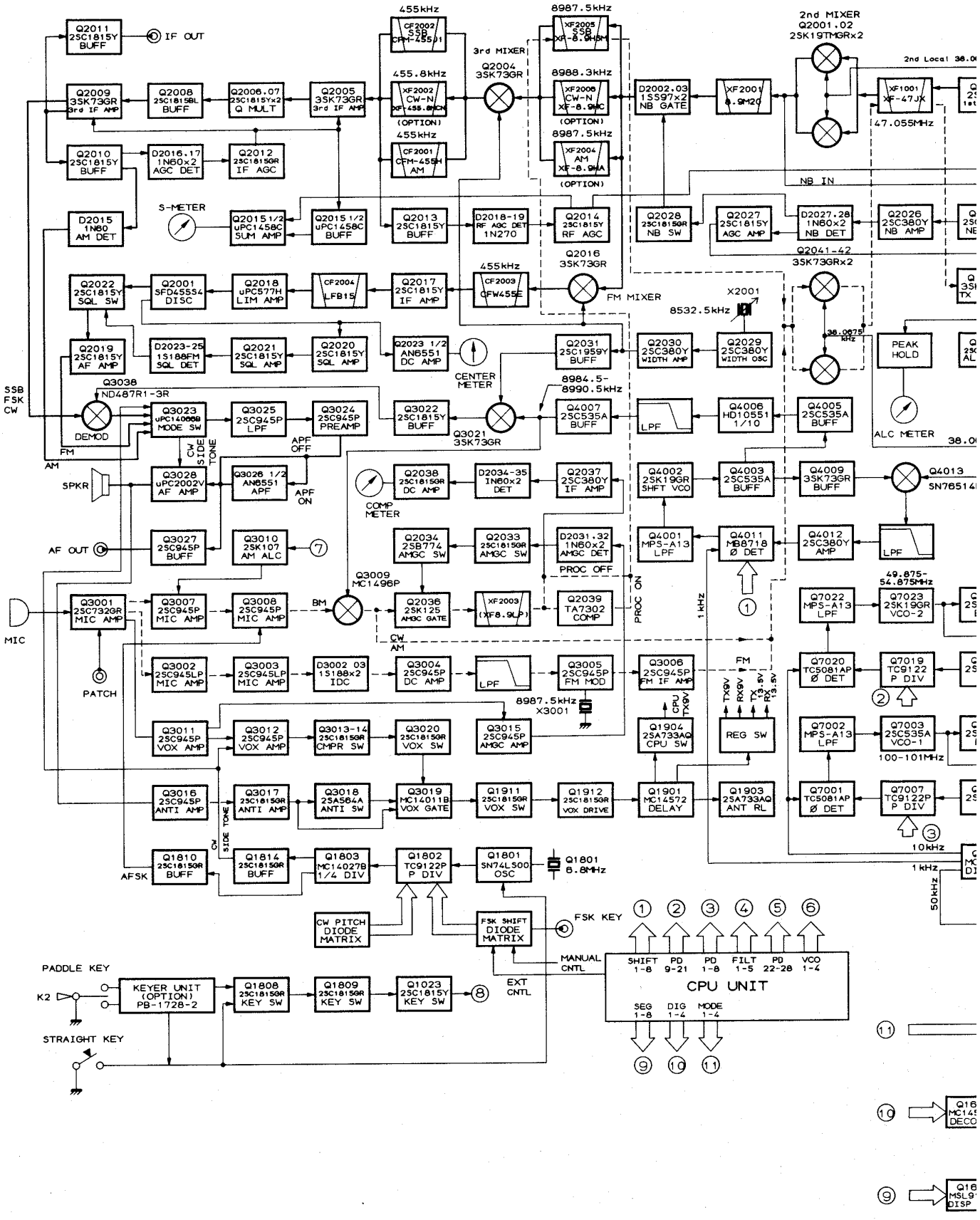

for free by
RadioAmateur.eu

Downloaded from www.Manualslib.com manuals search engine

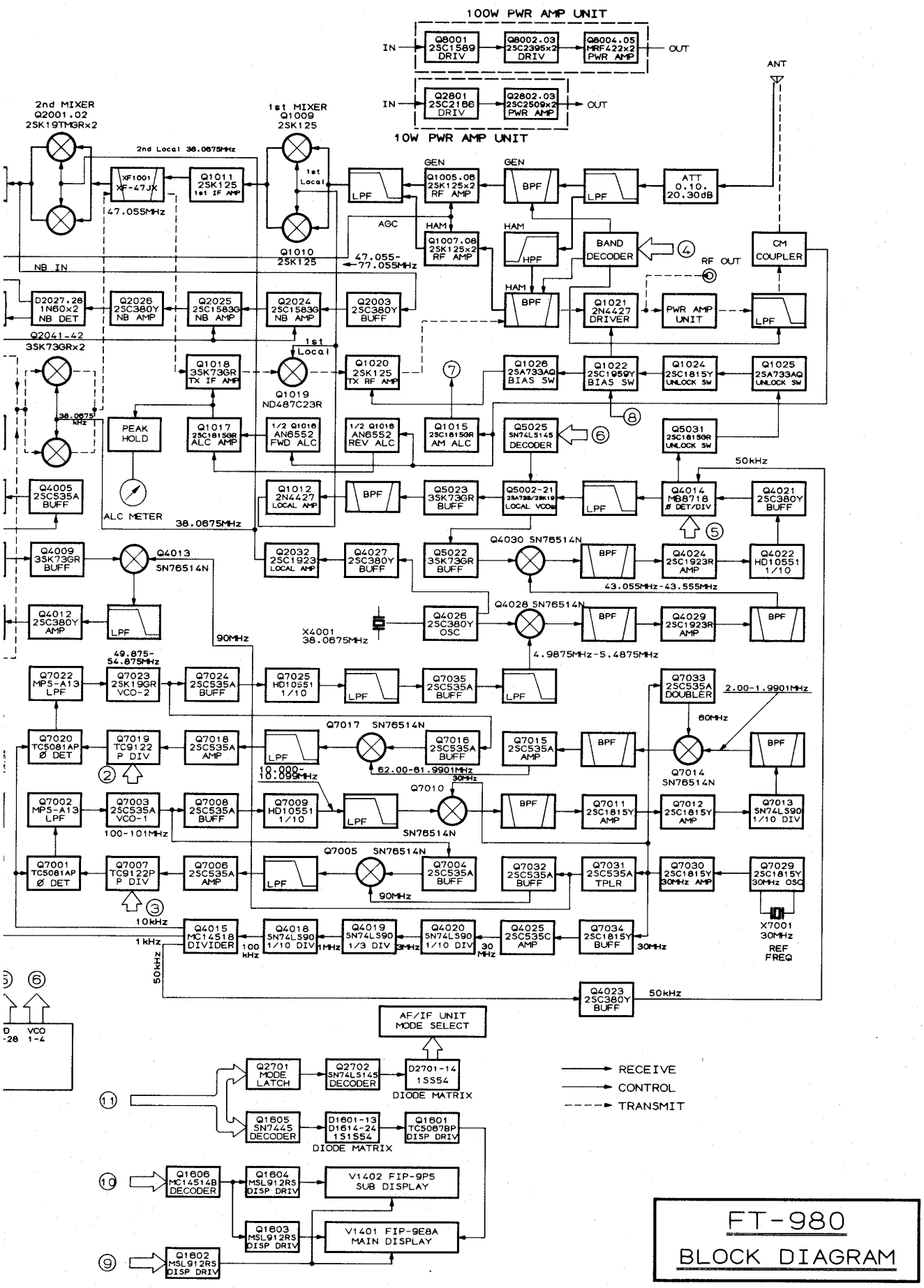

for free by
RadioAmateur.eu

Downloaded from www.Manualslib.com manuals search engine

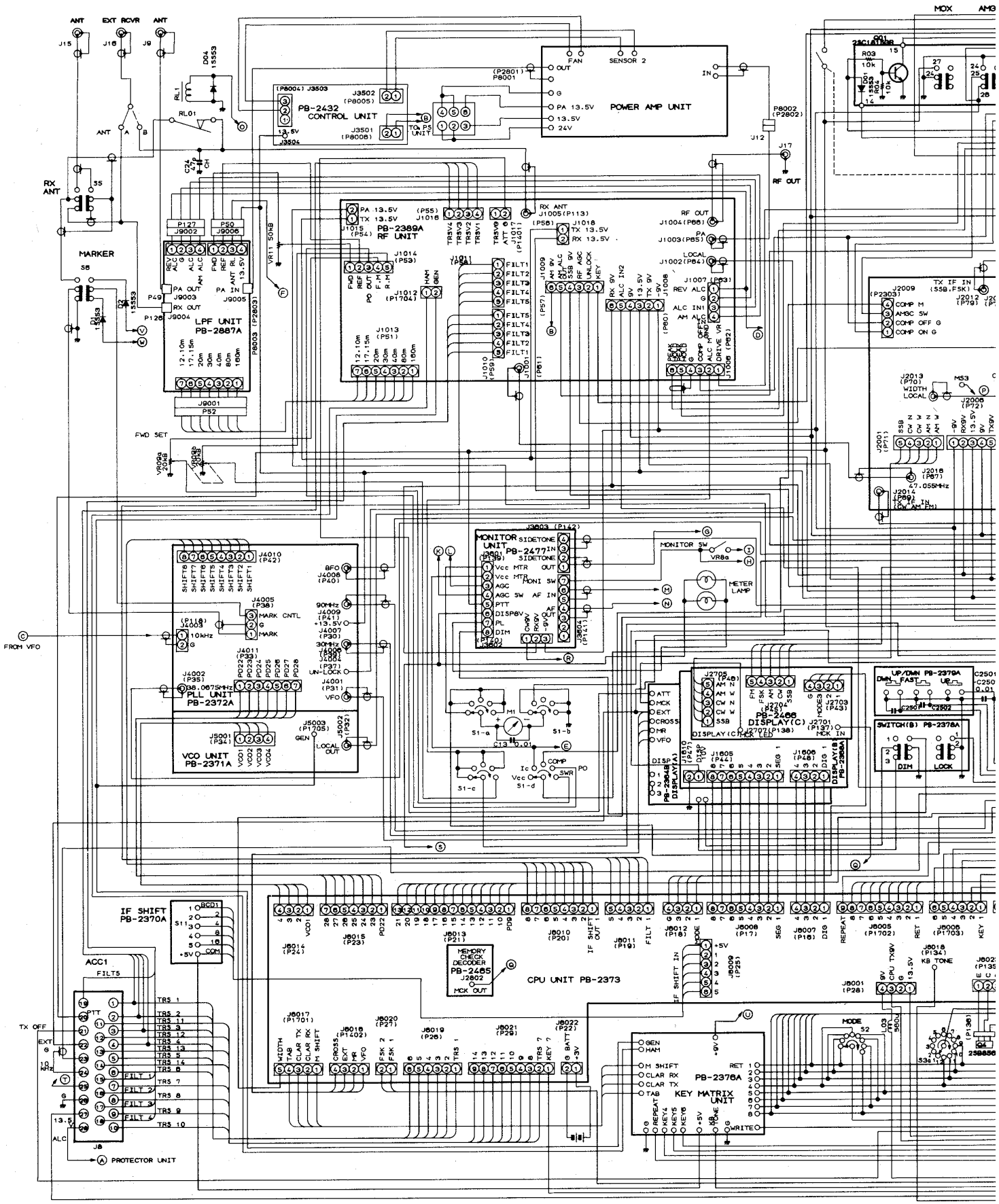

Downloaded from www.Manualslib.com manuals search engine

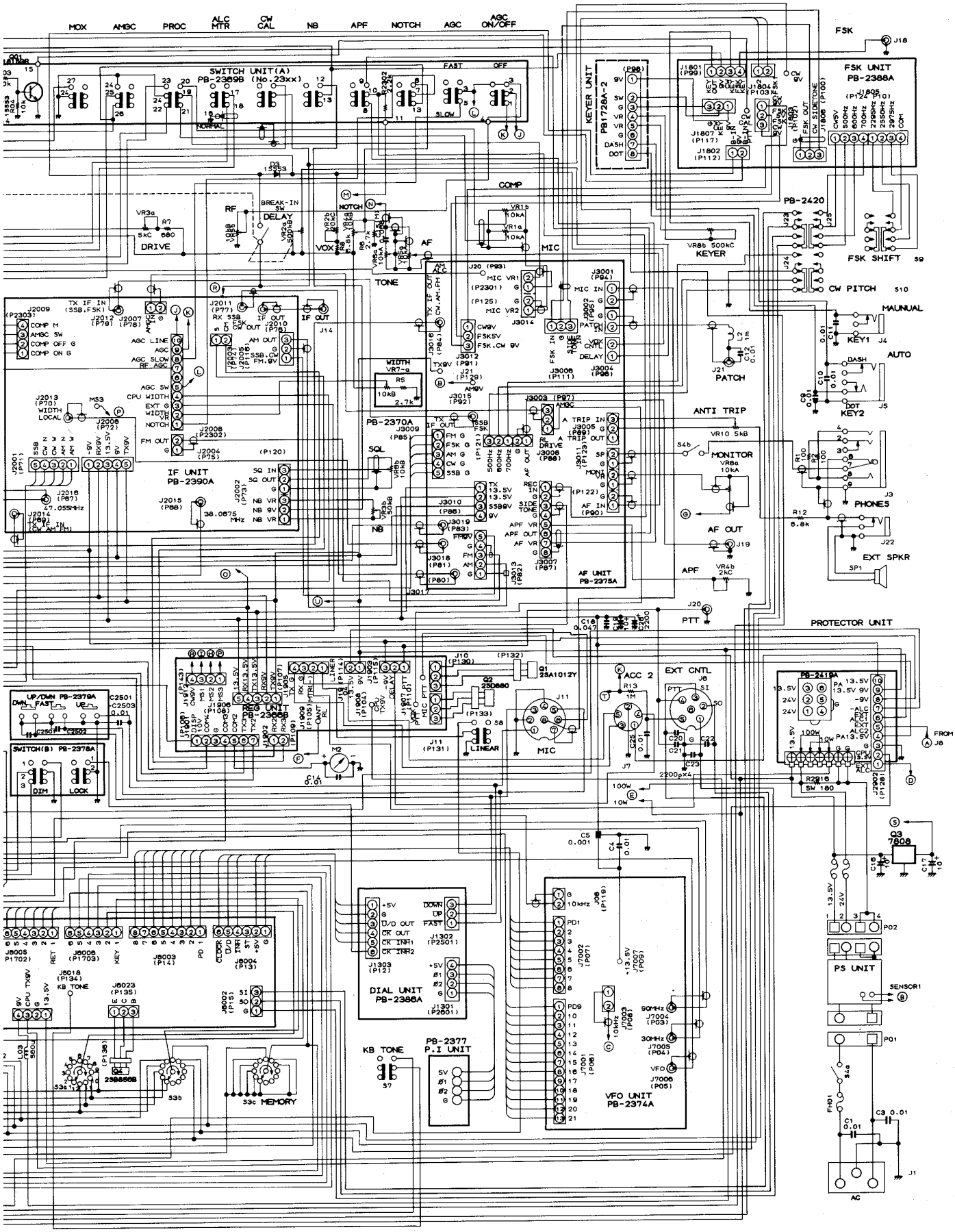

for free by
RadioAmateur.eu

Downloaded from www.Manualslib.com manuals search engine

CAUTION

When a linear amplifier is used with the FT-980, check the current required to control the T/R relay in the linear amplfier. If less than 200 mA, the T/R control line can be directly connected to TX GND and GND on ACC-2 jack. However, also be sure that a BACK PULSE cancelling diode is installed across the T/R relay in your linear amplifier. If this diode is not present, install a general purpose rectifier diode as shown in Figure 1.

When the required T/R relay control is higher than 200 mA, the T/R control line from the linear amplifier must not be connected directly to the ACC-2 jack, but an extra relay box must be used to avoid damage to the T/R relay in the FT-980. Refer to Figure 2, and make the relay box for the interconnection. This relay box is not available from Yaesu.

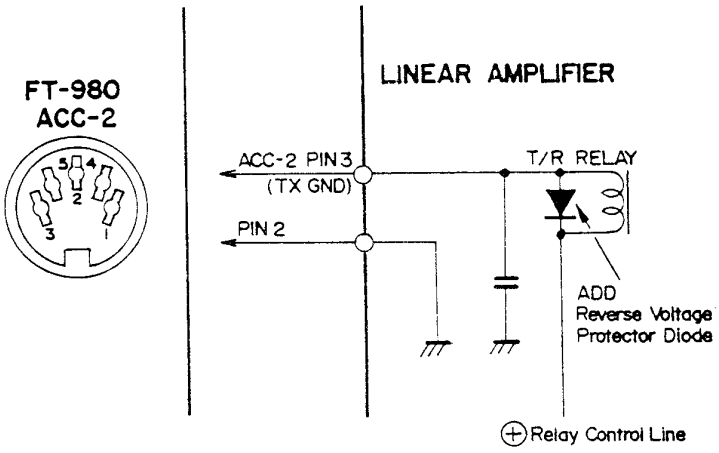

Figure 1

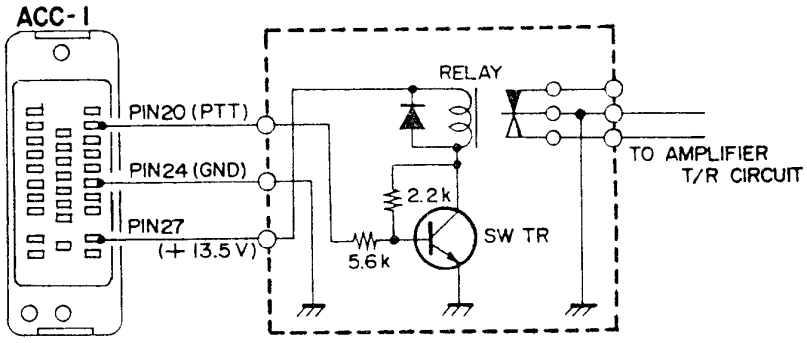

Figure 2

for free by
RadioAmateur.eu

Downloaded from www.Manualslib.com manuals search engine



E3790183(8301-R)

for free by
RadioAmateur.eu

Downloaded from www.Manualslib.com manuals search engine