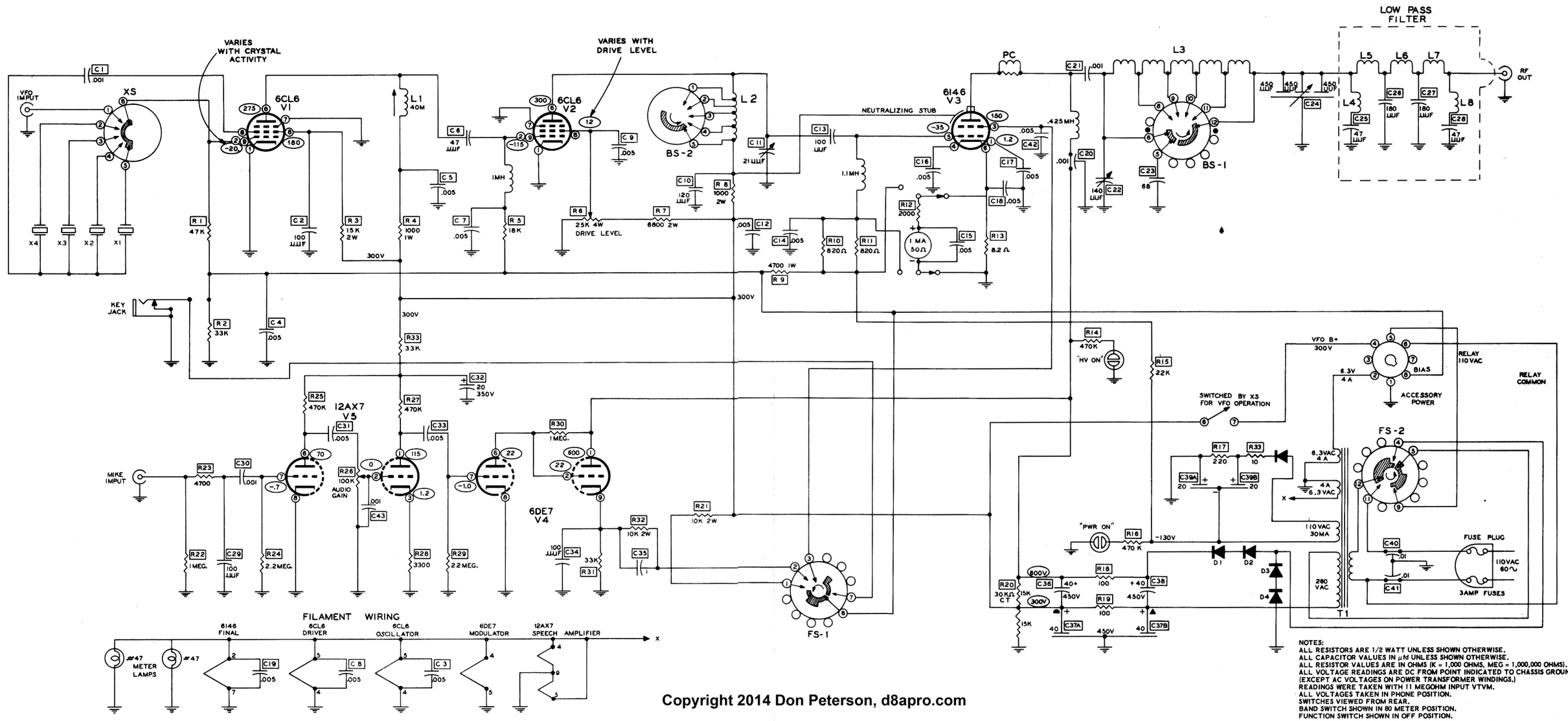

NOTES:
ALL RESISTORS ARE 1/2 WATT UNLESS SHOWN OTHERWISE.
ALL CAPACITOR VALUES IN µfd UNLESS SHOWN OTHERWISE.
ALL RESISTOR VALUES ARE IN OHMS (K = 1,000 OHMS, MEG = 1,000,000 OHMS).
ALL VOLTAGE READINGS ARE DC FROM POINT INDICATED TO CHASSIS GROUND. (EXCEPT AC VOLTAGES ON POWER TRANSFORMER WINDINGS.)
READINGS WERE TAKEN WITH 11 MEGOHM INPUT VTVM.
ALL VOLTAGES TAKEN IN PHONE POSITION.
SWITCHES VIEWED FROM REAR.
BAND SWITCH SHOWN IN 80 METER POSITION.
FUNCTION SWITCH SHOWN IN OFF POSITION.

Copyright 2014 Don Peterson, d8apro.com

HEATHKIT by DAYSTROM

595-365
4-21-61

AMATEUR TRANSMITTER

MODEL DX-60