D

OPERATION AND MAINTENANCE

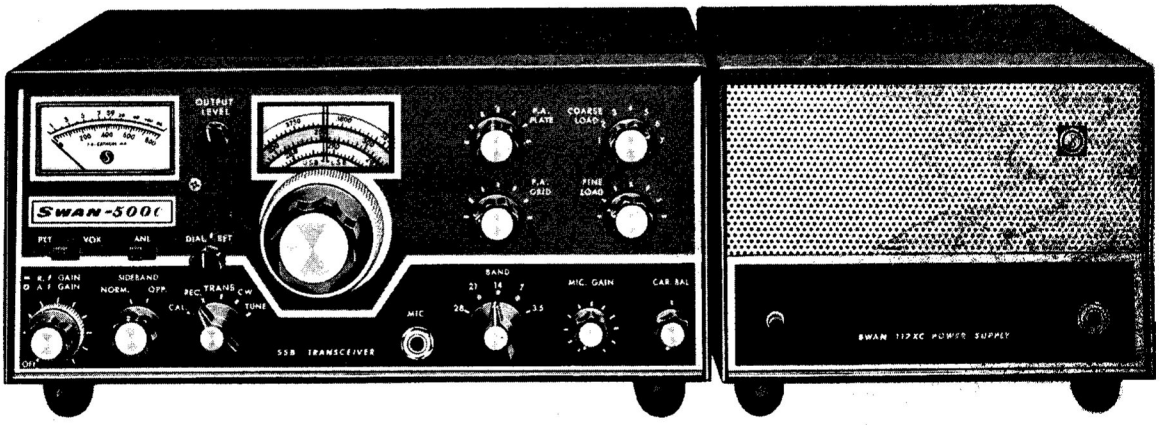

SWAN MODEL 500C

SWAN
ELECTRONICS
Oceanside, California
A Subsidiary of Cubic Corporation

E169

OPERATION AND MAINTENANCE
SWAN MODEL 500C
Single Sideband Transceiver

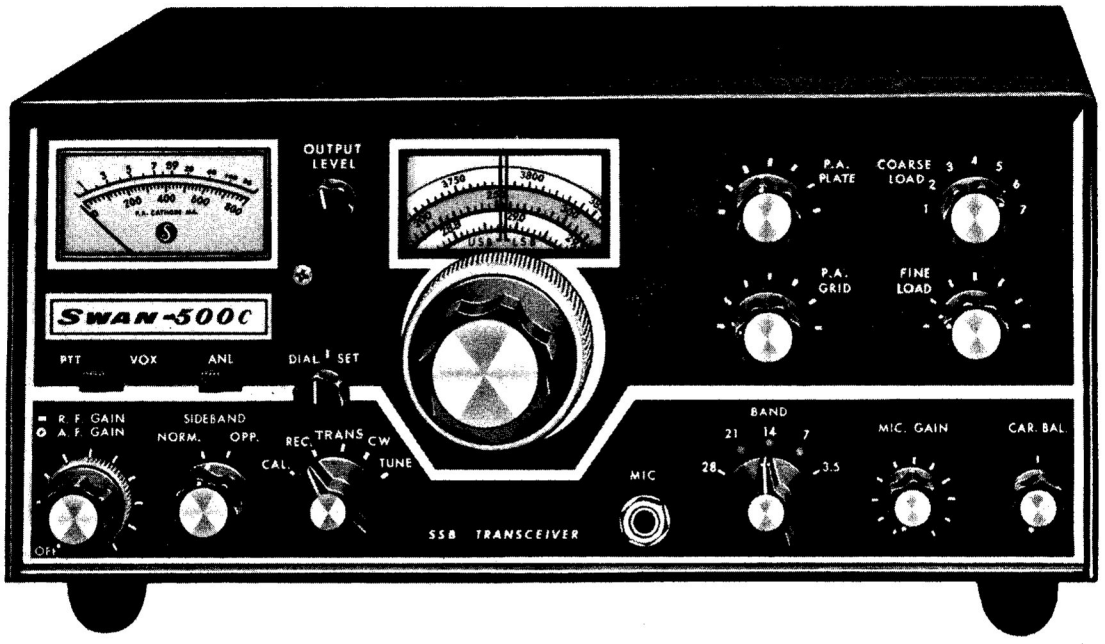

INTRODUCTION

The Swan Model 500C Single Sideband Transceiver together with its accessories and optional equipment, is designed to be used in either CW or SSB modes on all portions of the 80-, 40-, 20-, 15-, and 10 meter amateur radio bands. MARS frequencies may also be covered by using the Model 510X oscillator accessory.

The model 500C generates a single sideband signal by means of crystal lattice filter, and the transceive operation automatically tunes the transmitter to the received frequency. Provisions are included in the transceiver for operation on either upper or lower sideband.

Basic circuitry of the single conversion design has been proven in several thousand of the popular Swan transceivers. Mechanical, electrical, and thermal stability is exceptionally high. All oscillators are temperature compensated and voltage regulated. Push-to-talk operation is standard, with provision for plugging in the Model VX-2 accessory Vox unit for automatic voice control and CW break-in.

The basic transceiver provides coverage of all portions of the 80 through 10-meter amateur bands. In addition to this, the amplifier circuits will tune to most MARS frequencies near the 80-, 40-, and 20-meter bands. By using the Model 510X crystal oscillator accessory, MARS operation is thus possible.

With a suitable power supply, operation may be fixed, portable, or mobile. Power input on all bands exceeds 520 watts, PEP, on single sideband, 360 watts on CW, and 125 watts on AM. The model 500C includes automatic gain control, (AGC), automatic level control, (ALC), automatic noise limiter (ANL), and grid block keying with CW monitor and provisions for break-in CW.

Part I of the instruction manual covers the basic transceiver. Part II covers the recommended power supplies, Model 117-XC for ac operation and Model 14-117 for 12-volt dc operation. Part III provides information on various accessories.

CONTENTS:

A. CIRCUIT THEORY	Page 3	PARTS LIST	Page 17
B. INSTALLATION	6	ACCESSORIES	19
C. OPERATION	9	POWER SUPPLIES	25
D. ALIGNMENT AND TROUBLE SHOOTING	12	SCHEMATIC	31

SPECIFICATIONS:

FREQUENCY RANGES

80 Meters	3.5 to 4 mc.
40 Meters	7.0 to 7.450 mc.
20 Meters	14.0 to 14.450 mc.
15 Meters	21.0 to 21.450 mc.
10 Meters	28.0 to 29.7 mc.

POWER INPUT

Single Sideband, Suppressed Carrier:
520 watts, PEP, minimum on all bands.
CW: 360 watts, dc input on all bands.
AM (Single Sideband with Carrier):
125 watts dc input on all bands.

DISTORTION

Distortion products down approx. 30 db.

UNWANTED SIDEBAND SUPPRESSION

Unwanted sideband down more than 50 db.

CARRIER SUPPRESSION

Carrier suppression greater than 60 db.

RECEIVER SENSITIVITY

Less than 0.5 microvolt at 50 ohms impedance for signal-plus-noise to noise ratio of 10 db.

AUDIO OUTPUT AND RESPONSE

Audio output, 4 watts to 3.2 ohm load. Response essentially flat from 300 to 3000 cps in both receive and transmit.

TRANSMITTER OUTPUT

Wide-range Pi-network output matches antennas essentially resistive from 15 to 500 ohms impedance, with coarse and fine load adjustment.

METERING

Power amplifier cathode current 0-800 ma on transmit, S-Meter 0-70 db over S9 on receive, relative output in Tune mode.

FRONT PANEL CONTROLS

AF-RF Gain, Sideband Selector CAL-REC-TRANS-CW-TUNE, Mic. Gain, Bandswitch, Carrier Balance, PA Plate Tune, PA Grid Tune, PA Load Course, PA Load Fine, VOX-PTT Switch, ANL Switch, Dial set, Output Level.

REAR PANEL CONTROLS AND CONNECTIONS

Bias potentiometer, CW key jack, Jones plug power connector, Vox connector, Antenna jack, S-Meter zero, Auxilliary relay switching, Outboard VFO connector.

VACUUM TUBE COMPLEMENT

V1	6EW6 VFO Amplifier
V2	12BE6 Transmitter Mixer
V3	6GK6 Driver
V4	6LQ6 Power Amplifier
V5	6LQ6 Power Amplifier
V6	12BZ6 Receiver RF Amplifier
V7	12BE6 Receiver Mixer
V8	6EW6 First IF Amplifier
V9	12BA6 Second IF Amplifier
V10	12AX7 Product Detector/Receive Audio
V11	6BN8 AGC Amplifier/Rectifier
V12	6GK6 Audio Amplifier
V13	6JH8 Balanced Modulator
V15	12AX7 Mic. Amplifier/Transmit Audio
V17	12BA6 100KC Calibrator

DIODE AND TRANSISTOR COMPLEMENT

Q1	2N706 Oscillator
Q2	2N706 Emitter Follower
Q14	Carrier Oscillator
D401	ALC Diode
D402	ALC Diode
D403	1N 34A Relative Output Diode
D1001	ANL Diode
D1002	ANL Diode
D1201	CW Switching Diode
D1202	CW Switching Diode
D1601	1N2974A Zener voltage regulator
D1602	Relay Silencing Diode
D1603	AGC Charging bypass

POWER REQUIREMENTS

Filaments	12.6 volts, 5.5 amps, ac or dc
Relay	12 volts dc, 250 ma.
Bias	-110 volts dc, 100 ma.
Med. voltage	275 volts dc, 150 ma.
High voltage	800 volts dc, 550 ma. Peak Trans.

DIMENSIONS AND WEIGHT

Height	5-1/2 in.	Depth	11 in.
Width	13 in.	Weight	17-1/4 lb.

A. CIRCUIT THEORY

GENERAL DISCUSSION

The Swan 500C transceiver provides single sideband, suppressed carrier transceive operation, and generates the single sideband signal by means of a crystal lattice filter. To permit a logical discussion of this mode of operation, certain definitions are necessary. In a normal AM signal, (double sideband with carrier), a radio frequency signal is modulated with an audio frequency signal. This is considered by many to be merely a case of varying the amplitude of the carrier at an audio rate. In fact, however, there are actually sideband frequencies generated, which are the results of mixing the RF and the AF signals. These sidebands are the sum of, and the difference between the two heterodyned signals. In the detection of this conventional AM signal, the two sidebands are mixed with the carrier to recover and reproduce the audio intelligence. This is an inefficient means of transmission, because only 25 percent of the transmitted power is used to transmit intelligence. There are other attendant drawbacks, also. The bandwidth of AM voice transmission is approximately 6 kc, while the actual demodulated audio is only approximately 3 kc. The result is inefficient use of the frequency band, and over half of the allotted band is unusable due to heterodynes, interference, and congestion.

In the single sideband, suppressed carrier mode of transmission, only one of the sideband signals is transmitted. The other sideband and the carrier are suppressed to negligible level. In addition to increasing the transmission efficiency by a factor of four, single sideband effectively doubles the number of stations or channels which can be used in a given band of frequencies.

It should be remembered that in the single sideband, suppressed carrier mode of transmitting, the unwanted sideband and carrier are only suppressed, not entirely eliminated. Thus, with a transmitted signal from a transmitter with 50 db sideband suppression, the other or unwanted sideband will be present, and will be transmitted, but its level will be 50 db below the wanted sideband. When this signal is received at a level of 20 db over S9, the unwanted sideband will be pesent at a level of approximately S5. The same is true of carrier suppression. With carrier suppression of 60 db, and a signal level of 20 db over S9, carrier will be present at a level of approximately S3 to S4.

In the Model 500C transceiver, the single sideband suppressed carrier signal is generated by the crystal lattice filter method. For details, refer to the schematic diagram, and to Figures 1, 2, and 3.

SIGNAL GENERATION

When the push-to-talk switch on the microphone is pressed, the transmitter portion of the transceiver is activated, and it generates a single sideband, suppressed carrier signal in the following manner. Carrier is generated by V14 Carrier Oscillator, which is a Pierce oscillator with the crystal operating in parallel resonance. This stage operates in both the transmit and receive modes. When transmitting, the RFoutput of the oscillator is injected into the control grid of the Balanced Modulator, V13. This balanced modulator is a beam deflection tube, and operates similar to a cathode ray tube in that the electron beam from the cathode is deflected to one output plate or the other by the charge appearing on the deflection plates. The carrier signal fed to the control grid of the balanced modulator appears on both plates of the output. The two plates are connected to Transformer Z1301 in push-pull, so the carrier signal cancels itself out in Z1301. The deflection plate DC voltages are adjusted by means of the carrier balance control so that the RF being fed to the output plates will cancel out, and the output from Z1301 will be zero. Audio signals from the Microphone Amplifier, V15, are applied as a modulating voltage to one deflection plate, and the two sidebands resulting from the sum and difference frequencies of the audio and carrier signals appear in the output of transformer Z1301. Carrier suppression is approximately 60 db.

The double sideband, suppressed carrier signal is then coupled from the secondary winding of Z1301 to the crystal filter, which suppresses the lower sideband, and permits only the upper sideband to be fed to the First IF Amplifier, V8. The carrier frequency is generated at approximately 5500.0 kc, normal sideband. With the opposite sideband crystal, the carrier crystal frequency will be 5503.3 kc, and this positions the double sideband signal on the other side of the filter response curve, attenuating the upper sideband by at least 50 db. In the single conversion mixing process, these sidebands become inverted on 80 and 40 meters. Thus the Swan-500C normally operates on lower sideband on 80 and 40, while on 20, 15, and 10 meters normal operation is on upper sideband.

Q1, the VFO 2N706 Oscillator, operates in the common base configuration as a Colpitts oscillator. Q2, the Emitter Follower is used for isolation. The extremely good regulation achieved through using the Zener diode regulator D1601 across the bias supply voltage, also contributes to the stability. Bandswitching is accomplished by changing the tank circuit coil. The VFO in the Model 500C exhibits extremely good stability after the initial warm-up period. Drift from a cold start will be less than 1 kc for the first hour on 80, 40-, and 20-meter bands, and less than 2 kc on 10 and 15 meters. After the initial warm-up period, drift will be negligible.

The single sideband, suppressed carrier signal from the first IF Amplifier is fed to the Transmitter.

A. Circuit Theory (Cont)

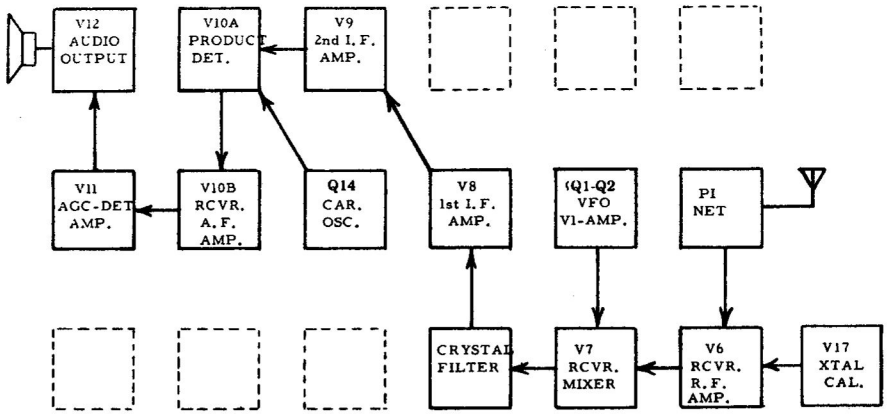

FIGURE 1 BLOCK DIAGRAM, RECEIVE MODE

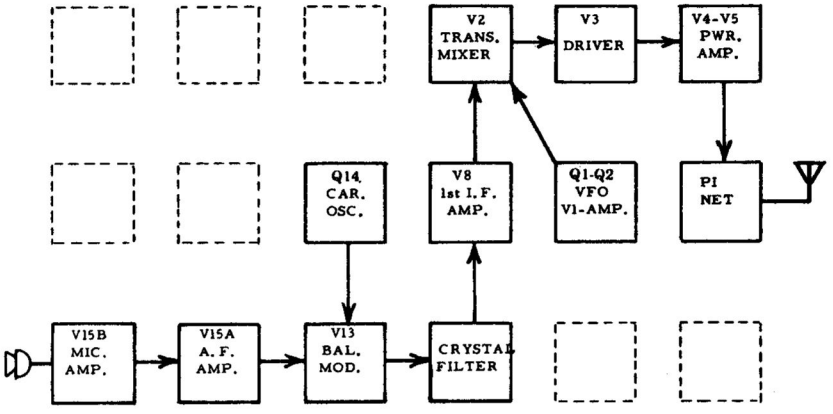

FIGURE 2 BLOCK DIAGRAM, TRANSMIT MODE

SIGNAL GENERATION (cont)

Mixer, V2, where it is heterodyned with the VFO signal. The resultant signal at the desired transmit frequency is amplified by the Driver, V3, and the Power Amplifiers, V4 and V5. The signal from the VFO Amplifier is initiated in the transistorized VFO-Emitter Follower circuit Q1 and Q2. The signal from the VFO is routed to the VFO Amplifier, and on 40 and 80 meters, is subtractively mixed with the single sideband signal from the IF Amplifier, and result in LSB operation. On 20, 15, and 10 meters, the frequencies are additively mixed, resulting in output on the upper sideband.

When in TRANSMIT, the gain of the First IF Amplifier is controlled through the Automatic Level Control network D401-D402, etc., to control the gain of the stage in response to the average input power to the Power Amplifiers. This ALC system will compensate for any extremely strong input signals, but does not completely eliminate the necessity of proper adjustment of the Mic. Gain Control. This feature will help prevent the transmitter from flat topping and spurious emissions, but considerable distortion may occur if the Mic. Gain Control is not properly adjusted. Refer to Operating Instructions.

TUNE AND CW OPERATION

(See page 9 for Tuning Instructions)

Normally, the frequency of the carrier oscillator is approximately 300 cps outside the 6 db passband of the crystal lattice filter. In TUNE position, the frequency of the carrier oscillator is moved approximately 800 cps to place it well within the passband of the crystal lattice filter. A similar procedure is followed for CW to allow full carrier output during CW operation. During CW operation, the cathode of V15A is disconnected from ground. This allows CW operation with no accidental audio modulation from the microphone.

RECEIVE

In RECEIVE position, or at any time when the transmitter is not in TRANSMIT, all circuits used in transmitting are disabled through the relay controlled circuits, K1, K2. The relays are energized for transmitting and de-energized for receiving. Relay K2, when de-energized, allows signals from the transmitting tank circuit and antenna to be fed to the Receiver RF Amplifier, V6, where they are amplified and then fed to the control grid of the Receiver Mixer, V7. The local oscillator signal from the VFO Amplifier is now used to heterodyne the received signal to the IF frequency. All IF amplification is accomplished at this frequency, nominally 5500.0 kc, through V8 and V9 IF amplifiers. In the Product Detector V10A, the IF signal is heterodyned with the carrier frequency generated by Carrier Oscillator, V14. The resultant audio signal is then put thru a noise clipper network

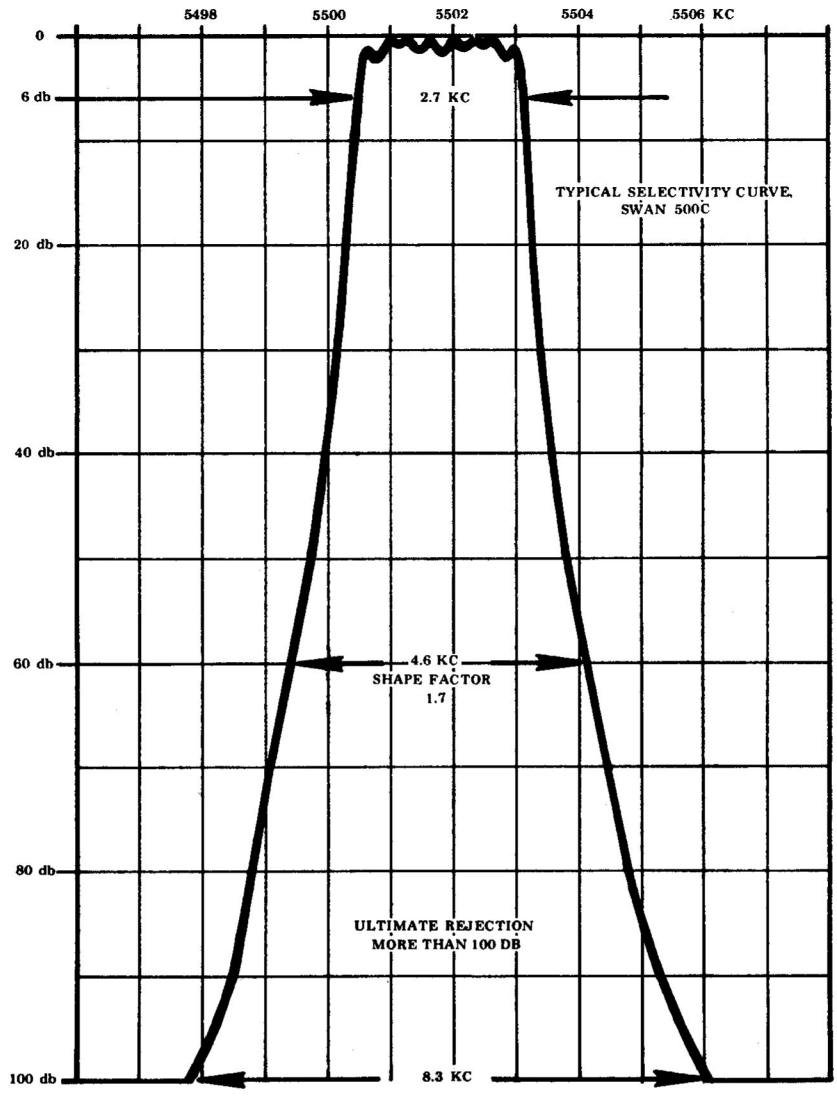

FIGURE 3 CRYSTAL FILTER, TYPICAL CHARACTERISTIC

which is in or out of circuit by selection of ANL switch. The signal is then amplified by V10B, which then couples to V11, the AGC amplifier, and V12, the output audio stage.

FREQUENCY CALIBRATION

Frequency calibration of the Model 500C is in 5 kc increments on 80-, 40-, 20-, and 15- meters, and is 20 kc increments on 10 Meters. 80 meters is calibrated directly on the upper dial scale. 40-, 20-, and 15-meters are calibrated from zero to 450 on the green tinted center scale. "EXAMPLE": The dial is set at 200 on the green scale. (On 40 meters this would read 7.2 mc; on 20 meters this would read 14.2 mc, and on 15 meters this would read 21.2 mc.) 10 meters is calibrated directly on the lower dial scale.

Dial accuracy and tracking are very good on the 500C, but caution must always be observed when operating near band edges. Measuring the frequency with the 100 kc calibrator when working near band edges is recommended.

DIAL SET

A dial-set has been provided so that dial adjustment can be made at any 100 kc point of the dial. With calibrator on, set the dial to any 100 kc point closest to the frequency you wish to work. Now adjust dial-set control to zero-beat the VFO with the 100 kc Calibrator. This provides greater accuracy of dial readout.

CAUTION: Care must be exercised when tuning for the 100 kc harmonics of the calibrator. Several spurious image signals may be heard, although they will be somewhat weaker than the actual harmonics.

TRANSMIT AND RECEIVE SWITCHING

Transmit and receive switching is performed by relays K1 and K2. In TRANSMIT position, only those tubes that operate in the transmit mode are operative, all others being biased to cutoff through the relay contacts. In the RECEIVE position, with the relays de-energized, the tubes that are used only in transmit are cut off in the same manner. Relay K2 when de-energized, feeds signals from the output pi-network to the receiver, and is used also to control external switching circuits. In transmit position

A. Circuit Theory (Cont)

the meter indicates the combined cathode current of the two power amplifiers. In receive position, it indicates the voltage across R903 in the screen grid of the Second IF Amplifier, V9, which is inversely proportional to the AGC voltage used to control the gain of the tube. Thus, the meter indicates the relative strength of received signals.

POWER RATING

The Swan 500C is capable of 400 watts, PEP input under steady state two-tone test conditions, when operated with any of the recommended power supplies. The peak envelope power, when voice modulated, is considerably greater, typically 550 watts, or more.

Recommended power supplies produce a no-load plate voltage of approximately 925 volts. Under TUNE conditions, or CW operation, this voltage will drop to approximately 720 volts. Under steady state two-tone modulation, the voltage will drop to approximately 750 volts. If the power amplifier idling current is 50 ma, and the two-tone current, just before flat-topping, is 400 ma, the peak two-tone current will be 600 ma. Under these conditions the PEP input will be 750 volts times 600 ma = 450 watts. Under voice modulation, because average power is considerably less, the power amplifier plate and screen voltages will be maintained higher, even during voice peaks, by the power supply filter capacitors. Peak plate current will therefore also be higher than with two-tone test conditions. Under typical operating conditions, peak plate current before flat-topping will be 675 ma at 800 volts, to result in an input of 540 watts, PEP. Readings of cathode current will not reflect this 540 watt power input, however, because of the damping in the cathode current meter. Cathode current readings under normal voice input should not exceed approximately 165 to 200 ma.

POWER AMPLIFIER PLATE DISSIPATION

There is often a misunderstanding about the plate dissipation of tubes operated as AB1 amplifiers under voice modulation. In the Swan 500C, while in the transmit position, and with no modulation, the plate voltage will be 890 volts, the plate current 50 ma, and the power input will be 45 watts.

Authorities agree that the average voice power is 10 to 20 db below peak voice power. Normally some peak clipping in the power amplifier can be tolerated, and a peak-to-average ratio of only 6 db may sometimes occur. Under such conitions, the average power input will be 125 watts, and average plate current will be 156 ma. With power amplifier efficiency of 65 percent, plate dissipation will be 44 watts, or 22 watts per tube. The 6LQ6 is rated at 30 watts, continuous duty cycle, in normal TV service. Thus it can be seen that under normal operating conditions, the power amplifier tubes in the Swan 500C are not being driven very hard. Note, however, that proper modulation level must be maintained by correct setting of Mic. Gain, and that the length of time in TUNE position must be limited to not more than 30 sec. at a time.

B. INSTALLATION

GENERAL

The Swan 500C transceiver has been designed to provide the utmost in ease of operation, stability, versatility, and enjoyment. Maximum enjoyment from your Swan will depend to a great extent on the installation. For fixed station or portable use, operation with the Model 117-XC power supply provides a compact arrangement with maximum ease of operation. All switching is performed in the transceiver. For mobile installations, the Model 14-117 supply provides similar switching arrangements, and speaker output may be fed to an optional 3 x 5 speaker with mounting provisions on the inside of 500C cabinet. Alternately, the speaker output may be fed through the car broadcast radio speaker.

POWER SUPPLY

The Swan Models 117-XC or 230-XC Power Supplies provide all necessary voltages required by the transceiver for AC operation. The supplies come equipped with a pre-wired plug and cable, all ready for plugging into the transceiver. The Model 14-117 supply for mobile operation includes all necessary cables, connector plug, fuses, and installation hardware. The Jones plug for connection to the transceiver is furnished with the unit.

Power requirements for the Swan 500C are listed in the following table. Pin connections to the Jones type power connector are listed as an aid in connecting other brands or home-brew supplies.

EXTERNAL SWITCHING

On the rear of the 500C chassis is a three lug terminal connection for external switching. These connections are marked "R" (receive), "C" (common), and "T" (transmit). When in the receive position the "R" and "C" terminals are connected and in transit the "T" and "C" terminals are connected. These connections are made through relay K2 and are used for switching an antenna relay, a final amplifier, etc.

EXTERNAL SPEAKER CONNECTIONS

Audio output from the transceiver is provided at pin 12 of the Jones plug, and to a terminal lug located near V12 audio output tube on top of chassis for optional "3 x 5" internal speaker. The other speaker lead goes to the common chassis ground at pin 6 of Jones plug or to ground terminal at the terminal strip. For mobile installations, mounting a "3 x 5" internal speaker makes the installation simple. In case you wish to use the car broadcast radio speaker a DPDT selector switch should be installed to select either the broadcast radio or transceiver output. (See page 26.)

Provisions for headphones will be found on front of AC Power Supply. (See Page 27) It is recommended that high impedance phones be used for best results.

JONES PLUG CONNECTIONS

	Pin	Nominal	Minimum	Maximum
High Voltage	8	800 VDC 550 MA	600 VDC Low Pwr.	1200 VDC Hi. Power
Medium Voltage	10	275 VDC 150 MA	225 VDC	325 VDC
Bias Voltage	3	-110 VDC 100 MA	-100 VDC	-130 VDC
Filament Voltage	4	12.6 V* 5.5 amp	11.5 V	14.5 V
Relay Voltage	5	12 VDC 250 MA	10 VDC	14.5 VDC
*AC or DC				

MICROPHONE

The microphone input is designed for high impedance microphones only. The choice of microphone is important for good speech quality, and should be given serious consideration. The crystal lattice filter in the transceiver provides all the restriction necessary on audio response, and further restriction in the microphone is not required. It is more important to have a microphone with a smooth, flat response throughout the speech range. The microphone plug must be a standard 1/4 in. diameter three-contact type. The tip connection is for push-to-talk relay control, the ring connector is the microphone terminal, and the sleeve is the common chassis ground. The microphone manufacturer's instructions should be followed in connecting the microphone cable to the plug. With many microphones, the push-to-talk button must be pressed to make the microphone operative. For VOX operation, this feature may be disabled, if desired, by opening the microphone case and permanently connecting the contacts which control the microphone.

ANTENNA

Any of the common antenna systems designed for use on the high frequency amateur bands may be used with the Swan transceiver, provided the input impedance of the transmission line is not outside the capability of the pi-output matching network. The transmission line should be of the coaxial cable type. An antenna system which shows a standing wave ratio of less than 4:1 when using 50 or 75 ohm coaxial transmission line, or a system that results in a transmission line input impedance that is essentially resistive, and between 15 and 500 ohms will take power from the transceiver with little difficulty. If open-wire or balanced type transmission line is used with the antenna, a suitable antenna tuner is recommended between the transreceiver and the feedline. Methods of constructing and operating such tuners are described in detail in the ARRL Antenna Handbook, and similar publications. For operation on the 75- and 40- meter bands, a simple dipole antenna, cut to resonate in the most used portion of the band, will perform satisfactorily. For operation on the 10, 15, and 20 meter bands, the efficiency of the station will be greatly increased if a good directional rotary antenna is used. Remember that even the most powerful transmitter is useless without a proper and efficient antenna system.

MOBILE ANTENNA

Mobile antenna installations are critical, since any mobile antenna for use on the high frequency bands represents a number of compromises. Many amateurs lose the efficiency of their antenna through improper tuning. Points to remember about the mobile antenna used with the Swan 500C are:

1. The "Q" of the antenna loading coil should be as high as possible. There are several commercial models available which use high "Q" coils, including the Swan Model 45 and Model 55.5 band "Swantennas".
2. The loading coil must be capable of handling the power of the Model 500C without over heating. In TUNE position, the power output of the transceiver may exceed 250 watts. Wide spaced, heavy wire loading coils are essential.
3. The SWR bridge is a useful instrument, but unfortunately it is quite often misunderstood, and over rated in importance. Basically, the SWR bridge will indicate how closely the antenna load impedance matches the transmission line. With long transmission lines, such as will be used in many fixed station installations, it is desirable to keep the impedance match fairly close in order to limit power loss. This is particularly true at the higher frequencies. The longer the line, and the higher the frequency, the more important SWR becomes. However, in mobile installations the transmission line seldom exceeds 20 feet in length, and an SWR of even 4 to 1 adds very little to power loss. The only time SWR will indicate a low figure is when the antenna presents a load close to 50 ohms, but many mobile antennas will have a base impedance as low as 15 or 20 ohms at their resonant frequency. In such a case, SWR will indicate 3 or 4 to 1, and yet the system will be radiating efficiently.
4. The really important factor in your mobile antenna is that it should be carefully tuned to resonance at the desired frequency. The fallacy in using an SWR bridge lies in the fact that it is sometimes possible to reduce the SWR reading by detuning the antenna. Field strength may actually be reduced in an effort to bring SWR down. Since field strength is the primary goal, we recommend a Field Strength Meter for antenna tuning.

5. For antenna adjustments, the Swan-500C may be loaded lightly to about 100 ma. cathode current instead of the usual 500 ma. This will limit tube dissipation during adjustments, and will also help reduce interference on the frequency. In any case, do not leave the transmitter on for very long at one time. Turn it on just long enough to tune and load, and get a field strength reading.

   Start out with the antenna whip at about the center of its adjustment range. Set the VFO to the desired operating frequency and then adjust P. A. TUNE for dip, and P. A. LOAD for 100 ma. Then observe the field strength reading. The Field Strength Meter may be set on top of the dash, on the hood, or at an elevated location some distance from the car.

   Change the whip length a half inch, or so, at a time, retune the P.A. for 100 ma. loading each time, and check field strength. Continue this procedure until the point of maximum field strength is found. This adjustment will be most critical on 75 meters, somewhat less critical on 40, etc., until on 10 meters the adjustment will be quite broad. After tuning the antenna to resonance, load the P. A. to full power.

CONTROL FUNCTIONS

ON-OFF SWITCH (On AF & RF Gain Knob)	Turns power supply on and off
CAL-REC-TRANS-CW-TUNE	
Calibrate	All voltages are applied to transceiver. Grounds cathode of V17. Removes ground from cathode of V15A.
Receive	All voltages are applied to transceiver.
Transmit	12 volt dc circuit through relay K1 and K2 is completed, and tubes used only in receive are biased to cutoff.
CW	All circuits for transmit are energized, as above. Capacitator C1401 in the carrier oscillator is removed from ground. Carrier must be inserted with CAR. BAL. control.
TUNE	Same as CW except that carrier is fully inserted, and meter reads relative output.
MIC. GAIN	Contols potentiometer R1503 in the grid of V15A and controls amount of audio to the balanced modulator.
CAR. BALANCE	Controls potentiometer R1305 in the balanced modulator deflection plate circuit, and permits nulling out the carrier.
RF GAIN	Controls variable resistor R-1612, common in the grids of receiver mixer V7, RF Amplifier, V8 and V9 IF Amplifiers.
AF GAIN	Controls potentiometer R1201 in grid circuit of V12 AF Output, and controls audio volume.
MAIN TUNING	Controls C1706 in frequency determining tank circuit of VFO.
PA GRID	Controls CIA and CIB in plate tanks of transmitter mixer and driver.
PA TUNE	Controls C417 on pi-network to tune final power amplifier plate to resonance.
PA LOAD, Fine	Controls C420 in pi-network to match impedance of output load. Tunes input to Receiver RF Amplifier.
PA LOAD, Coarse	Switches in progressively more capacitance in parallel with PA Load, Fine.
MAIN BANDSWITCH	Switches, plate coils, and associated capacitors of VFO, VFO Amplifier, V1, Transmitter Mixer, V2, and Driver, V3. Also switches tank coil of pi-coupling system and associated capacitors in PA output tank.
OUTPUT LEVEL	Adjusts meter reading when in TUNE mode.
SIDEBAND SELECTOR	Selects upper or lower sideband.

C. OPERATION

Before connecting any cables to the Swan 500C perform the following steps:

1. Rotate the PA BIAS control on the rear chassis apron, fully counter clockwise.
2. Rotate the CAL-REC-TUNE-CW on the lower left of the front panel counter clockwise to REC.
3. Rotate the AF GAIN Control counter clockwise to operate the power switch to OFF.

POWER SUPPLY, ANTENNA AND GROUND CONNECTIONS

1. Connect wire from earth ground to ground stud provided on rear of chassis.
2. Connect a 50 to 75 ohm antenna feed-line to the coaxial connector on the rear chassis panel.
3. Connect the power supply cable to the Jones connector on the rear chassis apron.
4. Connect the power supply to the proper voltage source.

The Swan Model 500C may be operated from 117 volts, ac, 50 - 60 cycle power with the Model 117-XC power supply, or from 230 volts, 50 - 60 cycles with the Model 230-XC. The Model 500C may be operated from a 12 volt dc source with the Swan Model 14-117 power supply.

WARNING

DANGEROUS HIGH VOLTAGE IS PRESENT ON THE PLATE OF THE POWER AMPLIFIER WHENEVER THE POWER SUPPLY IS ENERGIZED. NEVER TURN POWER ON WHEN THE POWER AMPLIFIER COVER IS REMOVED. HIGH VOLTAGE IS ALSO PRESENT AT PIN EIGHT OF THE POWER PLUG.

RECEIVE OPERATION

1. Rotate the AF GAIN Control clockwise to about the 3 o'clock position. The power switch will operate applying filament, relay, bias, medium, and 800 volt high voltage to the transceiver.
2. Wait approximately one minute to allow the tube filaments to reach operating temperature. During this period, perform the following steps:

   (a) Rotate the BANDSWITCH to desired band.
   (b) Rotate MIC. GAIN fully counter-clockwise.
   (c) Rotate CAR. BAL. control to the mid-scale position, with white dot on knob aligned with the long index mark on the panel.
   (d) Preset PA PLATE control to mid-position.
   (e) Preset PA GRID control to mid-position.
   (f) Preset PA LOAD FINE to mid-position.
   (g) Preset PA LOAD COARSE to position 1.
   (h) Set tuning dial to desired operating frequency.
   (i) Set RF GAIN control to approximately 3 o'clock position.

3. Carefully adjust the PA GRID and the PA PLATE controls for maximum receiver noise. Note: The PA GRID control resonates the transmitter driver stages and the receiver RF amplifier plate circuit. The PA PLATE and PA LOAD controls adjust the input and output capacitors in the transmitter power amplifier final plate circuit, as well as the receiver RF amplifier grid circuit. Proper adjustment of these controls in the receiver position will result in approximately resonant conditions in the transmitter stages.

RECEIVER TUNING—

The tuning dial of the 500C has a green tinted scale reading from zero to 450 which is used on 40, 20, and 15 meters. Above the green scale is a separate calibration for 80 meters, reading from 3500 to 4000 KC. Below the green scale is the 10 meter scale, reading from 28 to 29.7 MC. The dial window retains the familiar Swan double index lines which serve to indicate the passband of the transceiver, that is, the portion of the spectrum to which you are listening and in which you are transmitting. Actual carrier frequency is indicated by the left hand index line for upper sideband, and by the right hand line lower sideband. In other words, when using upper sideband the carrier is the left hand index line and you are transmitting and receiving side band information above this frequency, and up to the right hand line. On lower sideband the opposite takes place.

Precise tuning of a single sideband signal is very important. Do not be satisfied to merely tune until the voice can be understood, but take the extra care of setting the dial to the exact spot where the voice sounds natural. Above all, avoid the habit of tuning so that the voice is pitched higher than normal. This is an unfortunate habit practiced by quite a number of operators. The following points help to explain the effects of mistuning:

1. If you tune so the received voice is higher than normal pitch, you will then transmit off frequency, and your voice will sound lower than normal pitch to the other station. He

will probably retune his dial to make you sound right. If you keep this up, you'll gradually waltz one another across the band. If both of you are mistuning to an unnatural higher pitch, you'll waltz across the band twice as fast. (And someone will no doubt be accused of frequency drift).

2. Mistuning results in serious harmonic distortion on the voice, and should be quite noticeable to the average ear. Some will claim that if they don't know how the other person's voice actually sounds, they can't tune him in properly, but this is not true. With a little practice, it will be fairly easy to tell. Some voices are relatively rich in harmonics, and are easier to tune in than a person with a "flat" voice. Also, a transmitter which is being operated properly with low distortion will be easier to tune in than one which is being over-driven and is generating excessive distortion. There is no mistaking when you have a station tuned right on the nose. It will sound just like "AM", so to speak. Mainly, avoid the habit of tuning so everyone sounds higher than normal pitch, or like Donald Duck. This is incorrect, unnecessary, and sounds terrible.
3. A vernier control for receive frequency, sometimes referred to as "incremental tuning", is not available on the Swan-500C. Such a device is not necessary if proper tuning habits are exercised.
4. Your Swan-500C will automatically transmit on exactly the same frequency as the one to which you are listening. There is no adjustment for making them the same, since by using the same oscillator for both send and receive, it happens automatically. If separation of receive and transmit frequency control is desired, the model 406C or 410C VFO unit may be used. In this case, the model 22 dual VFO adaptor must be installed in the 500C.

TRANSMITTER TUNING

Note: The sideband selector switch should be in the "NORM." position during tune up.

Caution: The Model 500C covers several frequency ranges outside the amateur bands. Care must be exercised not to transmit on these frequencies.

1. Switch the Function Switch to TRANS. mode, and observe the cathode current reading on the meter.
2. Quickly rotate the CAR. BAL. control on lower right corner until the meter reads minimum. This will occur with the control near 12 o'clock. If the control has no effect at this time, do not be concerned.
3. Next, adjust the P.A. BIAS control on the back of the chassis until the meter reads 50 ma. This is 50 ma. on the zero to 800 ma. scale.
4. If this is the first time the Transceiver is being tuned to this band, set the COARSE LOAD Switch to position 4. After experience in tuning up, the control may be set to whatever position has been found optimum on each respective band.

   Now, with the Function Switch still in TRANS. mode, in rapid succession:

   (a) Turn the CAR. BAL. control clockwise approximately 30 degrees, or one "hour" in position.

   (b) Rotate the P.A. GRID control for maximum meter reading.

   (c) Rotate the P.A. PLATE control for minimum meter reading, or "dip".

   (d) Readjust CAR. BAL. control for minimum reading.

   IMPORTANT — Tuning the P.A. PLATE for minimum, or "dip", is known as "resonating" the power amplifier plate circuit, and is very important to preserving P.A. tube life. If the transceiver is held in TRANS. or CW position for more than a few seconds while out of resonance and with some grid drive, the 6LQ6 tubes may be severely damaged. For this reason we repeat: CAUTION — Do not hold the transceiver in TRANS. or CW position for any length of time without immediately resonating the P.A. PLATE circuit. The P.A. GRID must be peaked, as in (b) above, and this requires some carrier inserted, as described in (a), so it can be seen that these steps must be performed quickly. If the COARSE LOAD control is too far clockwise, it may not be possible to find a "dip" with the P.A. PLATE control. For this reason, be sure to observe the first sentence in this section, Step 4.

5. Before switching to the TUNE position, it should be noted that the meter will be reading relative R.F. output in this position, instead of cathode current as it does in TRANS. and CW position. Also, the CW sidetone will be audible, when in TUNE position.

   Switch to the TUNE position, and adjust P.A. PLATE, P.A. GRID, and P.A. LOAD controls for maximum reading. Use the OUTPUT LEVEL control to keep the meter reading around midscale. Advance the COARSE P.A. LOAD switch clockwise a step at a time until the position for maximum output reading is found. The FINE LOAD CONTROL is used for vernier adjustment. The P.A. PLATE and P.A. LOAD controls will interact with one another, so each time one is peaked, the other should be re-peaked until the highest meter reading is reached. There is no interaction with the P.A. GRID control, so it need only be peaked once.

   CAUTION: Do not hold the transceiver in TUNE position for more than 30 seconds at a

time, even though the P.A. PLATE is resonated. When in TUNE position, the 6LQ6 tubes are running at full grid drive, and they are dissipating considerably more power than they do during normal voice transmission, so a short tuning period should be observed.

Note that the OUTPUT LEVEL control has no effect on transmitter output, but controls only the meter reading when in TUNE position. The meter reading at this time is strictly a relative indication to provide a means for adjusting P.A. PLATE and LOAD controls to maximum output. This method of tuning the Power Amplifier is somewhat different and more effective than "dipping" and "loading" to a specific cathode current. By tuning for maximum output the transmitter will be operating at peak efficiency, and maximum linearity, thus also with minimum distortion products.

6. After the transceiver has been tuned to maximum output, as described in Step 5, it may be of interest to check cathode current. This may be done by switching to CW mode, inserting a CW key in the key jack, and momentarily rotating the CAR. BAL. control to full clockwise position. When the key is pressed the meter will show P.A. Cathode Current, and indicates to what power level the transmitter is tuned. If a CW Key is not at hand, a steady whistle into the mike will produce the same result. It will be found that cathode current reads higher on the lower bands, typically 500 or more Ma., and somewhat lower on 10 meters, typically 450 to 500 ma. The cathode current reading will help indicate the condition of the P.A. tubes, although other factors can also affect the reading, such as condition of the driver tube, other tubes used in the transmitter circuitry, and power supply input voltage. NOTE — The cathode current level to which the PA is loaded will have no bearing on tube life. When transmitting with normal voice modulation, average power input will be the same regardless of how high or low the PA was loaded while tuning. Peak output, linearity, and lowest distortion will go along with maximum loading. In other words, you will not extend tube life by loading to a lesser degree. The secret to long tube life is simply to keep TUNE-up periods short and not too frequent.

7. VOICE TRANSMISSION. After tuning up as outlined above, switch to TRANS. position and then carefully set the CAR. BAL. control for minimum meter reading. While speaking into the mike, slowly rotate the MIC. GAIN control until occasional peak readings of 200 to 225 ma. are obtained. With most microphones, the MIC. GAIN control will be set between 9 and 12 o'clock, but it may vary considerably. The ALC circuit will help limit cathode current to about 225 ma., but turning the MIC. GAIN up too high will still produce flat-topping and spurious signals, so it is important to hold it down. The meter is quite heavily damped, and its reading with average voice modulation may not look very impressive, but the voice peaks are going well over the 520 watt power rating of your Swan transceiver, and signal reports will verify this fact. NOTE: Transceiver will not modulate with Function Switch in CAL. position.

8. AM OPERATION (Single Sideband With Carrier)

   (a) Tune transmitter to full output on single sideband as described above.

   (b) Rotate MIC GAIN control to minimum, full CCW.

   (c) With Push-to-talk pressed, rotate CAR. BAL. control until cathode current is approximately 150 ma.

   (d) While talking in a normal tone of voice into the microphone, increase MIC. GAIN setting until the meter kicks upward slightly. This setting will result in excellent AM transmission.

9. CW OPERATION

   (a) Insert a CW Key in the Key Jack on back of the 500-C Transceiver.

   (b) After tuning up for maximum output as outlined in Step 5, switch to CW mode, press the key, and insert carrier by rotating the CAR. BAL. control until the meter indicates a P.A. Cathode Current of 450 to 500 Ma. Power input will then be the rated 360 watts. It may be reduced to whatever level is required to maintain contact. Many times the full power level is not necessary.

   (c) In manual CW operation it will be necessary to switch the Function control back to REC. for receiving and then to CW for transmitting.

   (d) When the VOX accessory, model VX-2 is used, Break-In operation may be employed. Simply move the PTT-VOX switch which is located under the meter to VOX position, and rotate the Function control to CW mode. Rotate the VOX GAIN fully clockwise and the ANTI-TRIP control on the VX-2 to full counterclockwise position. Press the CW

key to transmit. When you stop keying the circuits will automatically switch back to receive mode. Adjust the VX-2 DELAY control to the position which gives the desired delay time in returning to Receive.

(e) While receiving, the carrier oscillator frequency is located 300 cycles outside the passband of the crystal lattice filter, thus providing a single heterodyne note, or "single-signal" for CW reception. When transmitting in CW mode, the carrier frequency is moved approximately 800 cycles higher, placing it well inside the passband. This frequency shift is termed "Off-set CW transmit frequency," and avoids the problems encountered when the receive and transmit frequency are exactly the same. This is desirable for voice communication, of course, but when using the CW Keying mode the receiver must be tuned off frequency several hundred cycles in order to hear an audio beat. By providing this shift automatically in the 500-C, CW operation is greatly simplified.

SIDETONE OSCILLATOR

A sidetone oscillator circuit permits CW monitoring. A quiet tone at about 800 cycles is heard coming from the speaker or headphones. The strength, or volume of this tone may be changed if desired by increasing the resistance value of R1202 in the sidetone Circuit. Note that this tone is also heard during transmitter Tune-up.

D. ALIGNMENT AND TROUBLESHOOTING

GENERAL

The following procedures are given in the order performed during the factory alignment for the transceiver. For home servicing, only partial alignment may be necessary. Read all procedures carefully before commencing either partial or complete alignment. See Figures 4 and 5 for component placement.

Equipment Required

1. Calibrated audio frequency signal generator, range 200 to 5000 cps.
2. 500 watt dummy load with output meter
3. Vacuum tube voltmeter
4. Walsco 2543 coil adjustment tool
5. Field strength meter
6. Calibrated RF Signal Generator

Pre-Alignment Conditions

1. Neutralizing capacitors C413 set to mid-point and C315 set to approximately 3/4 turn from full compression.
2. Peak IF transformers for maximum background noise with AF and RF gain full clockwise (either bottom or top core adjustment).
3. Loosely couple field strength meter to C318 (off pin 9 of V4) with alligator clip on ceramic capacitor body.
4. Transmit bias potentiometer full counter-clockwise (maximum bias).

VFO AMPLIFIER PLATE CIRCUIT ALIGNMENT

With VTVM from pin 1 of V7, Receiver Mixer, to ground, on -15 volt scale, adjust VFO Amplifier Plate coils for peak VTVM heading as follows:

Band	VFO Frequency (kc)	Dial Frequency (kc)	Coil
80	9,300	3,800	L104
40	12,625	7,125	L103
15	15,725	21,225	L102
10	23,000	28,500	L101

TRANSMITTER MIXER AND DRIVER PLATE CIRCUIT ALIGNMENT

1. Remove screen voltage from V4 and V5 by disconnecting the wire from terminal strip immediately adjacent to V5 base. (A, Fig. 5).

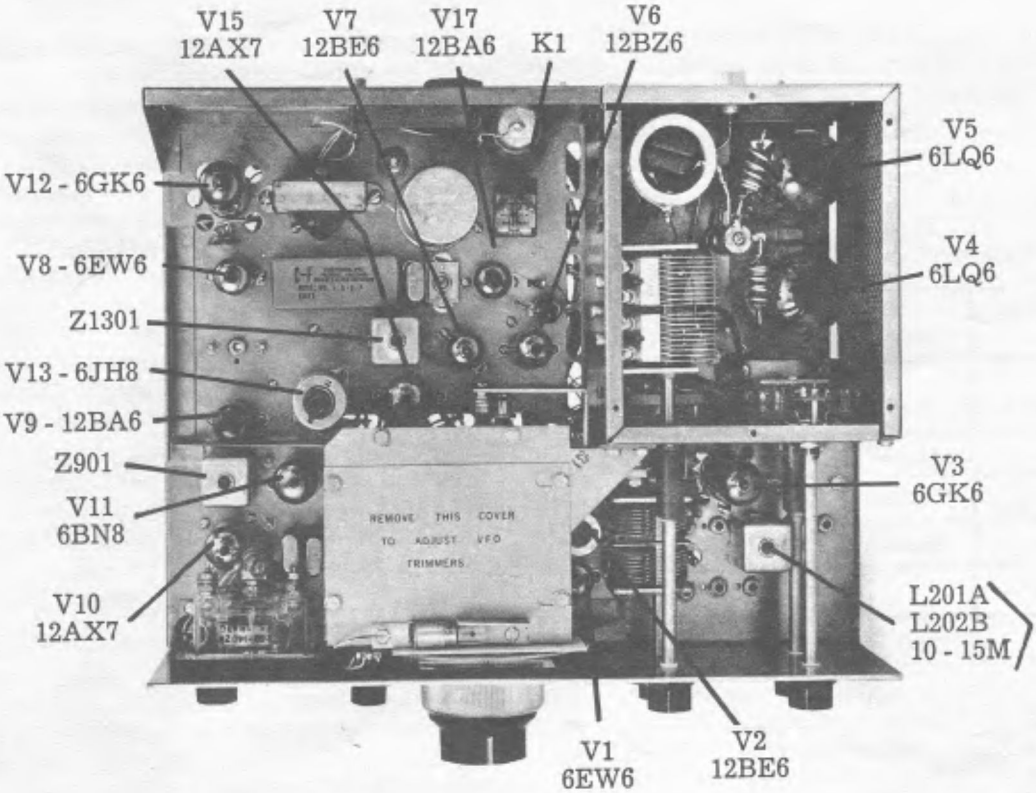

FIGURE 4
TOP VIEW,
MODEL 500 C
TRANSCEIVER

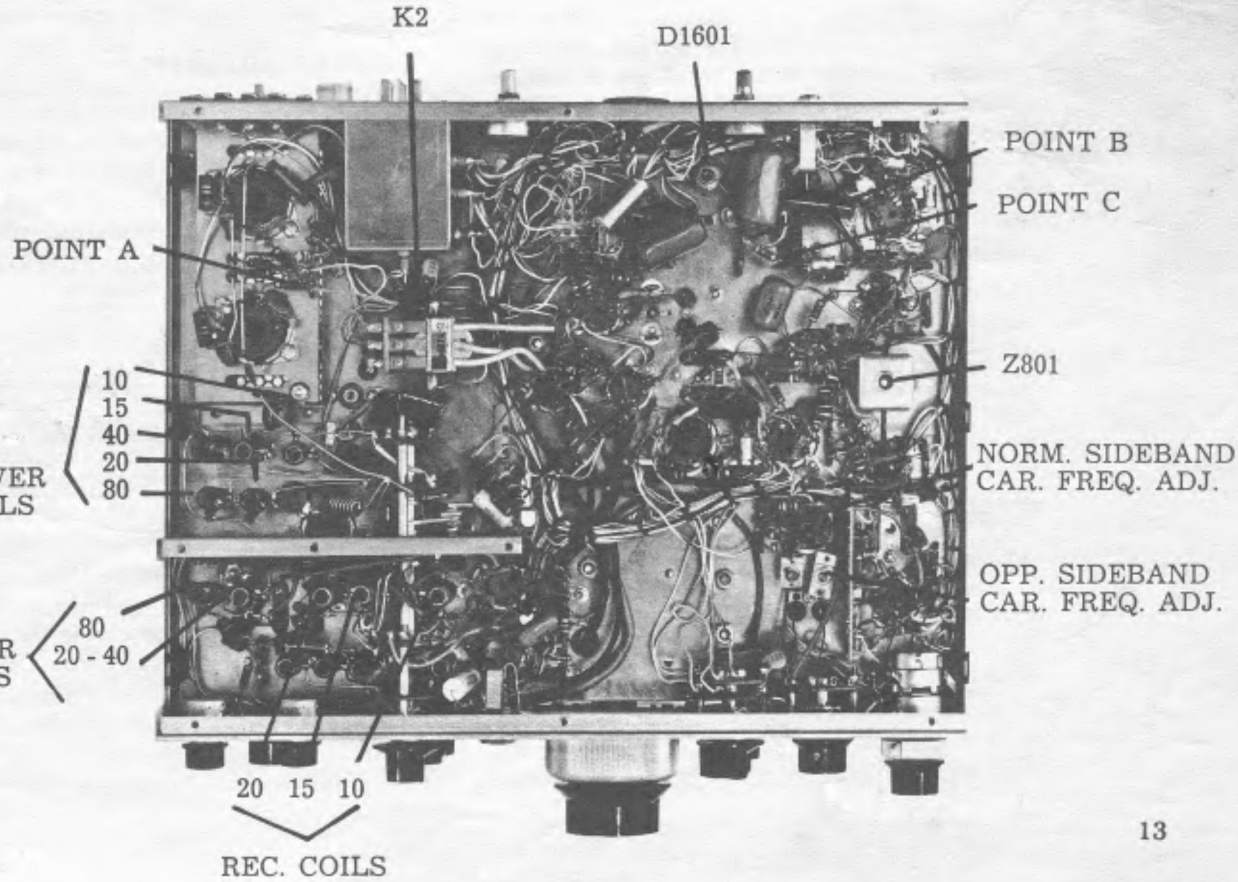

FIGURE 5
BOTTOM VIEW,
MODEL 500 C
TRANSCEIVER

2. Connect VTVM across R412, 4.7K resistor between pins 1 and 2 of terminal strip, using 15 volt scale. (Points B and C, Fig. 5).

Procedure:

Adjust band switch and P.A. Grid as shown, and adjust coils for peak VTVM reading as follows, with function switch in Tune position:

Band	P.A. Grid	Dial Freq. (kc)	Adjust
80	12 o'clock	3,800	L205, L305
40	11 o'clock	7,150	L204, L304
20	11 o'clock	14,150	L203, L303
15	2 o'clock	21,450	L202, L302
10	2:30 o'clock	29.7	L201, L301

*Note: If VTVM and field strength meter exceed full scale reading, switch to REC. position, actuate push-to-talk circuit, and insert carrier with carrier balance control to keep reading on scale. Field strength meter and VTVM must both peak at same time since it is possible to tune the coils to the VFO frequency on 10 meters. Care must be taken that the coils be tuned properly.

Following the above procedures, replace screen wire to pin 1 of terminal strip adjacent to V5.

ADJUSTMENT OF CARRIER FREQUENCY

(A) Normal Sideband, with Sideband Selector set to "NORM" position. The carrier frequency trimmer, C1406, is mounted on a bracket under the chassis near the carrier oscillator circuit board, Q14. There are two trimmers mounted side by side. The front trimmer is C1406, used with normal sideband. The rear trimmer is C1405, used with opposite sideband. Be sure to adjust the correct trimmer.

The normal sideband carrier should be adjusted to exactly 5500 KC. This can be easily checked by switching the function switch to "CAL." position. This turns on the 100 KC crystal calibrator, and an audio beat note will be heard if the carrier frequency is not set to exactly the 55th harmonic of the calibrator. Adjust the trimmer, C1406, for zero beat. The crystal lattice filter is designed for 6 db roll-off between 250 and 350 cycles when the carrier is at exactly 5500 KC. Note: It is essential that the calibrator crystal is set to exactly 100 KC. This should be checked from time to time with a separate receiver tuned to WWV, or to a broadcast transmitter whose frequency is at a multiple of 100 KC. See below for data on calibrator adjustment.

If, after a period of time, an audio beat is heard when the crystal calibrator is turned on, and it is heard regardless of where the tuning dial is set, either the carrier frequency or the calibrator frequency has shifted. It takes very little shift to produce a low pitch audio beat. At that time, the 100 KC calibrator frequency should first be checked, and adjusted. (See below.) Then the carrier trimmer, C1406, should be set for zero audio beat.

(B) Opposite Sideband, with Sideband Selector set to "OPP." position. Nominal carrier frequency for opposite sideband is 5503.3 KC C1405, the rear trimmer is used for adjustment. Check audio roll-off with an audio generator coupled into the mike jack, and a dummy load connected to the antenna jack. Adjust C1405 for 6 db roll-off at 300 cycles.

P.A. NEUTRALIZATION

With P.A. coarse load in position 1, set freq. to 14.150, PA Plate control at 9 o'clock, insert carrier and peak P.A. Grid control, adjusting Car. Bal. control for 200 MA. Turn PA control slowly through resonance. Cathode current should dip smoothly and rise to 200 MA on the low capacity side of resonance. If, instead, there is a peak above 200 MA either side of the dip, stop rotation of the PA plate control at the peak and adjust C413 to reduce Ip to 200 MA. Repeat above check and readjust as necessary to obtain the desired smooth dip. For 10 meters, use above procedure but adjust #C 315.

S-METER ADJUSTMENT

With antenna disconnected and with RF Gain fully clockwise, set R907, located on rear panel, for zero meter reading. Make sure no local signals are being received. It will be noticed that a slight change in S-meter zero setting will change when switching from band to band. Also, when using the ANL circuit there will be a decrease in the S-Meter reading. This is normal.

CRYSTAL CALIBRATOR FREQUENCY ADJUSTMENT

Adjustment of the Crystal Calibrator must be made with an outside source, such as an external receiver that will tune to WWV. Remove transceiver cabinet and locate the calibrator oscillator tube, V17. Wrap one end of an insulated wire lead loosely around V17. Connect the other end to the antenna terminal of the external receiver. Tune external receiver to zero beat WWV. Now turn on calibrator in 500C and by listeneing to it on the external receiver, adjust trimmer capacitor (C1751) to zero beat with WWV.

VFO ALIGNMENT

A trimmer condenser is provided for each VFO range. Trimmer adjustment for the five VFO ranges is through top cover of the VFO compartment. An insulated adjusting tool is recommended. Dial tracking has been factory set by pruning the coil, and will not ordinarily require further adjustment.

When dial calibration changes beyond the adjusting range of the front panel dial set control, calibration may be restored by carefully adjusting the trimmer for that range.

EXAMPLE:

The 40 meter band at 7000 KC point is off frequency approximately 8 KC on the high side and cannot be restored by adjusting dial set on front panel.

1. Set dial set to twelve o'clock position.
2. Set VFO at 7008 KC so as to hear 100 KC Calibrator.
3. With an insulated alignment tool in one hand and the VFO dial in the other, rotate the dial a small amount at a time down towards the 7000 KC point, but not enough to lose the 100 KC signal. Now rotate the trimmer so as to zero beat the 100 KC signal. Again rotate the dial a small amount down the band so you still hear the calibrator, stop and with trimmer rezero beat the signal again. Repeat these steps until you have reached 7000 KC point on the dial. Use caution so you do not lose the 100 KC signal. This will prevent you from aligning on the wrong 100 KC note which would put the VFO off frequency by a 100 KC. The following chart lists the actual oscillating frequency of the VFO at band edges.

Dial Frequency	Oscillator Frequency
3500	9000
3800	9300
4000	9500
7000	12,500
7200	12,700
7300	12,800
14,000	8500
14,200	8700
14,350	8850
21,000	15,500
21,250	15,750
21,450	15,950
28,000	22,500
28,500	23,000
29,000	23,500
29,700	24,200

TROUBLESHOOTING GUIDE	
DEFECT	POSSIBLE CAUSE
PA IDLING CURRENT UNSTABLE	1. Defective 6LQ6 — See NOTE. 2. Defective Bias Potentiometer 3. Defective Bias Supply
INABILITY TO LOAD TO 400-500 MA. (SEE PAGE 10)	1. PA Grid Improperly Tuned 2. Bandswitch Improperly Set 3. Antenna Not Resonant at Frequency 4. Defective Transmission Line 5. Defective Mobile Antenna Coil 6. V2, V3, V4, V5 Defective 7. R407 or R408 Defective
INSUFFICIENT CARRIER SUPPRESSION	1. Carrier Balance Control Improperly Adjusted 2. Defective 6JH8 Balanced Modulator 3. Carrier Oscillator Frequency Incorrect
INSUFFICIENT SIDEBAND SUPPRESSION	1. Excessive MIC. Gain 2. Incorrect PA Load Adjustment 3. Carrier Oscillator Frequency Incorrect
MICROPHONICS IN RECEIVER	1. Z901 Improperly Tuned 2. V14, V10, V8, V7, or V6 Defective
LOW RECEIVER SENSITIVITY	1. PA Grid, Plate, or Load Improperly Set 2. Bandswitch Improperly Set 3. K2 Back Contacts Defective 4. V6, V7, V8, V9, V10, V11, V12 Defective

NOTE: It is recommended that the final tubes be replaced with RCA tubes.

VOLTAGE CHART

TUBE TYPE		PIN NO.								
		1	2	3	4	5	6	7	8	9
V1-6EW6	R	0	.75	6.3 A.C.	0	140	130	0		
	T	0	.75	6.3	0	125	125	0		
V2-12BE6	R	-100	0	12.6 A.C.	0	240	215			
	T	-28	0	12.6	0	245	100			
V3-6GK6	R	0	-34	0	6.3 A.C.	0	0	270	270	
	T	0	-6	0	6.3	0	0	270	250	
V4-6LQ6	R	0	-95	—	6.3 A.C.	0	-95	0	0	0
	T	0	-95	—	6.3	0	-95	250	0	0
V5-6LQ6	R	0	-95	—	6.3 A.C.	12.6 A.C.	95			
	T	250	-95	—	6.3	12.6	95			
V6-12BZ6	R	.5	.8	0	12.6 A.C.	270	150	0		
	T	.5	0	0	12.6	270	-20	0		
V7-12BE6	R	-31	0	12.6 A.C.	0	250	55	.1		
	T	-26	0	12.6	0	250	-20	.3		
V8-6EW6	R	.5	.5	12.6 A.C.	6.3 A.C.	230	130	0		
	T	.7	.5	12.6	6.3	250	150	0		
V9-12BA6	R	-.05	0	12.6 A.C.	0	240	125	1.9		
	T	-.5	0	12.6	0	255	-15	0		
V10-12AX7	R	115	.7	1	12.6 A.C.	0	175	0	1.5	0
	T	45	.7	-.5	12.6	0	245	-90	0	0
V11-6BN8	R	.5	2.6	.5	6.3 A.C.	12.6 A.C.	1.2	210	38	78
	T	1.6	2.6	1.6	6.3	12.6	0	100	20	40
V12-6GK6	R	0	8	—	12.6 A.C.	6.3 A.C.	—	270	250	0
	T	0	8	—	12.6	6.3	—	260	250	0
V13-6JH8	R	12	11	0	6.3	0	-100	0	270	250
	T	12	11	64	6.3	0	0	0	260	250
V14-										
V15-12AX7	R	70	0	0	6.3 A.C.	6.3 A.C.	114	0	.7	0
	T	46	0	0	6.3	6.3	50	0	.4	0
V17-12BA6	R	0	0	12.6 A.C.	0	280	280	96		
	T	0	0	12.6	0	270	270	92		
Voltage Checks Made With 20,000 Ohms Per Volt VTVM										

E. PARTS LIST

CAPACITORS

C101	.002, 20% 500V Disc
C102	.01, +80-20%, 500V Disc
C103	.002, 20% 500V Disc
C104	.01, +80-20%, 500V Disc
C105	.01, +80-20%, 500V Disc
C106	50, 5% 500V Mica
C107	10, 5% 500V Mica
C201	01, +80-20%, 500V Disc
C202	40-40-20 MFD 450-450-25 WV Elect.
C203	.002, 20% 1KV Disc
C204	.001, 5% 500V Mica
C205	100 5% 500V Mica
C206	24, 5% 500V Mica
C207	120, 5% 500V Mica
C208	27, 5% 500V Mica
C209	20, 5% 500V Mica
C210	20, 5% 500V Mica
C211	50, 5% 500V Mica
C213	3.3 pf 10% 500V Ceramic
C214	.1 mf 10% 200V Tubular
C301	.01 +80-20%, 500V Disc
C302	.01 +80-20%, 500V Disc
C303	100 5% 500V Mica
C304	75 5% 500V Mica
C305	100 5% 500V Mica
C306	24, 5% 500V Mica
C307	50, 5% 500V Mica
C308	.002, 20% 500V Disc
C309	510, 5% 500V Mica
C310	540, 5% 500V Mica
C311	100, 5% 500V Mica
C312	680, 5% 500V Mica
C313	50, 5% 500V Mica
C314	91, 5% 500V Mica
C315	1.5-20 pf Mica Trimmer
C316	15, 20% 3 KV Disc
C317	330, 5% 500V Mica
C318	.002, 20% 500V Disc
C401	.002, 20% 500V Disc
C403	.01, +80-20%, 500V Disc
C404	.01, +80-20%, 500V Disc
C405	.01, +80-20%, 500V Disc
C407	.01, +80-20%, 500V Disc
C408	.01, +80-20%, 500V Disc
C409	.01, +80-20%, 500V Disc
C412	.002, 20% 2 KV Disc
C413	20 pf P.A. Neut. Trimmer
C414	15, 20% 3 KV Disc
C415	270, 5% 2500V Mica
C416	270, 5% 2500V Mica
C417	320 pf P.A. Tune
C419	100 10% 6 KV Disc
C420	410 pf P.A. Fine Load
C421	Two 150±5% 1000 WV Mica
C422	Two 150±5% 1000 WV Mica
C423	330, 10% 500V Mica
C424	330, 10% 500V Mica
C425	330, 10% 500V Mica
C426	330, 10% 500V Mica
C430	.002, 20% 1 KV Disc
C431	.47 10% 100V Tubular
C432	.01 +80-20%, 500V Disc
C433	.002, 20% 500V Disc
C601	.01 +80-20%, 500V Disc
C602	.01 +80-20%, 500V Disc
C603	.01 +80-20%, 500V Disc
C604	10, 5% 500V Mica
C605	30, 10% 500V Disc
C606	10, 5% 500V Mica
C701	.001 ±20% 500V Disc
C702	30, 10% 500V Disc
C703	.01 +80-20% 500V Disc
C704	220 5% 500V Mica
C705	430 5% 500V Mica
C709	.01, +80-20% 500V Disc
C802	.01, +80-20% 500V Disc
C803	.01, +80-20% 500V Disc
C804	10, 10% 500V Disc
C805	.01, +80-20% 500V Disc
C806	50 5% N750 Disc
C807	50 5% N750 Disc
C901	.01 +80-20% 500V Disc
C902	.01 +80-20% 500V Disc
C903	.01 +80-20% 500V Disc
C904	.01 +80-20% 500V Disc
C1001	100, 5% 500V Mica
C1002	220, 20% 500V Disc
C1003	.002, 20% 500V Disc
C1004	.001, 20% 500V Disc
C1005	.001, 20% 500V Disc
C1006	.22 mf 200VDC Tubular
C1007	500, 20% 500V Disc
C1008	.002 20% 500V Disc
C1009	.002 20% 500V Disc
C1101	.001 20% 500V Disc
C1102	.01 +80-20% 500V Disc
C1105	.01 +80-20% 500V Disc
C1201	.01 +80-20% 500V Disc
C1202	220 20% 500V Disc
C1203	.0047 10% 1000V Tubular
C1204	.005 10% 1 KV Disc
C1301	.01 +80-20% 500V Disc
C1302	220 20% 500V Disc
C1303	.01 +80-20% 500V Disc
C1304	.002 20% 500V Disc
C1306	.01 +80-20% 500V Disc
C1401	27, 5% 500V Mica
C1402	.001 ±20% 500V Disc
C1403	50, 5% 500V Mica
C1404	15, 5% 500V Mica
C1405	6-30 pf Ceramic Trimmer
C1406	6-30 pf Ceramic Trimmer
C1407	.01 +80-20% 500V Disc
C1501	.01, 400V Tubular
C1502	.01 +80-20% 500V Disc
C1503	.01 +80-20% 500V Disc
C1504	100, 20% 500V Disc
C1505	.01 +80-20% 500V Disc
C1506	20 mf 25 VDC
C1507	.47 200V
C1601	80 mf, 150 WV Electrolytic
C1602	.01 +80-20% 500V Disc
C1603	1 MF 50V
C1604	10 MF 150 WV Electrolytic
C1605	.001 - KV Feedthru x 7
C1606	.002 2 KV Disc
C1701	270, 2% SM
C1702	470, 5% SM
C1703	430, 2% SM
C1704	27, 5% SM
C1705	430, 2% SM
C1706	5-12 Main Tuning
C1707	.01, 500V Disc
C1708	11.6 pf Trimmer
C1709	22, NEG Disc Selected
C1710	10, NPO Disc
C1711	5, NEG Disc Selected
C1712	11.6 pf Trimmer
C1713	10, NEG Disc Selected
C1714	30 NPO Disc
C1715	11.6 pf Trimmer
C1717	2 pf Dial Set
C1718	10 NEG Disc Selected
C1719	10 NPO Disc
C1720	20, NEG Disc Selected
C1721	39, NPO Disc
C1722	11.6 pf Trimmer
C1723	2.5 NEG Disc Selected
C1724	6.7 pf Trimmer
C1751	5-80 Ceramic Trimmer
C1752	150, 5% 500V Mica
C1A-B	85 pf Per Section

RESISTORS

R101	82 ohms
R102	56 ohms
R103	47K - 1 watt
R104	12K - 2 watt
R105	4.7K
R106	2.2K
R201	27K
R202	18K - 2 watt
R203	4.7K - 1 watt
R204	6.8K
R205	6.8K
R206	4.7K
R207	27K
R301	100K
R302	270K
R303	100 ohms
R304	10K
R305	8.2K
R306	10K
R401	2.2 Meg
R402	1K
R403	100 ohms
R404	100 ohms
R405	Selected
R406	470-5%-1/2W

Capacitor when listed as whole number are in Picofarads. When listed as decimal number value is in microfarads. Unless otherwise specified.

R408	1 ohm-5%-1 watt
R409	1 ohm-5%-1 watt
R410	10K Bias Pot.
R411	10K - 1 watt
R412	4.7K
R413	4.7K
R413	100K
R414	10K
R415	1K Output Level Pot.
R601	1K
R602	56 ohms
R603	47K - 1 watt
R604	1K
R701	27K
R702	22K - 1 watt
R703	47K
R801	470 ohms
R802	56 ohms
R803	47K
R804	1K
R902	100 ohms
R903	27K - 1 watt
R904	47 ohm
R905	270K
R906	100K
R907	1K S Meter Zero Pot.
R1001	10K
R1002	1K
R1003	100K
R1004	270K
R1005	2.2 Meg.
R1006	2.2 Meg.
R1007	270K
R1008	1 Meg.
R1009	2.7K
R1010	100K
R1101	270K
R1102	1K
R1103	47K
R1104	2.7K
R1105	270K
R1106	120, 1 watt
R1107	47K
R1201	1 Meg. A.F. Gain Pot.
R1202	330 ohm
R1203	270K
R1204	15K
R1205	680K
R1206	27 ohm
R1301	47K
R1302	47K
R1303	150K
R1304	4.7K
R1305	5K CAR. BAL. Pot.
R1306	47K
R1307	47K
R1308	100K
R1309	100K
R1310	27K
R1311	47K
R1312	2.7K
R1313	2.7K
R1401	1 Meg.
R1402	270 ohm
R1403	27K
R1404	27K
R1405	1K
R1501	150K
R1502	1K
R1503	1 Meg. MIC Gain Pot.
R1504	270K
R1505	2.2 Meg.
R1506	47K
R1601	500 - 10 watt
R1602	800 - 10 watt
R1603	27K
R1604	27K
R1605	750 - 10 watt
R1606	6K - 10 watt
R1608	100K
R1609	470K
R1610	270K
R1611	270K
R1612	10K RF Gain Pot.
R1613	270K
R1614	27K
R1615	1K
R1701	1K, 5%
R1702	1K, 5%
R1703	1K, 5%
R1704	470 ohms 5%
R1705	2.7K
R1706	2.7K
R1707	470 ohms 5%
R1751	1 Meg.
R1752	27K
R1753	100K

COILS

L101	23 mc-2 uh
L102	16 mc-4 uh
L103	12 mc-7 uh
L104	9 mc-4 uh
L201A&B	28 mc-.5 uh-21 mc-.5 uh
L202A&B	14 mc-2 uh-7 mc-1.6 uh
L203	4 mc-11 uh
L204	RFC-200 uh
L301	28 mc-2 uh
L302	21 mc-2 uh
L303	14 mc-3.2 uh
L304	7 mc-3.6 uh
L305	4 mc-11 uh
L306	RFC-200 uh
L401	14 mc-0.8 uh
L403	RFC-30 uh
L404	RFC-100 uh
L405	RFC-55 uh
L602A&B	28 mc-1.4 uh-1.1 uh
L603A&B	21 mc-2 uh-4.8 uh
L604A&B	14 mc-6.4 uh-3.4 uh
L1001	RFC-200 uh
L1601	RFC-200 uh
L1602	RFC-.82 uh
L1603	RFC-.82 uh
L1604	RFC-.82 uh
L1701	80M-VFO Coil
L1702	40M-VFO Coil
L1703	20M-VFO Coil
L1704	15M-VFO Coil
L1705	10M-VFO Coil
L1706	RFC-200 uh
L1707	RCD-200 uh

TRANSFORMERS

Z301	Parasitic Suppressor
Z401	Parasitic Suppressor
Z501	Parasitic Suppressor
Z801	5500 kc I.F. Trans.
Z901	5500 kc I.F. Trans.
Z1301	5500 kc BAL. MOD. Trans.
T1201	A.F. Output Trans.

SWITCHES

S-1	Power On-Off (part of AF-RF Gain Control)
S-2	CAL-REC-TRANS-CW-TUNE
S-3	VOX PTT
S-4	A-B-C-D-E-F Bandswitch
S-5	PA Coarse Load
S-6	Sideband Selector
S-7	ANL ON-OFF Switch
S-4G	OSC. Selector

DIODES

D401	RCA 38679
D402	RCA 38679
D403	1N34A Diode
D1001	1N 34A ANL
D1002	1N 34A ANL
D1201	RCA 38679 CW Switching
D1202	RCA 38679 CW Switching
D1601	1N 2974A Zener
D1602	750 Mil. Relay Quieting
D1603	RCA 38679

RELAYS

K1	4PDT Relay, 12 VDC Coil
K2	3PDT Relay, 12 VDC Coil

CRYSTALS

Y1401	5503.3 KC Car. Osc.
Y1402	5500.0 KC Car. Osc.
Y1751	100 KC Crystal Calibrator

TUBES

V1	6EW6 VFO Amplifier
V2	12BE6 Trans. Mixer
V3	6GK6 P.A. Drive
V4	6LQ6 Power Amplifier
V5	6LQ6 Power Amplifier
V6	12BZ6 Rec. R.F. Amp.
V7	12BE6 Rec. Mixer
V8	6EW6 1st I.F. Amp.
V9	12BA6 2nd I.F. Amp.
V10	12AX7 Prod. Det./Rec. A.F.
V11	6BN8 AGC Amp./Rect.
V12	6GK6 A.F. Output Amp.
V13	6JH8 Bal. Mod.
V15	12AX7 Mic. Amplifier
V17	12BA6 100 kc Oscillator

TRANSISTORS

Q1	2N706
Q2	2N706
Q14	2N706

Resistors are 1/2 watt unless specified. K equals 1000 ohms.

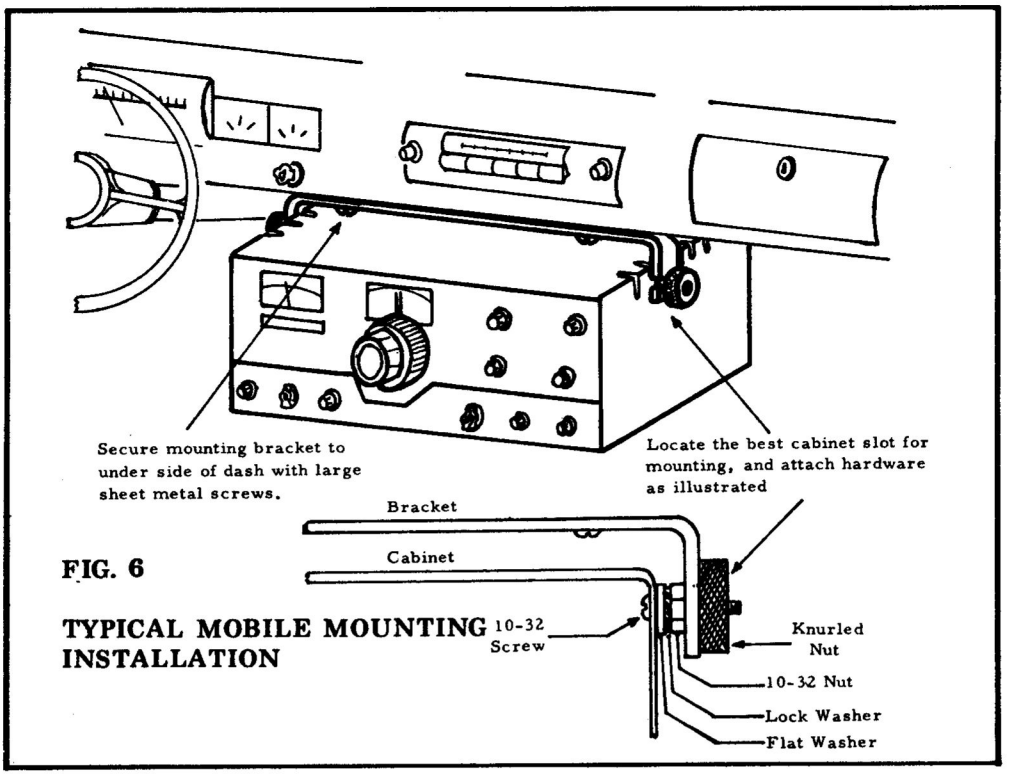

FIG. 6

TYPICAL MOBILE MOUNTING INSTALLATION

OUTBOARD VFO OPERATION WITH THE 500C

Various outboard VFO operations are possible with the Swan 500C.

SPLIT FREQUENCY OPERATION

For those desiring to work split frequency, transmit on one—receive on another, the Model 508 VFO is required. (See page 21). Complete instructions are supplied with each model. The Model 508 plugs into the VFO accessory socket on back of the 500C.

SWAN 510X CRYSTAL CONTROLLED OSCILLATOR (See also page 20)

The model 510X crystal oscillator has been designed for crystal control operation on NET and MARS frequencies and may be plugged directly into the accessory socket on back of the Swan 500C by removing the jumper plug. Plugging the Model 510X directly into the 500C automatically removes the inboard VFO from the circuit.

The Model 510X oscillator unit provides for added versatility witht Swan transceivers by crystal controlling the operating frequency. Not only does this permit fixed frequency "net" operation in the 80, 40, and 20 meter amateur bands, but the 510X also permits operation outside the amateur bands for MARS, commercial, and other services.

The Model 500C will tune the following ranges without modification:

3.5 mc Range: 3.2 to 4.6 mc
7 mc Range: 6.5 to 8.2 mc
14 mc Range: 13.8 to 15 mc

These ranges can be adjusted either up or down quite readily in the field or at the factory, if necessary.

NOTE: Frequencies between 5.1 and 5.9 mc cannot be used because of proximity to the 5500 kc I.F. system.

The 510X oscillator will plug directly into the VFO socket provided on back of the 500C with no modification.

510X CRYSTAL CONTROLLED EXTERNAL OSCILLATOR

For MARS operation, Net and other fixed channel operations.

SPECIAL NOTE: If both Upper and Lower Sideband operation is required on a given frequency channel, it will require two crystals in the 510X. This is because the I.F. carrier frequency moves 3 kc when the transceiver sideband selector control is switched. A corresponding 3 kc shift is required in the 510X in order to stay on the same frequency channel. Thus, if both sidebands are required, it will take two crystal positions in the 510X. Information is provided further on in these instructions for calculating crystal frequency. It is very important to remember that two controls must always be switched when changing sidebands. One is the sideband selector switch on the transceiver, and the other is the channel selector on the 510X. A selector switch is provided on the 510X for Transceiver "VFO" operation or "crystal" oscillator operation.

(B) CALCULATION OF CRYSTAL FREQUENCIES.

1 - **For operation between 3200 and 4600 kc,** (3.5 mc band):

Lower Sideband (Normal): Channel frequency Plus 5500 kc
Upper Sideband (Opposite): Channel frequency Plus 5503.3 kc

2 - **For operation between 6800 and 8000 kc,**

Lower Sideband (Normal): Channel frequency Plus 5500 kc
Upper Sideband (Opposite): Channel frequency Plus 5503.3 kc

3 - **For operation between 13,800 and 15,000 kc,** (14 mc band):

Upper Sideband (Normal): Channel frequency Minus 5500 kc
Lower Sideband (Opposite): Channel frequency Minus 5503.3 kc.

4 - **For operation between 20,900 and 21,500 kc,** (21 mc band):

Upper Sideband, (Normal): Channel frequency Minus 5500 kc
Lower Sideband, (Opposite): Channel frequency Minus 5503.3 kc

(C) INSTRUCTIONS FOR ORDERING CRYSTALS:

NOTE: Swan Electronics does not supply crystals for the 510X oscillator. They must be ordered direct from a crystal manufacturer in the following typical manner:

Name & Address of
Crystal Manufacturer
Gentlemen:

Please ship the following crystal(s) in the HC-6/U type holder with .093 inch diam. pins:

Quantity Frequency, plus or minus .0025 per cent, parallel resonance at 20 pf shunt capacity, 25 deg. cent.

.....kc
.....kc
.....(as calculated).....kc
.....kc
.....kc

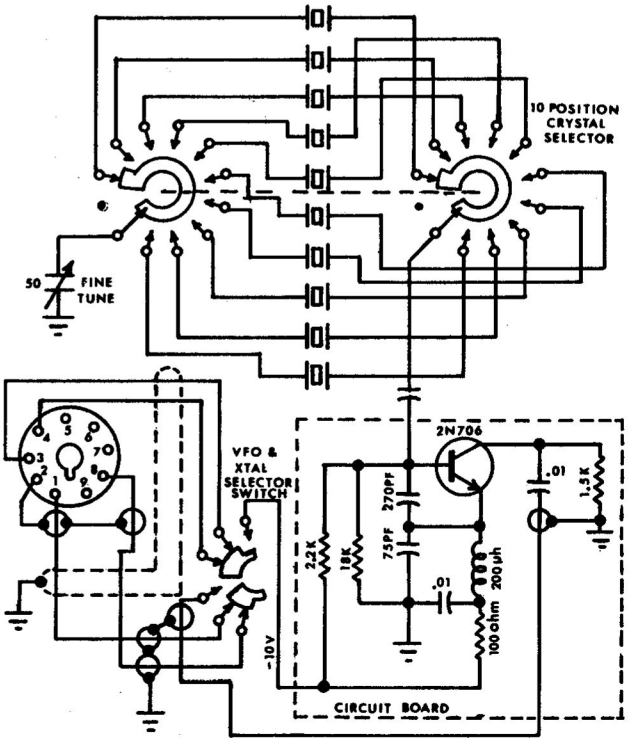

SCHEMATIC DIAGRAM MODEL 510X

Swan Electronics Corporation
Oceanside, California

PRELIMINARY OPERATING INSTRUCTIONS FOR SWAN MODEL 508 FREQUENCY CONTROL UNIT

The Model 508 Frequency Control Unit is designed to serve as an external VFO to be used with the Swan 500C Transceiver. It may also be used with the Model 350C when the accessory socket is installed on back of the transceiver as described in the 350C technical manual.
The 508 plugs directly into the back of the transceiver after the jumper plug has been removed from the Swan 500C.

OPERATION:

The position of the VFO selector switch on the front panel of the Model 508 will determine split-frequency operation, or transceiver operation on the Swan 500C VFO or the Model 508 VFO. Rotating the Selector Switch to "XCV 500C" will permit transceive operation with the frequency controlled by the internal VFO of the Model 500C.
The "TRANS 500C/REC 508" position will select split frequency operation. When in this position, the frequency of the transmitted signal will be controlled by the internal VFO of the Swan 500C. The frequency of the signal being received will be determined by the Model 508 VFO.
When rotating the Selector Switch to "XCV 508" the unit will be in transceive operation with the frequency determined by the setting of the VFO dial of the Model 508 VFO.

DIAL CALIBRATION

The dial of the Model 508 is basically calibrated in 5KC increments on each range. The 80 meter band is calibrated for direct Read-out on the dial. Calibration for all other ranges is read on the green portion of the dial. This dial is calibrated 0-500 and the reading of this scale would be additive to the megacycle range as selected by the VFO BandSwitch. For example: if the bandswitch is set for 7.0 megacycles, and the VFO dial is set for 250 on the green scale, the frequency is 7250 KC. When the bandswitch is rotated to 21 megacycles, VFO dial set on 350, the operating frequency would be 21350 KC, etc. The smaller white dial is a reference scale and is calibrated in approximately 1 KC increments.

VFO ALIGNMENT

A trimmer condenser is mounted on each of the VFO coils.
Dial tracking has been set by pruning the coil, and will not ordinarily require further adjustment.
When dial calibration changes beyond the adjusting range of the front panel "dial set" control, calibration may be restored by carefully adjusting the trimmer for that range. The VFO coils and trimmers are accessable by removing the bottom cover of the unit.

DIAL SET

A dial-set has been provided so that dial adjustment can be made at any 100 kc point of the dial. With calibrator on, set the dial to any 100 kc point closest to the frequency you wish to work. Now adjust dial-set control to zero-beat the VFO with the 100 kc Calibrator. This provides greater accuracy of dial read-out.

POSITION:

The "X" position is provided for possible installation of an additional tuning range. For example: a coil can be installed for one of the W WV frequencies.

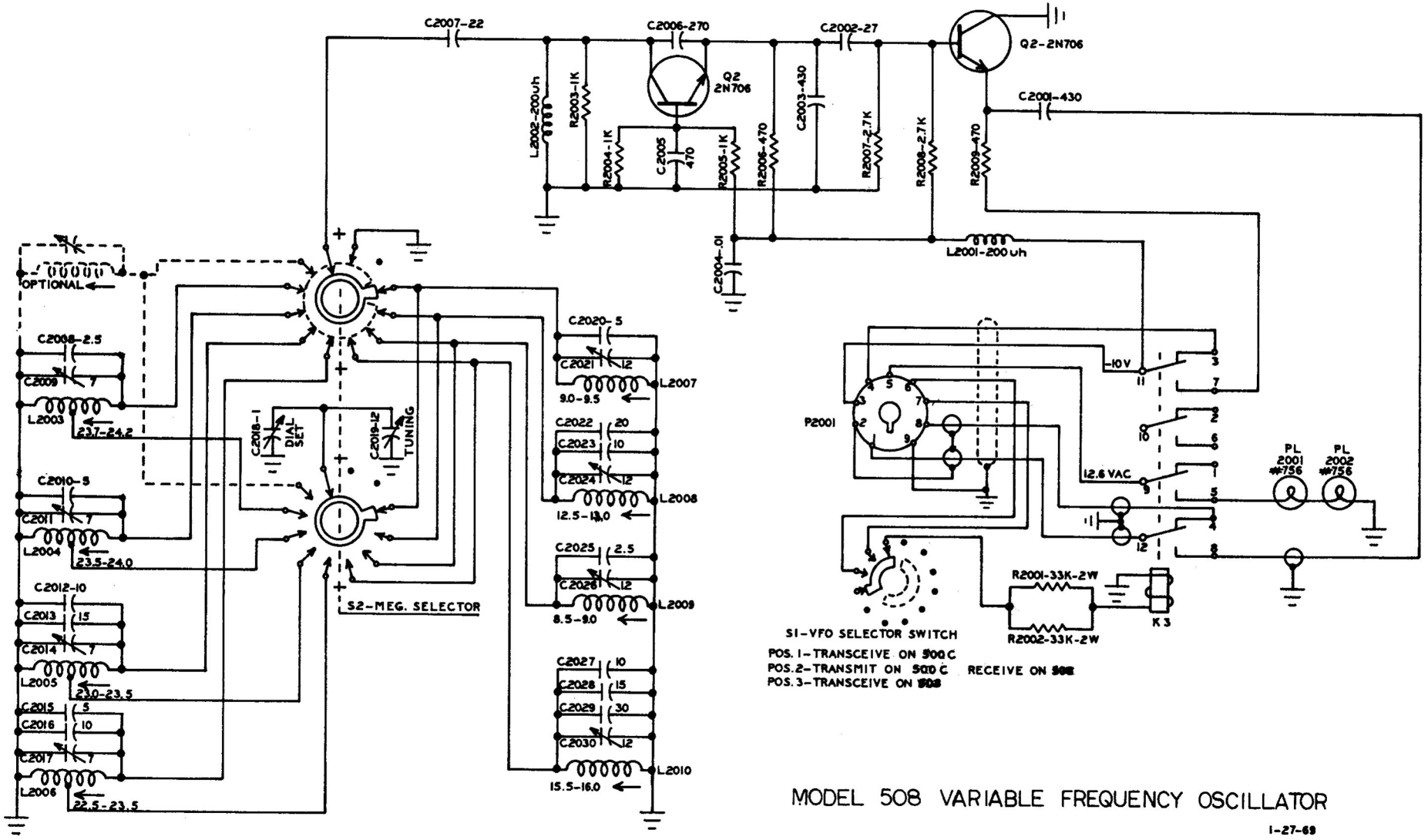

MODEL 508 VARIABLE FREQUENCY OSCILLATOR

1-27-69

500-C POWER SUPPLIES AND COMBINATIONS

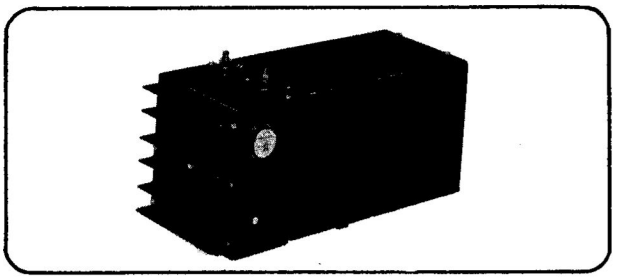

COMPLETE 12 VOLT D.C. SUPPLY

MODEL 14-117

Consists of a 117-X A.C. supply and a 14-C D.C. Converter. For 12-13.5 volt mobile or portable operation. Includes 8 ft. cable and plug pre-wired for connection to transceiver, primary cables, circuit breaker, and mounting hardware. 5 in. wide, 5 in. high, 12-1/4 in. long. Weight: 16-1/2 lbs.
Net Price. $130

MODEL 14-230. Same as above but with 230-X A.C. unit. Net Price. $140

Model 14-117 and 14-230 D.C. supplies will operate on A.C. input by detaching the 14-C unit and attaching an A.C. line cord, thus providing added versatility. 117 volt and 230 volt A.C. line cords available at $8 each.

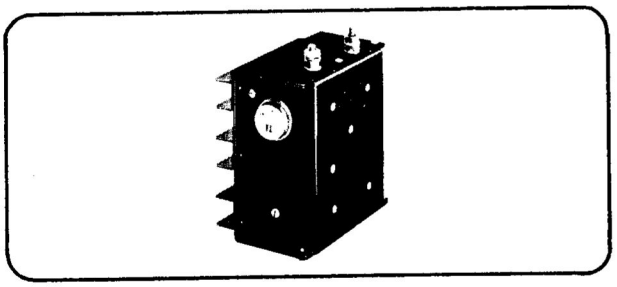

D.C. CONVERTER MODULE

MODEL 14-C

Transistorized Unit attaches to 117-X or 230-X power supply, converting them to 12-13.5 volt D.C. input for mobile or portable operation. For negative ground systems. Includes cables, plugs, circuit breaker, and mounting hardware. Average current drain: 9 amps. receive. 22 amps. transmit.
Dimensions: 5 x 5 x 3-1/2 in. Weight: 2-1/2 lbs.
Net Price: $65

MODEL 14-CP. Same as above but for positive ground system. Available on special order. . . .$75

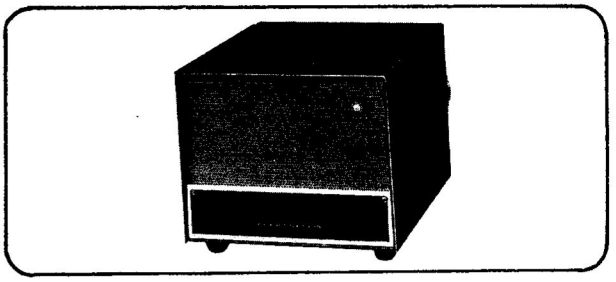

COMPLETE MATCHING A.C. SUPPLY

MODEL 117-XC

Consists of a 117-X power supply in a cabinet which matches Swan transceiver. Includes speaker, phone jack, and indicator light. Come with A.C. line cord, and power cable ready to plug into transceiver. 8 in. wide, 5-1/4 in. high, 11 in. deep.
Weight: 21 lbs. Net Price:. $105

MODEL 230-XC. Same as above but with 230-X supply for dual 117 or 230 volt A.C. input. Comes with 230 volt line cord, unless otherwise specified.
Net Price: $115

Model 117-XC and 230-XC A.C. supplies will operate on 12-13.5 volts D.C. input by attaching a 14-C Converter Unit in place of the A.C. line cord, thus providing added versatility for portable or emergency operation from a 12 volt battery.

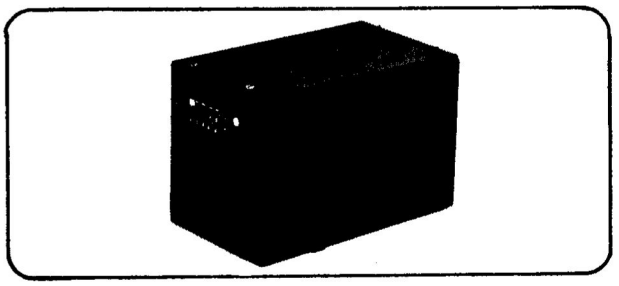

BASIC A.C. POWER SUPPLY

MODEL 117-X

Operates with 117 volts, 50-60 cycle input. Supplies all voltages required to operate Swan transceiver. Does not include matching cabinet, speaker or cables. Average power consumption: 125 watts, receive; 325 watts, transmit.
Dimensions: 5 x 5 x 8-3/4 in. Weight: 14 lbs.
Net Price: $65

MODEL 230-X. Same as above but with dual primary winding for either 117 or 230 volt 50-60 cycle input. $75

A.C. line cords for above supplies, with fuse, ready to plug in. Specify for 117 or 230 volts, each. . .$8

8 ft. 10 conductor cable with pre-wired plug for connecting A.C. supply to transceiver, each. $6

GENERAL DESCRIPTION:

The Swan Power Supply systems are designed to provide all necessary voltages required by Swan Transceiver models 240, 250, 350, 350-C, 500 and 500-C. This also includes the 300 Series and 400 Series commercial models. The model 117-X basic A.C. supply is designed for an input of 117 volts at 50 or 60 cycles. The model 230-X is identical except that it operates with 230 volts AC input. By simply changing line cords, it will also operate on 117 volts A.C.

For fixed station use, the 117-X or 230-X is installed in a cabinet which matches the Swan transceivers. This cabinet also contains a speaker, phone jack, and indicator light. The complete combination is designated as model 117-XC or 230-XC. The A.C. line cord plugs into the back of the supply. In the 230-XC, choice of 117 or 230 volts input is made by selecting line cords.

12 VOLT D.C. OPERATION:

A D.C. Converter attaches to the back of the A.C. supply, and converts it for 12-13.5 volts D.C. input. The model 14-C D.C. Converter is for negative ground systems, the most common type. (For positive ground systems, the model 14-CP D.C. converter is available on special order.) Combination of an A.C. supply with a 14-C Converter is designated as model 14-117 or 14-230 depending on which A.C. supply is used. The positive ground models are designated as model 14P-117 or 14P-230.

With the versatility of this power supply design, a number of advantages become apparent. The 14-117 mobile supply may be operated from a 117 volt A.C. line by detaching the D.C. Converter and plugging in an A.C. line cord.

The matching A.C. supply, model 117-XC or 230-XC, may be converted easily to 12-13.5 volts input by attaching the 14-C D.C. converter to the back. This provides for portable or emergency operation from a 12 volt battery. There may also be times when it will be desirable to operate temporarily in an automobile, such as during a vacation trip, field day, or emergencies. The 117-XC can be set on the floor or front seat, and with the 14-C attached it becomes a 12-volt power supply, complete with speaker.

SPECIFICATIONS:

Power Rating: 250 watts average, 600 watts peak.
Input:
Model 117-X: 117 volts nominal, 50-60 cycles.
Model 230-X: 230 volts or 117 volts, 50-60 cycles.
Model 14-C: 13.5 volts D.C. nominal, 40 amps. peak.

SWAN MODEL 14-C D.C. CONVERTER FIG. 1

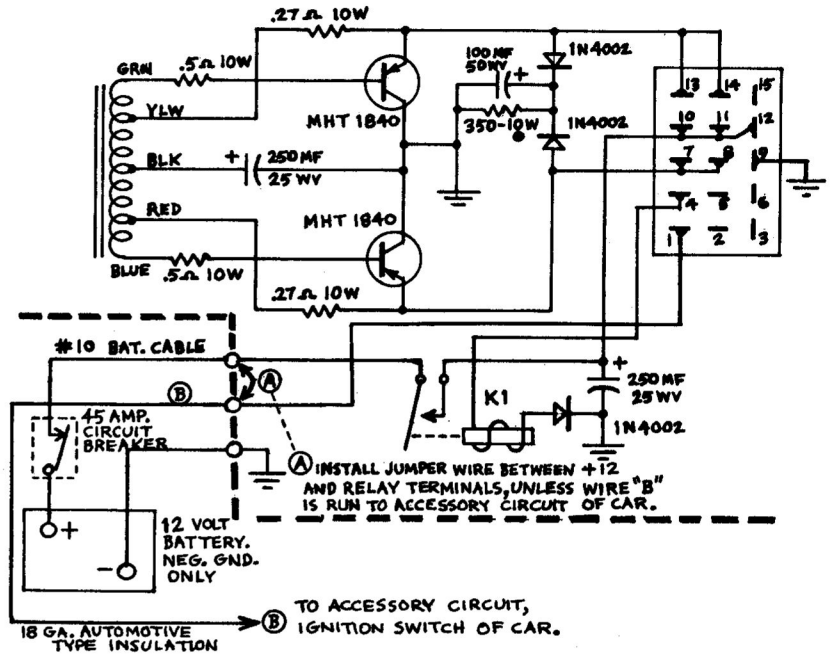

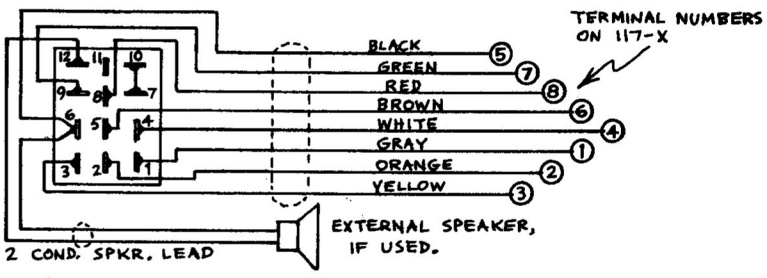

FIG. 2 PREWIRED PLUG AND CABLE, SUPPLIED WITH 14-C

Output:
800 volts at 250 ma. average, 700 ma. peak.
275 volts at 150 ma. continuous.
110 volts negative bias, at 100 ma.
12 volts D.C. at 200 ma., relay supply.
12.6 volts A.C. at 5.5 amps. (with A.C. input only)
Battery Drain with Swan Transceiver
Rec: 3.5 amps. Trans: 16 amps. average, 40 amps. peak, plus 5.5 amps. for vacuum tube heaters.

The D.C. Converter uses two power transistors for switching in a flip-flop oscillator circuit. A large

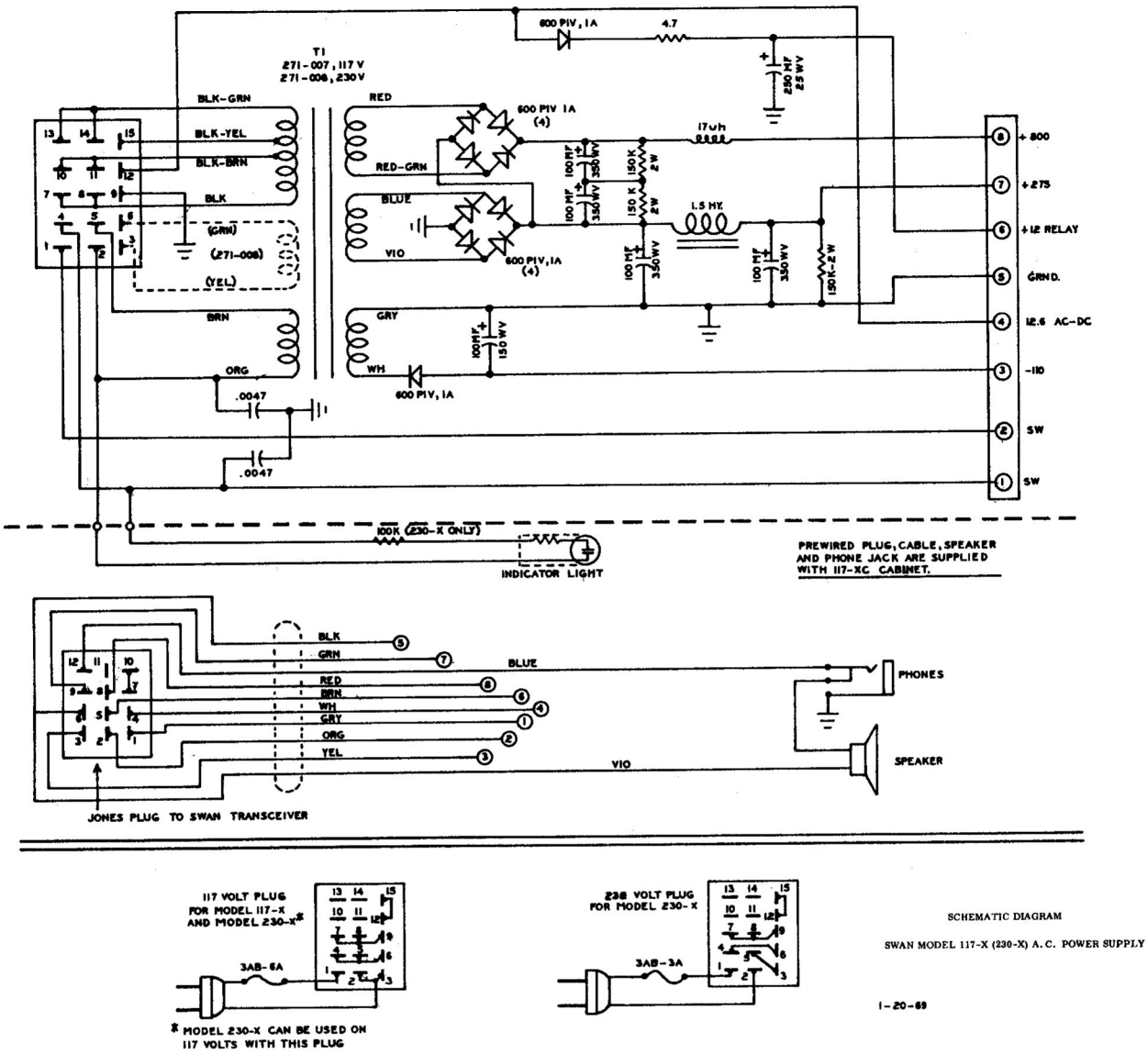

portion of the cost in this unit is in the transistors where no compromise has been made. They are rated at 60 amperes, with a 45 volt rating.

MATCHING CABINET:

Ordinarily the A.C. supply will be purchased complete in a matching cabinet as either model 117-XC or 230-XC. However, in some cases an owner may have purchased a 117-X or 230-X basic supply only, perhaps in a D.C. supply combination, and he may wish later on to mount it in a matching cabinet. For this purpose the cabinet with speaker and cables is available separately. The basic A.C. supply mounts inside with three screws, and the pre-wired cable connects as shown in the schematic. Connections to the phone jack and speaker have already been made. Two leads from the indicator light must be run through grommet and soldered to the terminals provided at the bottom of the supply. Refer to the schematic for clarification. The A.C. line cord is also provided with the matching cabinet kit. These line cords are available separately also, and come normally wired and stamped for 117 volts. 230 volt line cords are also available on special order, or the

117 volt line cord may easily be wired for 230 volts by referring to the schematic. Note that the 230 volt line cord will work only with the 230-X basic A.C. supply. The 117 volt line cord will work with either the 117-X or 230-X.

ELECTRICAL DESIGN:

Both the A.C. and D.C. sections are conservatively designed for long, reliable service with a minimum failure rate. At the same time, they are designed for easy access and servicing for those times when it is required. Any component can be readily checked out and replaced in a matter of moments. The D.C. Converter and A.C. supply can be detached quickly from one another and tested individually, thus isolating the source of trouble.

The A.C. supply is quite conventional, using a silicon rectifier bridge for the medium voltage, and another for high voltage. The 117-X has a single primary winding for 117 volt input, while the 230-X has a pair of primary windings which connect in parallel for 117 volts, and in series for 230 volts. The switching is taken care of in the A.C. line cord plug.

MOBILE INSTALLATION
Model 14-117 or 14-230.

12-13.5 volts D.C., Negative ground only. (For positive ground systems, the D.C. converter unit must be a model 14-CP, available from your dealer on special order.)

(A) **Preliminary Steps.** The D.C. electrical system in an automobile will sometimes generate high voltage transients. This can be caused by the starter motor, the alternator or generator, or loose wiring, and can represent a serious hazard to the transistors in your DC power supply. By selecting the best transistors available for the application, your Swan supply is capable of absorbing a good deal of abuse, but there is a limit to what even the best transistors can take and for this reason we strongly urge that you read the following notes completely, and follow them carefully. When this is done, you will find that your Swan power supply is extremely rugged and reliable. Field problems with the 14-117 supply are exceptionally low. But, first observe the following steps.

(1) Clean and tighten the battery terminals and clamps.

(2) Tighten battery cables where they attach to the starter solenoid and engine block.

(3) Inspect battery cables for corrosion or wear. Replace them if they look questionable.

(4) Check battery condition frequently. If the cells do not hold a similar charge or water level, replace the battery.

(5) Check alternator, (or generator), and regulator connections for tightness. Also, primary ignition wiring, horn wiring, lights, etc.

(6) Measure the charging voltage from the alternator. Often the regulator is misadjusted, and the voltage setting may be excessive. It should not read more than 14.5 volts at normal engine speeds.

(B) Locate the power supply under the hood in a reasonably clear spot as close to the battery as is practical, and away from the engine. Particularly, keep it clear of the engine manifold, and away from the high tension ignition wiring. On many cars there will be a good spot at the front and to one side of the radiator. The power supply may mount in any position, and is quite well protected against normal splashing and dirt. The 117-X unit attaches to the car with three sheet metal screws. Remove the 117-X cover, and locate the three mounting holes. The 14-C Converter attaches to the 117-X with the long machine screw.

In some cars it may be impossible to find room enough under the hood for the 14-117 assembly. If necessary, the 14-C and 117-X units can be separated 2 or 3 feet, and connected electrically with appropriate Jones plugs. 10 gauge wire is then required between terminals.

In other cases, it may be advantageous to install the 14-117 under the dash, or in the trunk of the car. Heavy battery leads with adequate automotive type insulation must be used. For trunk mounting, at least 6 gauge cables are recommended. In all installations the circuit breaker must be mounted close to the battery. Never run a long cable from the hot battery terminal to the power supply without a fuse or circuit breaker close to the battery. Failure to observe this rule will result in a serious fire hazard!

(C) Connect a cable from the hot battery terminal to the circuit breaker, keeping this cable as short and direct as possible. Then connect a cable from the circuit breaker to the +12 post on the 14-C converter unit. Next, connect a cable from the negative post of the 14-C unit to the ground terminal of the battery. If possible, drill and tap a hole in the battery post for a contact stud. The more directly the cables are connected to the battery, the less chance there will be for voltage transients to reach the transistors.

(D) Run the 10 conductor power cable from the transceiver to the power supply and connect by color code as illustrated in the schematic diagram

(E) There are two ways of wiring the relay circuit in the 14-C converter. The simplest method is to connect a wire jumper from the relay terminal post to the +12 terminal on the 14-C. These posts are just an inch apart, and an 18 gauge bare jumper is sufficient. However, when connected this way, it will be possible for anyone to turn on the transceiver at any time, and for the transceiver to be accidentally left on, running the battery down.

The second wiring method provides for connection to the accessory circuits of the car, so that the ignition key is required in order to turn on the transceiver. To do this an 18 gauge insulated wire must be run from the 14-C relay terminal to the accessory circuit under the dash of the car. This wire may be run alongside the 10 conductor power cable which goes to the transceiver. The accessory circuit will be found on one terminal of the ignition switch. Your service garage can be helpful in locating this. Otherwise, it may be easier to locate the 12 volt input line to the car radio, and splice into this line. Since the 14-C relay draws very little current, tapping into the car radio line will not matter, regardless of which side the car radio fuse is on.

(F) **Speaker Connections.** The two conductor lead coming from the Jones plug goes to an external speaker with 3 to 4 ohm voice coil. This speaker may be one already installed in the dash of the car or under the dash, and a selector switch may be installed to switch the speaker over from the car radio to the transceiver. An easier arrangement, however, is to install a 3 x 5 in. speaker inside the transceiver. The 500-C provides a mounting place on the left side, with terminal lugs on top of the chassis for connection to the speaker. One side of the speaker voice coil connects to the insulated terminal, and the other side connects to the ground terminal.

VOLTAGE REGULATION, MOBILE OPERATION

In D.C. to D.C. converters designed for mobile operation of Transceivers, it is important to note that output voltages will be related directly to the D.C. input voltage. The Swan model 14-117 supply is designed so that when input voltage is 13.5 volts, output voltages will be at nominal ratings, the same as with 117 volts A.C. input. Therefore, when Transceiver Tuning is performed without the engine running, it must be recognized that operating voltages will be considerably lower than normal, and meter readings will be less than with the engine running. In some cases, input voltage without the engine running may be as low as 11.5 volts, resulting in still lower meter readings. If the D.C. supply were designed to deliver normal output voltages at 11.5 or 12 volts input, then they would be dangerously high with the engine running.

The wire size and length of run from the battery to the 14-C converter is also an important factor governing output voltage from the power supply. The voltage drop across these leads should be kept reasonably small. 10 gauge wire is supplied with the 14-C converter, and is heavy enough for average runs of 3 to 4 feet. For longer runs it would be advisable to use 8 gauge, while for trunk mounted power supplies 6 gauge or even 4 gauge is recommended. It should be noted, however, that the really important factor in determining wire size is how much input voltage is delivered to the 14-C module during average voice modulation, when some 16 to 18 amperes are being drawn through the wire. In TUNE position considerably more current is drawn, as much as 35 to 40 amperes, and the voltage drop may be quite high. However, this is not a particular handicap; in fact, there is a definite safety factor in having a rather poorly regulated input which drops when you switch to TUNE. There is no reason to be unduly concerned about this drop, since the electrolytic capacitors in the power supply have ample storage capacity to provide good dynamic regulation during voice modulation.

To summarize: The best way of determining if the battery leads are large enough is to measure input voltage at the 14-C terminals while voice modulating. If the voltage drops less than 1/2 volt when speaking normally into the microphone, the leads are heavy enough. If the drop is more than 1/2 volt, the leads should be larger. Finally, do not expect full operating power unless the engine is running, and the generator is charging properly.

POWER SUPPLY WARRANTY POLICY

The normal guarantee on your Swan power supply is for a period of 90 days from date of purchase, and covers all components, material and workmanship. In the case of transistor failure, however, the warranty on them will be void if inspection proves that high transient voltages from the automobile were responsible. We will do all in our power to be fair and just in this determination. The warranty card must be filled out and mailed to the factory within 10 days from date of purchase. Do not ship a unit to the factory for servicing without prior authorization. Check with your dealer first, as he may be in a position to handle the service work more quickly. This warranty is void if the equipment has been misused or damaged.

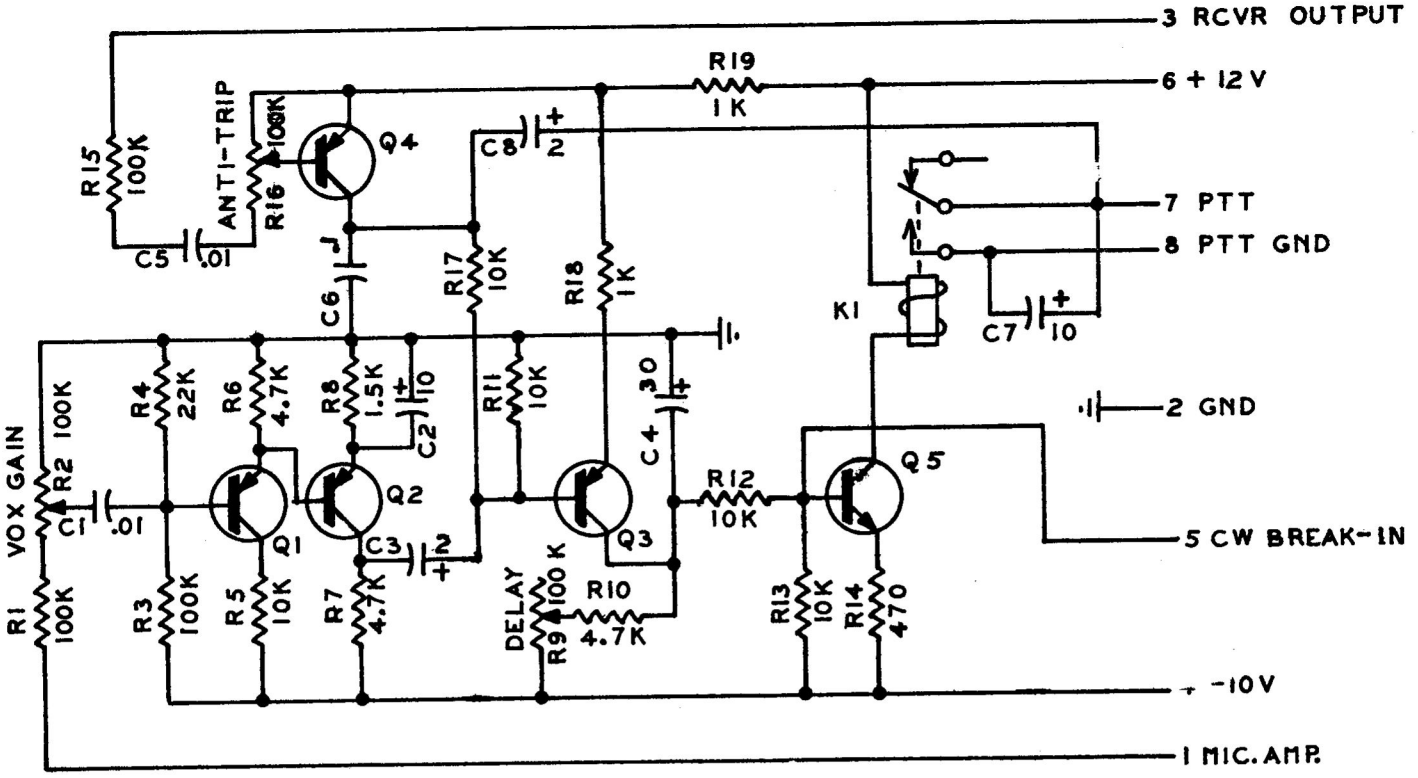

FIG. 9 SWAN VOICE CONTROL TRANSMIT ACCESSORY

1-15-68

PLUG IN VOX AND BREAK-IN CW ACCESSORY, MODEL VX-2

OPERATING INSTRUCTIONS

1. Place the VOX-PTT switch in the PTT position and adjust the transceiver for normal push-to-talk operation.
2. Plug in the VX-2 and rotate the VOX GAIN, ANTI-VOX, and DELAY controls fully counter-clockwise. Attach the top of the VX-2 to the 500C back with a 6-32 screw.
3. Rotate the transceiver MIC. GAIN fully counter-clockwise. This will prevent audio from being transmitted but will not affect VX-2 during initial adjustments.
4. Place the VOX-PTT switch in the VOX position.
5. While speaking into the microphone in a normal manner, slowly rotate the VOX GAIN control clockwise until the VX-2 keys the transmitter. Do not use more VOX GAIN than necessary to assure positive operation at normal voice levels.
6. Increase the receiver gain until receive signals are at a normal volume level. These signals will trip the VOX when picked up by the microphone.
7. With the microphone held in the normal operating position, very slowly increase the ANTI-VOX until received signals do not trip the VOX.

   NOTE: Excessive ANTI-VOX gain will cause received signals to gate the VX-2 off so that no amount of sound at the microphone will key the transmitter. Satisfactory balance between the VOX GAIN and ANTI-VOX is easily obtained when the microphone is at least a foot from the speaker.

8. Adjust the DELAY control to hold the transmitter keyed for the desired interval after you stop talking.

   NOTE: A little experimenting on the air will reveal that only a small portion of the first spoken syllable is lost when the VX-2 is actuated. Short DELAY settings will result in most efficient operation. See page 12 (CW OPERATION), for Semi-Break-In instructions.

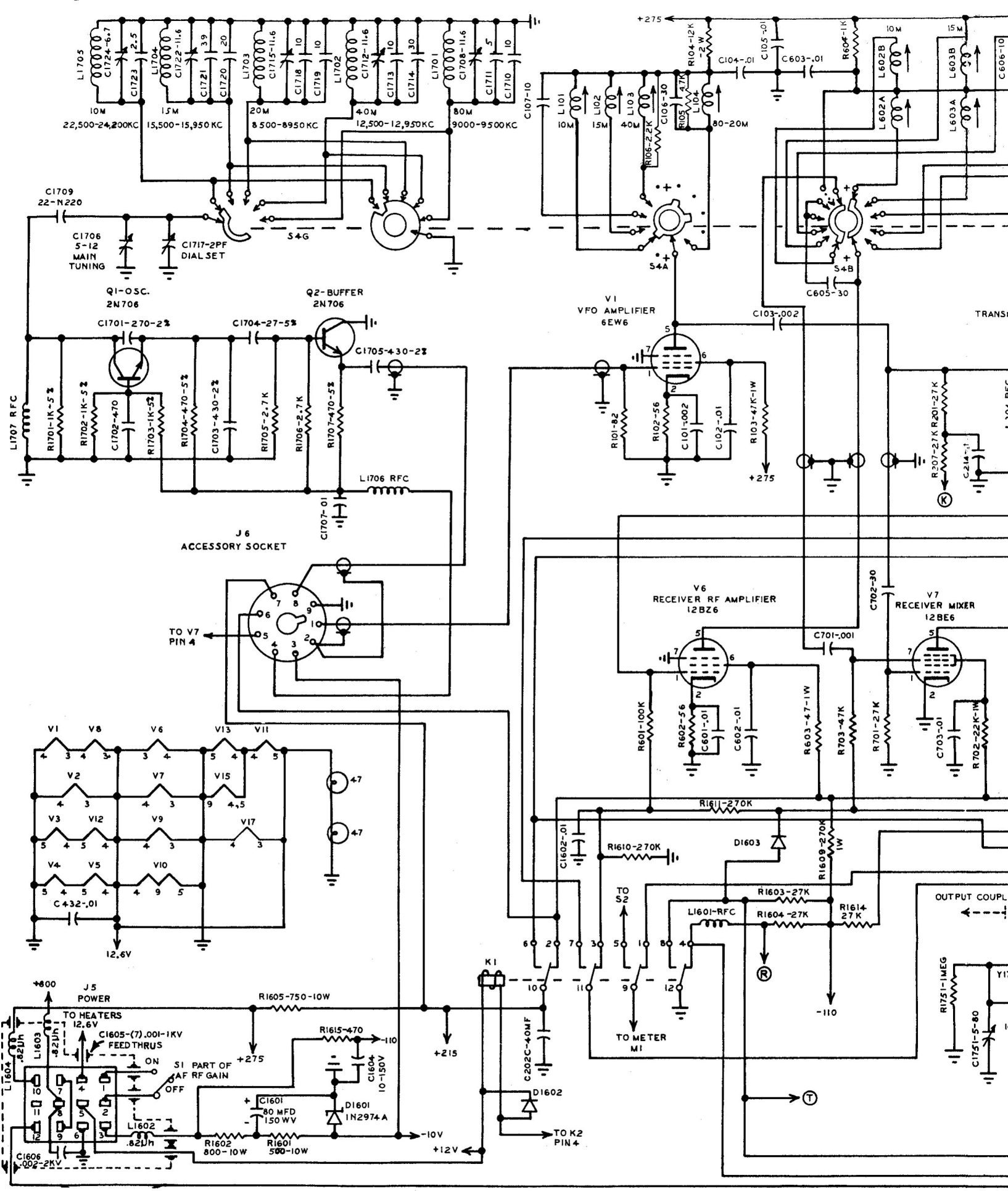
10M 22,500-24,200KC
15M 15,500-15,950 KC
20M 8500-8950 KC
40M 12,500-12,950KC
80M 9000-9500KC
C1709 22-N220
C1706 5-12 MAIN TUNING
C1717-2PF DIAL SET
S4G
Q1-OSC. 2N706
Q2-BUFFER 2N706
C1701-270-2%
C1704-27-5%
C1705-430-2%
L1707 RFC
L1706 RFC
C1707-01
J6 ACCESSORY SOCKET
TO V7 PIN 4
V1 VFO AMPLIFIER 6EW6
S4A
S4B
C605-30
C103-.002
V6 RECEIVER RF AMPLIFIER 12BZ6
V7 RECEIVER MIXER 12BE6
C702-30
C701-.001
R1611-270K
R1610-270K
D1603
R1609-270K 1W
TO S2
R1603-27K
L1601-RFC
R1604-27K
R1614 27K
OUTPUT COUPL
TO METER M1
K1
C202C-40MF
D1602
TO K2 PIN 4
J5 POWER
TO HEATERS 12.6V
C1605-(7).001-1KV FEED THRUS
S1 PART OF AF RF GAIN
ON
OFF
R1605-750-10W
R1615-470
C1604 10-150V
C1601 80 MFD 150 WV
D1601 1N2974A
R1602 800-10W
R1601 500-10W
L1602 .82µh
C1606 .002-2KV
+800
+275
+215
-110
-10V
+12V
12.6V
C432-.01
R1751-1MEG
C1751-5-80

E 1-27-69

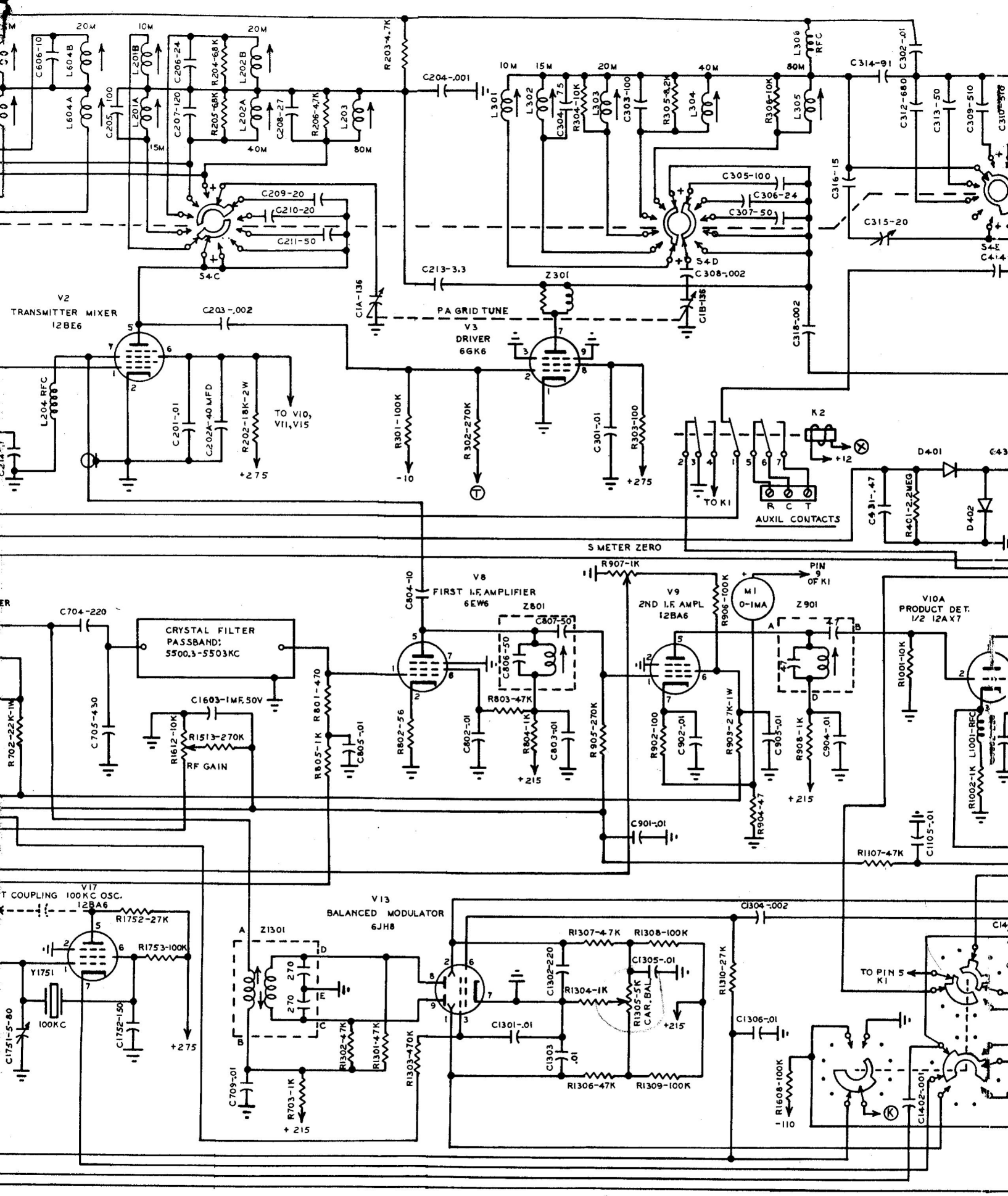
V2
TRANSMITTER MIXER
12BE6
V3
DRIVER
6GK6
PA GRID TUNE
S4C
S4D
S4E
Z301
TO V10, V11, V15
+275
-10
+12
K2
TO K1
R C T
AUXIL CONTACTS
S METER ZERO
V8
FIRST I.F. AMPLIFIER
6EW6
Z801
V9
2ND I.F. AMPL
12BA6
M1
0-1MA
PIN 9 OF K1
Z901
V10A
PRODUCT DET.
1/2 12AX7
CRYSTAL FILTER
PASSBAND:
5500.3-5503KC
RF GAIN
+215
V17
100KC OSC.
12BA6
Y1751
100KC
V13
BALANCED MODULATOR
6JH8
Z1301
CAR. BAL.
TO PIN 5 K1
-110

SC

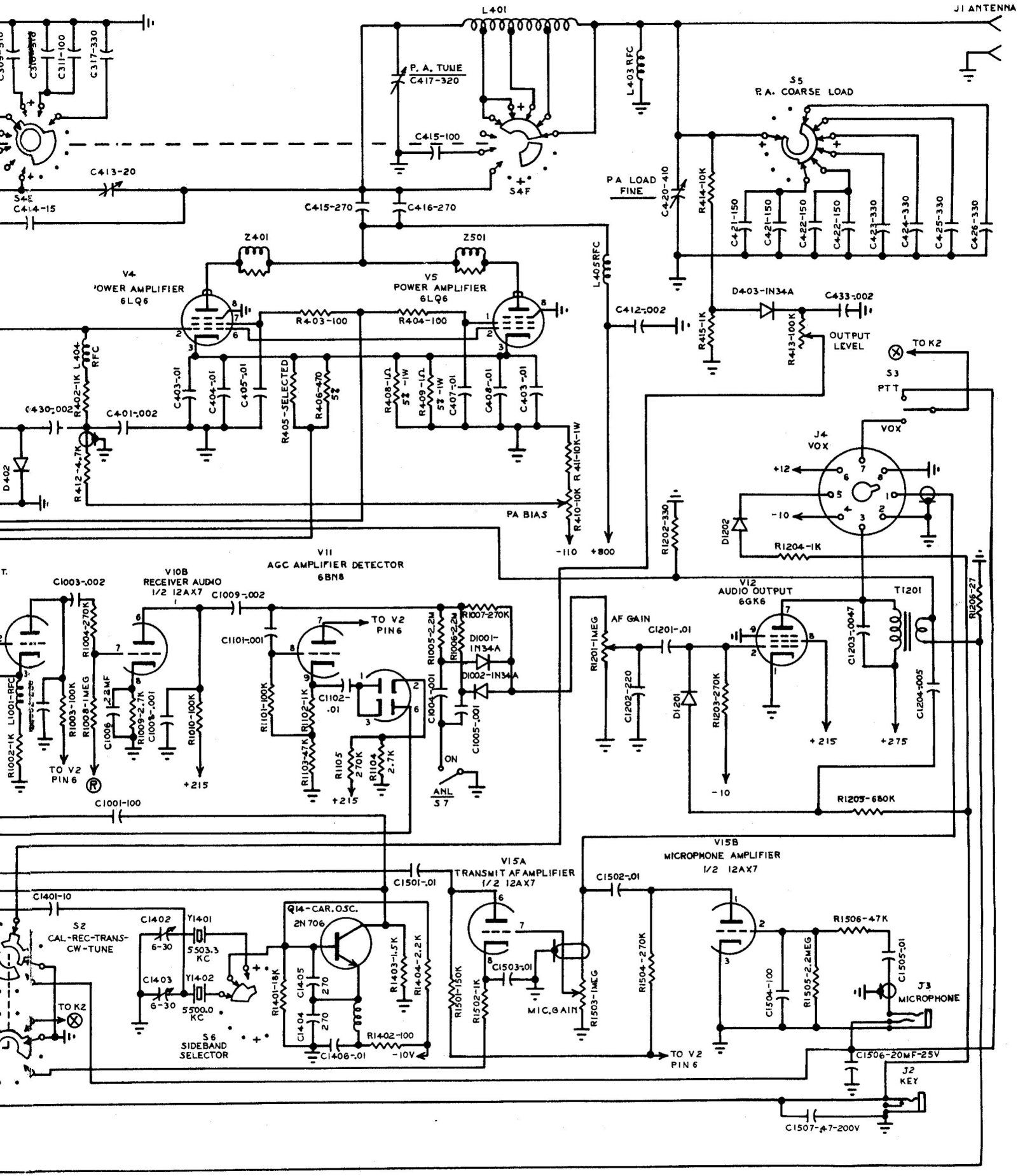

SCHEMATIC DIAGRAM - SWAN MODEL 500C SINGLE SIDEBAND TRANSCEIVER

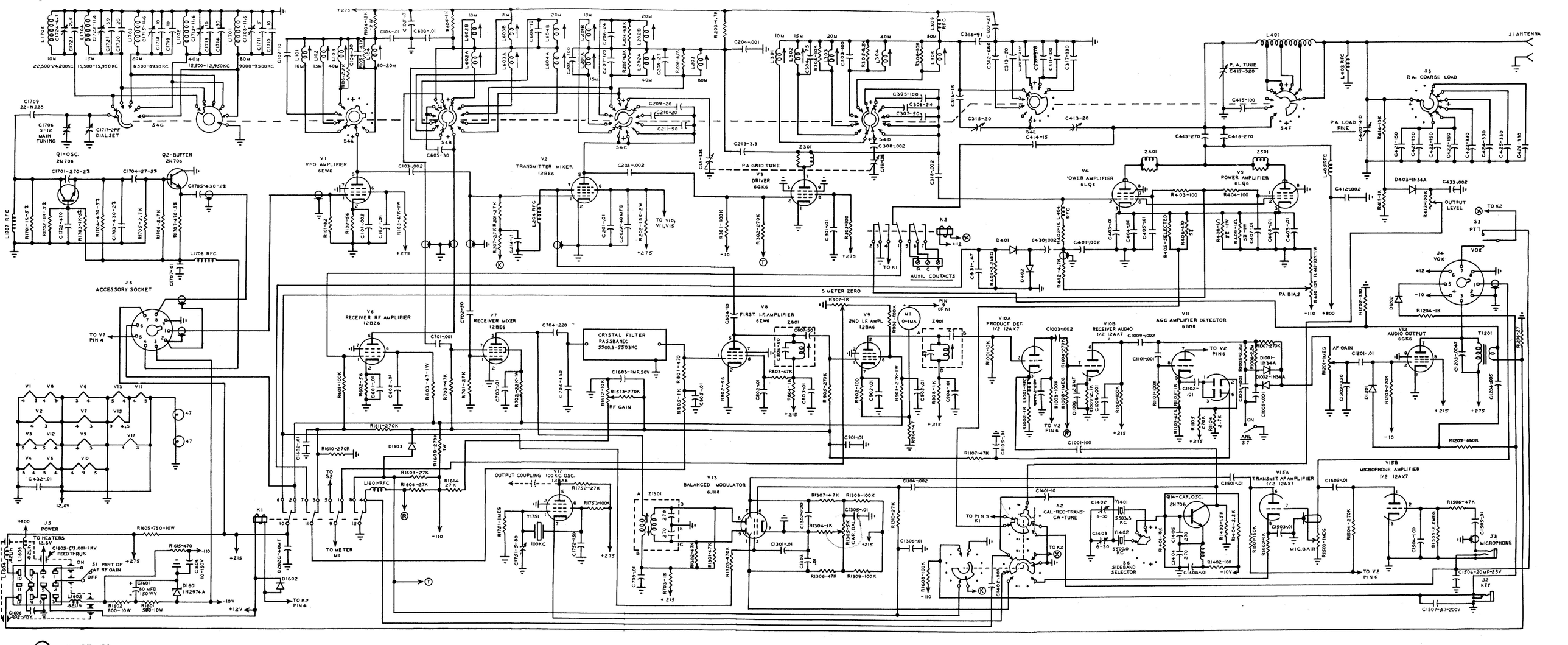

(E) 1-27-69

SCHEMATIC DIAGRAM - SWAN MODEL 500C SINGLE SIDEBAND TRANSCEIVER

WARRANTY POLICY

SWAN ELECTRONICS CORPORATION WARRANTS THIS EQUIPMENT AGAINST DEFECTS IN MATERIAL OR WORKMANSHIP, EXCEPT FOR TUBES, TRANSISTORS, AND DIODES, UNDER NORMAL SERVICE FOR A PERIOD OF ONE YEAR FROM DATE OF ORIGINAL PURCHASE. TUBES, TRANSISTORS, AND DIODES ARE COVERED UNDER THE WARRANTY POLICY FOR A PERIOD OF 90 DAYS. THIS WARRANTY IS VALID ONLY IF THE ENCLOSED CARD IS PROPERLY FILLED IN AND MAILED TO THE FACTORY WITHIN TEN DAYS OF DATE OF PURCHASE. DO NOT SHIP TO THE FACTORY WITHOUT PRIOR AUTHORIZATION. THIS WARRANTY IS LIMITED TO REPAIRING OR REPLACING ONLY THE DEFECTIVE PARTS, AND IS NOT VALID IF THE EQUIPMENT HAS BEEN TAMPERED WITH, MISUSED OR DAMAGED.