hallicrafters

OPERATING AND SERVICE INSTRUCTIONS

COMMUNICATIONS TRANSCEIVER MODEL SR-2000

ERRATA SHEET

MODEL SR-2000

Prior to production, but after the Instruction Manual was printed, certain wiring and component changes were made in the Model SR-2000 Transceiver.

These changes are contained in the schematic diagram and parts list herein enclosed. Please discard the schematic diagram and parts list contained in the Instruction Manual and refer to those contained within this sheet whenever necessary.

Also change pages 17 and 38 as shown below.

On page 17, the PLATE AND LOAD CONTROL SETTINGS FOR 50-OHM LOAD chart, change as follows:

For a frequency of 7.0 MC the nominal PLATE control setting should be changed from 3 to 7.

On page 38, add the following paragraph after paragraph L.

M. Set the BAND SELECTOR at 7.0, the OPERATION control at REC, and the VFO at 7250 KC. Tune the RF signal generator at 7250 KC for a 1000 CPS beat note and tune the PRESELECTOR control for maximum audio output. Use a low level output from the signal generator (approximately one microvolt) so that no AGC voltage is developed. Reset the signal generator frequency to 6250 KC and increase its output by approximately 60 DB. Adjust its frequency for a 1000 CPS beat note. Now adjust the 6.25 MC trap coil (L39) for minimum audio output.

Part Number 094-904488B
Pack with Instruction Manual
Part Number 094-904120

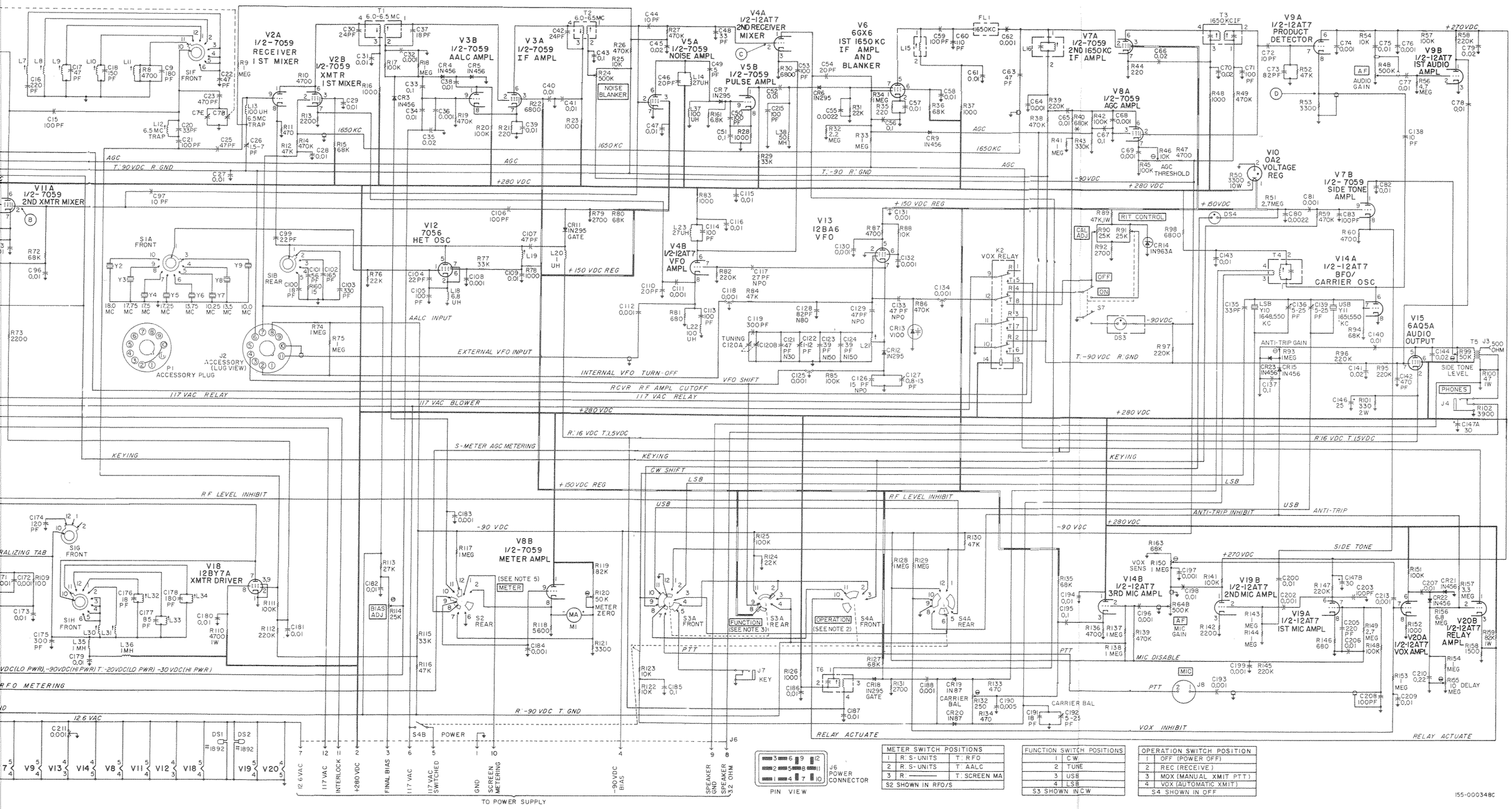

METER SWITCH POSITIONS		
1	R: S-UNITS	T: RFO
2	R: S-UNITS	T: AALC
3	R: ———	T: SCREEN MA
S2 SHOWN IN RFO/S		

FUNCTION SWITCH POSITIONS	
1	CW
2	TUNE
3	USB
4	LSB
S3 SHOWN IN CW	

OPERATION SWITCH POSITION	
1	OFF (POWER OFF)
2	REC (RECEIVE)
3	MOX (MANUAL XMIT PTT)
4	VOX (AUTOMATIC XMIT)
S4 SHOWN IN OFF	

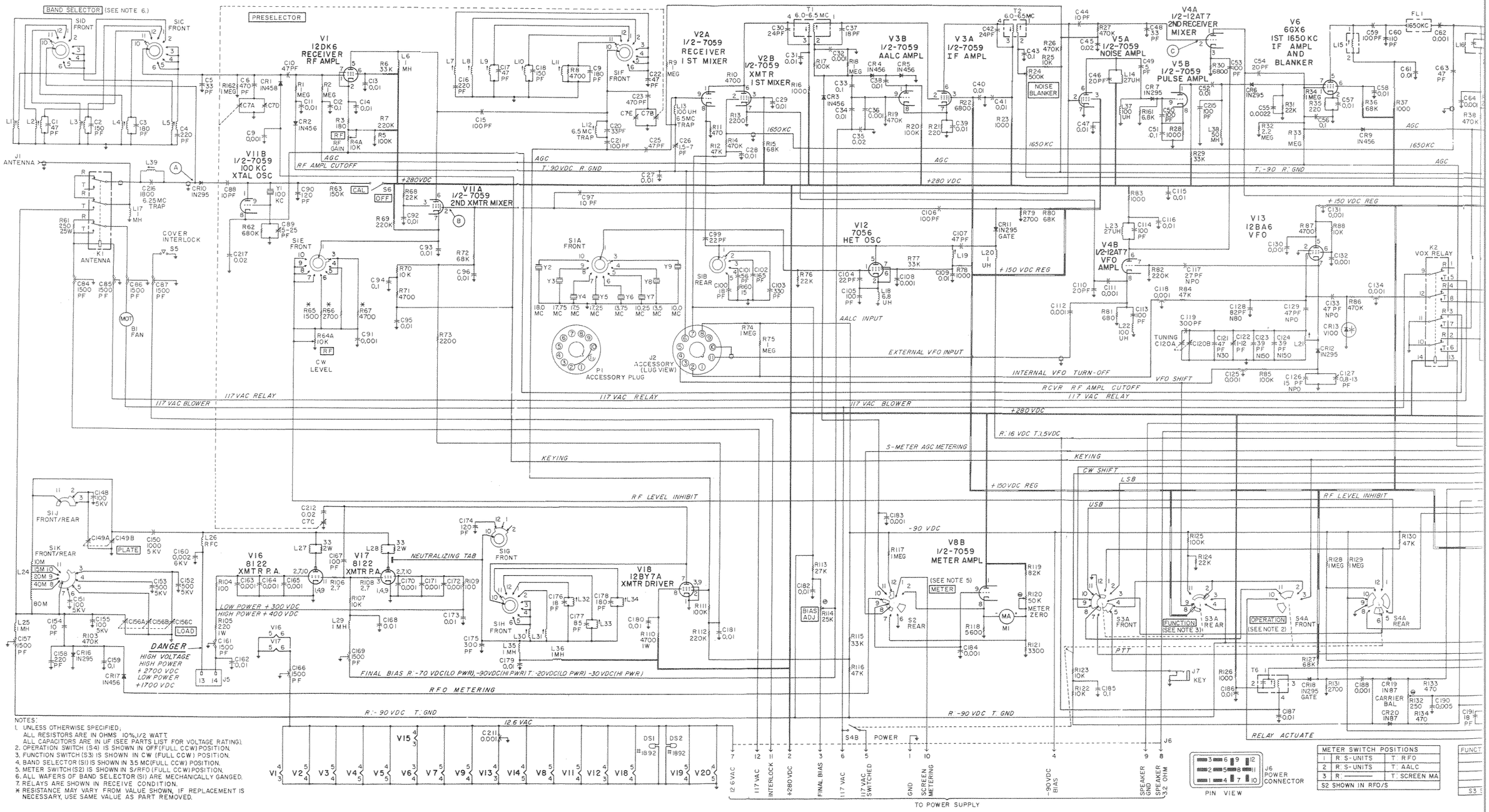

NOTES:

1. UNLESS OTHERWISE SPECIFIED;
   ALL RESISTORS ARE IN OHMS 10%, 1/2 WATT.
   ALL CAPACITORS ARE IN UF (SEE PARTS LIST FOR VOLTAGE RATING).
2. OPERATION SWITCH (S4) IS SHOWN IN OFF (FULL CCW) POSITION.
3. FUNCTION SWITCH (S3) IS SHOWN IN CW (FULL CCW) POSITION.
4. BAND SELECTOR (S1) IS SHOWN IN 3.5 MC (FULL CCW) POSITION.
5. METER SWITCH (S2) IS SHOWN IN S/RFO (FULL CCW) POSITION.
6. ALL WAFERS OF BAND SELECTOR (S1) ARE MECHANICALLY GANGED.
7. RELAYS ARE SHOWN IN RECEIVE CONDITION.

* RESISTANCE MAY VARY FROM VALUE SHOWN, IF REPLACEMENT IS NECESSARY, USE SAME VALUE AS PART REMOVED.

MODEL SR-2000 SERVICE REPAIR PARTS LIST

Schematic Symbol	Description	Hallicrafters Part Number
	CAPACITORS	
C1,17,22	47 PF, 5%, 500V, Mica	493-110470-233
C2,18	150 PF, 5%, 500V, Mica	493-110151-234
C3,19,178	180 PF, 5%, 500V, Mica	493-110181-234
C4,16	220 PF, 5%, 500V, Mica	493-110221-234
C5,20	33 PF, 5%, 500V, Mica	493-110330-233
C6,23,142	470 PF, 10%, 500V, Mica	493-110471-134
C7A,B,C, D,E	Variable, PRE-SELECTOR	048-000526
C9,32,36, 62,64, 68,69,74,76, 81,91,108,111,112,130, 132,163,164,165,170, 171, 172,183,184,188, 193,196,197,199,202, 213	0.001 μF, 20%, 500V, Ceramic	047-001671
C10,25,63, 107	47 PF, 10%, 500V, Mica	493-110470-133
C11,13,14, 27,28,29, 31,34,38,39, 40,41,47,52,57,58,61,65,75, 77,78,82,92,93,95,96,109, 115,116,140,143,162,168, 173,179,180,181,182,186, 187,194,200,206,207, 209,198	0.01 μF, 20%, 500V, Ceramic	047-100354
C12,33,43, 51,56,67,159	0.1 μF, +80%, -20%, 100V, Ceramic	047-001428
C15,21,50, 53,59,71,83, 105,106,113, 114,167,203, 208,215	100 PF, 10%, 500V, Mica	493-110101-134
C26	Variable, 1.5 PF - 7 PF	044-100457
C30,42	24 PF, 10%, 500V, Mica	493-110240-131
C35,45,66 70,79, 141,144,145, 212,217	0.02 μF, +80%, -20%, 500V, Ceramic	047-100242
C37,191	18PF, 10%, 500V, Mica	493-110180-131
C44,72,88, 97,138,154	10 PF, ±0.5 PF, 500V, Mica	493-110100-531
C46,54, 110	20 PF, 10%, 500V, Mica	493-110200-131
C48	33 PF, 10%, 500V, Mica	493-110330-133
C49	5 PF, ±0.5 PF, 500V, Mica	493-110050-531
C60	110 PF, 10%, 500V, Mica	493-110111-134
C73	82 PF, 10%, 500V, Mica	493-110820-134
C55,80	0.0022 μF, 10%, 600V, Paper	046-001434-304
C84,85,86, 87,157,161, 166,169	1500 PF, Feed-Thru	047-100602
C89,136, 139,192	Variable, 5 PF-25 PF, Trimmer	044-100473
C90	120 PF, 10%, 500V, Mica	493-110121-134
C94,185, 137,195	0.1 μF, 10%, 200V, Paper	046-001294-004
C99	22 PF, 5%, 500V, Mica	493-110220-231
C100,176	18 PF, 5%, 500V, Mica	493-110180-231
C101	56 PF, 5%, 500V, Mica	493-110560-233
C102	165 PF, 5%, 500V, Mica	493-121650-234
C103	330 PF, 5%, 500V, Mica	493-110331-234
C104	22 PF, 10%, 500V, Mica	493-110220-131
C117	27 PF, 5%, 500V, NPO, Ceramic	491-005270-022
C118,125, 131,134, 211	0.001 μF, GMV, Feed-thru	047-001308
C119	300 PF, 2%, 300V, Mica	493-110301-324
C120A,B	Variable, Tuning	048-000597
C121	47 PF, 5%, 500V, N30, Ceramic	491-025470-031
C122	Variable, 1.0 PF-12PF, Trimmer	044-000643
C216	1800 PF, 10%, 300V, Mica	493-310182-124

Schematic Symbol	Description	Hallicrafters Part Number
	CAPACITORS (CONT).	
C123,124	39 PF, 5%, 500V, N150, Ceramic	491-005390-05
C126	15 PF, 5%, 500V, NPO, Ceramic	491-005150-02
C127	Variable, 0.8 PF-13.0 PF, Piston Trimmer	044-000520
C128	82 PF, 5%, 500V, N80, Ceramic	491-025820-042
C129,133	47 PF, 5%, 500V, NPO, Ceramic	491-025470-02
C135	33 PF, 5%, 100V, Mica	493-910330-21
C146	25μF, 25V, Electrolytic	045-001431
C147A,B	2 x 30 μF, 350V, Electrolytic	045-000903
C148,151, 155	100 PF, 10%, 5KV, Ceramic	047-001924
C149A,B	Variable, PLATE	048-00063
C150	1000 PF, 20%, 5 KV, Ceramic	047-200550
C152,153	500 PF, 20%, 5 KV, Ceramic	047-201084
C156A,B, C	Variable, LOAD	048-00062
C158,205	220 PF, 10%, 500V, Mica	493-110221-13
C160	0.002 μF, 20%, 6 KV Ceramic	047-101085
C174	120 PF, 5%, 500V, Mica	493-110121-23
C175	300 PF, 5%, 500V, Mica	493-110301-23
C177	85 PF, 5%, 500V, Mica	493-110850-23
C190	0.005 μF, 20%, 500V, Ceramic	047-100442
C210	0.22 μF, 10%, 200V, Paper	046-001298-00
	*RESISTORS	
R1,2,9,18, 33,34,41,74, 75,117,128, 129,137,138, 143,144,153, 154,162	1 Megohm	451-25210
R3	180 Ohm	451-25218
R4A,B and R64A,B	Variable, Dual, 500K and 10K, RF & AF	025-00206
R5,17,20, 42,45,57, 85,111,125, 141,148,151	100K Ohm	451-25210
R6,29,71, 115	33K Ohm	451-25233
R7,39,58, 69,82,95,96, 97,112, 145,147	220K Ohm	451-25222
R13,73,142	2200 Ohm	451-25222
R8,10,47, 60,67,71, 87,136	4700 Ohm	451-25247
R11,133 134	470 Ohm	451-25247
R12,52, 84,116,130	47K Ohm	451-25247
R14,19,26, 27,38,49,59, 86,103,139	470K Ohm	451-25247
R15,36, 72,80,94, 127,135,163	68K Ohm	451-25268
R16,23,28, 37,48,78,83 126,152	1000 Ohm	451-25210
R21,35,44	220 Ohm	451-25222
R22,30,98, 161	6800 Ohm	451-25268
R24	Variable, 500K Ohm, 30%, 1/8 Watt NOISE BLANKER	025-00269
R25,54,70, 88,107,122, 123	10K Ohm	451-25210
R102	3900 Ohm	451-25239
R32	2.2 Megohm	451-25222
R40,62	680K Ohm	451-25268
R43	330K Ohm	451-25233
R46	Variable, 10K Ohm, AGC Threshold	025-00233
R50	3300 Ohm, 10 Watt	445-03233
R51,149	2.7 Megohm	451-25227
R53,121	3300 Ohm	451-25233
R56	4.7 Megohm	451-25247

Schematic Symbol	Description	Hallicrafters Part Number
	*RESISTORS (CONT).	
R61	250 Ohm, 25 Watt, Wirewound	024-001629
R63	150K Ohm	451-252154
R65,158	1500 Ohm	451-252152
R66,79,92 131	2700 Ohm	451-252272
R31,68,76, 124	22K Ohm	451-252223
R81,146	680 Ohm	451-252681
R89	47K Ohm, 1 Watt	451-352473
R90	Variable, 25K Ohm, CAL ADJ	025-002509
R91	Variable, 25K Ohm, RIT, (includes S7)	025-002510
R93,150	Variable, 1 Megohm, 30%, 2/10 Watt, Anti-Trip Gain and VOX Sens.	025-002067
R99,120	Variable, 50K Ohm, 20%, 2/10 Watt, Sidetone Level and Meter Zero	025-002065
R100	47 Ohm, 1 Watt	451-352470
R101	330 Ohm, 2 Watt	451-652331
R104,109	100 Ohm	451-252101
R105	220 Ohm, 1 Watt	451-352221
R106,108	2.7 Ohm	451-252027
R110	4700 Ohm, 1 Watt	451-352472
R113	27K Ohm	451-252273
R114	Variable, 25K Ohm, 20%, 1/3 Watt, BIAS ADJ	025-002698
R118	5600 Ohm	451-252562
R119,159	82K Ohm, 1 Watt	451-352823
R132	Variable, 250 Ohm, 10%, 3/10 Watt, Carrier Bal.	025-002064
R155	Variable, 10 Megohm, 20%, 2/10 Watt, Delay	025-002066
R156	6.8 Megohm	451-252685
R157	3.3 Megohm	451-252335
R160	15 Ohm	451-252150

*All RESISTORS are carbon type, 10%, 1/2 watt unless otherwise stated.

Schematic Symbol	Description	Hallicrafters Part Number
	COILS AND TRANSFORMERS	
L1	Coil, Antenna, 15 Meter	050-003282
L2	Coil, Antenna, 20 Meter	051-003347
L3	Coil, Antenna, 40 Meter	051-003345
L4	Coil, Antenna, 80 Meter	051-003346
L5	Coil, Antenna, 10 Meter	051-003331
L6,17,20, 25,29,35,36	Choke, RF, 1.0 MH	053-000580
L7,30	Coil, RF, 10 Meter	051-003532
L8,31	Coil, RF, 15 Meter	051-003349
L9,32	Coil, RF, 20 Meter	051-003342
L10,33	Coil, RF, 40 Meter	051-003340
L11,34	Coil, RF, 80 Meter	051-003341
L12	Coil, RF Trap, 6-6.5 MC	050-001068
L13,22,37	Choke, RF, 100 μH	053-000644
L14,23	Choke, RF, 27 μH	053-000666
L15	Variable, Coil, 1650 KC	050-000801
L16	Coil, IF	050-002477
L18	Choke, RF, 6.8 μH	050-001245
L19	Coil, Heterodyne Osc.	050-002370
L21	Coil, VFO	050-002416
L24	Coil, Tank	050-002328
L26	Choke, RF	053-200426
L27,28	Choke, Parasitic	050-002220
T1,2	Transformer, IF Bandpass	050-001045
T3	Transformer, IF 1650 KC	050-000890
T4,6	Transformer, IF Bal. Mod.	050-000881
T5	Transformer, Audio Output	055-000508
L38	Choke, RF, 50 MH	050-001044-009
L39	Coil, 6.5 MC Trap	050-003467
	ELECTRON TUBES, DIODES, AND CRYSTALS	
V1	Tube, Type 12DK6	090-001660
V2,3,5,7,8, 11	Tube, Type 7059	090-001561
V4,9,14, 19,20	Tube, Type 12AT7	090-900034
V6	Tube, Type 6GX6	090-001639
V10	Tube, Type 0A2	090-900001
V12	Tube, Type 7056	090-001642
V13	Tube, Type 12BA6	090-900039
V15	Tube, Type 6AQ5A	090-901331
V16,17	Tube, Type 8122	090-001640
V18	Tube, Type 12BY7A	090-901192
CR1	Diode, Type 1N458	019-001930

Schematic Symbol	Description	Hallicrafters Part Number
	ELECTRON TUBES, DIODES, AND CRYSTALS	
CR2,3,4, 5,9,15,17, 21,22,23	Diode, Type 1N456	019-002964
CR6,7, 10,11,12, 16,18	Diode, Type 1N295	019-301980
CR13	Varicap, Type V100	048-000464
CR14	Diode, 12V Zener, Type 1N963A	019-003655
CR19,20	Diode, Type 1N87	019-002941
Y1	Crystal, 100.000 KC	019-002712
Y2	Crystal, 18.00 MC	019-003769-008
Y3	Crystal, 17.75 MC	019-003769-007
Y4	Crystal, 17.5 MC	019-003769-006
Y5	Crystal, 17.25 MC	019-003769-005
Y6	Crystal, 13.75 MC	019-003769-004
Y7	Crystal, 10.25 MC	019-003769-003
Y8	Crystal, 13.5 MC	019-003769-002
Y9	Crystal, 10 MC	019-003769-001
Y11	Crystal, 1651.550 KC	019-003681-002
Y10	Crystal, 1648.550 KC	019-003681-001
	CONNECTORS	
J1	Jack, Antenna Connector	010-100056
J2	Socket, 11-Pin, Accessory	006-200707
J3	Jack, Phono, 500 Ohm	036-100041
J4,7	Jack, Key and PHONES	036-200210
J5	Connector, High Voltage	035-000095
J6	Connector, Power, 12-Pin Jones Plug	010-002586
J8	Connector, MIC, W/hardware	010-101569
P1	Plug, 11-Pin, Accessory Plug	010-002932
	SWITCHES	
S1A,E	Wafer, RF and Heterodyne Osc	062-000266
S1B	Wafer, Osc. Plate	062-000263
S1C,D,F, H	Wafer, RF and Driver	062-000265
S1G	Wafer, PA Neut.	062-000264
S1J,K	Wafer, PA	060-002842
S2	Rotary, METER	060-002818
S3	Rotary, FUNCTION	060-002796
S4	Rotary, OPERATION (includes S4B, Power)	060-002795
S5	Pushbutton, Cover Interlock	060-002836
S6	Rotary, CAL	060-002794
	MISCELLANEOUS	
B1	Blower	020-000413
	Bracket, Blower	067-013082
	Bracket, Choke	067-013015
	Bracket, Coil Mounting (6)	067-203456
	Bracket, Esutcheon Mounting (2)	067-013109
	Bracket, Function Switch	067-012720
	Bracket, Gang Mounting	067-013016
	Bracket, Meter Mounting	067-012721
	Bracket, Meter Switch and Bias Adj. Pot.	067-013014
	Bracket, Pilot Light	067-013315
	Bracket, Pot. Mounting	067-012712
	Bracket, Preselector Shaft	067-013223
	Bracket, Spring Adjust	067-012607
	Bracket, Switch	067-010585
	Bracket, Switch Mounting	067-013083
	Cabinet Assembly	150-008949
	Cabinet Bottom Rivet Assembly	150-009577
	Cabinet Top Assembly	150-009578
	Cabinet, Weld Assembly	066-004580
	Coupling, Insulator (Green)	029-001061
	Coupling, Insulator (Yellow)	029-200564
	Cover, Air Box	066-004581
	Cover, Cabinet Bottom	066-004579

Schematic Symbol	Description	Hallicrafters Part Number
	MISCELLANEOUS (CONT).	
	Cover, Cabinet Top	066-004578
	Cover, Gang VFO	066-004434
	Cover, RF Shield	066-004584
	Escutechon	007-000903
FL1	Filter, Crystal	049-000324
	Foot, Rubber (4)	016-201072
	Front Panel Assembly	150-008948
	Gear, Dial	026-001173
	Gear, Idler	026-001170
	Gear, Idler Spur	026-001002
	Gear, Pinion	026-001171
	Gear, Pinion Drive	026-001166
	Gear, Spur	026-001089
	Gear, Spur, Dial Scale	026-001174
	Gear, Spur (Fixed)	026-001088
	Gear, Spur, Pinion Shaft	026-001172
	Handle, Knob	030-000793
	Housing, Air Box	066-004582
	Indicator, Light	086-000687
	Indicator, PRE-SELECTOR	082-000576-001
	Knob, CAL-ADJ and CAL-OFF	015-001755-002
	Knob, LOAD Tuning	015-001925
	Knob, Main Tuning	015-001617
	Knob, NOISE BLANKER and METER AALC	015-001775
	Knob; OPERATION, FUNCTION, and BAND SELECTOR	015-001760
	Knob, PLATE Tuning	015-001909
	Knob, PRE-SELECTOR	015-001752-001
	Knob; RF Gain, CW-Tune Level, and RIT CONTROL ON-OFF	015-001740-001
	Knob; RIT CONTROL, Mic Gain, and Audio Gain	015-001773
DS1,2	Lamp, Pilot, No. 1892	039-000797
DS3,4	Lamp, Neon, NE-2	039-100012
	Medallion	007-000850
M1	Meter (with hardware)	082-000683
	Plate, Gear	063-006830
	Plate, Front VFO	063-006821
	Plate, Idler Gear	063-006827
	Plate, Left Chassis	063-007021
	Plate, Pivot	063-006828
	Plate, Right Chassis	063-007022
	Plate, Top Gang Cover	063-006889
	Pulley (2)	028-200144
	Rear Panel Assembly	150-008955
K1	Relay, Antenna	021-000838
K2	Relay, VOX	021-000732
	Roller (2)	028-000550
	Shaft, BAND SELECTOR	074-003097
	Shaft, Cam	074-002997
	Shaft, Dial Gear	074-002996
	Shaft, PRE-SELECTOR	074-002756-003
	Shaft, PRE-SELECTOR (Outer)	074-002791-002
	Shaft, Tuning (Loading)	074-003083
	Shaft, Outer	074-003084
	Shield, Tube (V7,19)	069-201190
	Shield, Tube (V18)	069-001590
	Socket, 4-crystal	150-003281
	Socket, Dual crystal	006-000984
	Socket, Pilot Light Assembly	086-000741
	Socket, Relay	006-001184
	Socket, Single Crystal	006-100320
	Socket, Tube, 7-Pin (V1,6)	006-200947
	Socket, Tube, 9-Pin (V2, 3, 5, 11)	006-200947
	Socket, Tube, 9-Pin (V4,8,9, 14, 20)	006-001112
	Socket, Tube, 7-Pin (V6, 12, 13, 15)	006-001094
	Socket, Tube, 9-Pin (V7, 18, 19)	006-200395
	Socket, Tube, 11-Pin (V16,17)	006-001212
	Spring, Anti-Backlash	075-000841
	Spring, Cam	075-001007
	Spring, Dial Cord	075-100012
	Spring, Hold-down	075-001418
	Spring, Idler Follower	075-200610
	Spring, Pivot Plate	075-001008
	Stud, Switch	074-003096
	Window, Glass, KC	022-000747
	Window, Left Glass	022-000748
	Window, Right Glass	022-000749

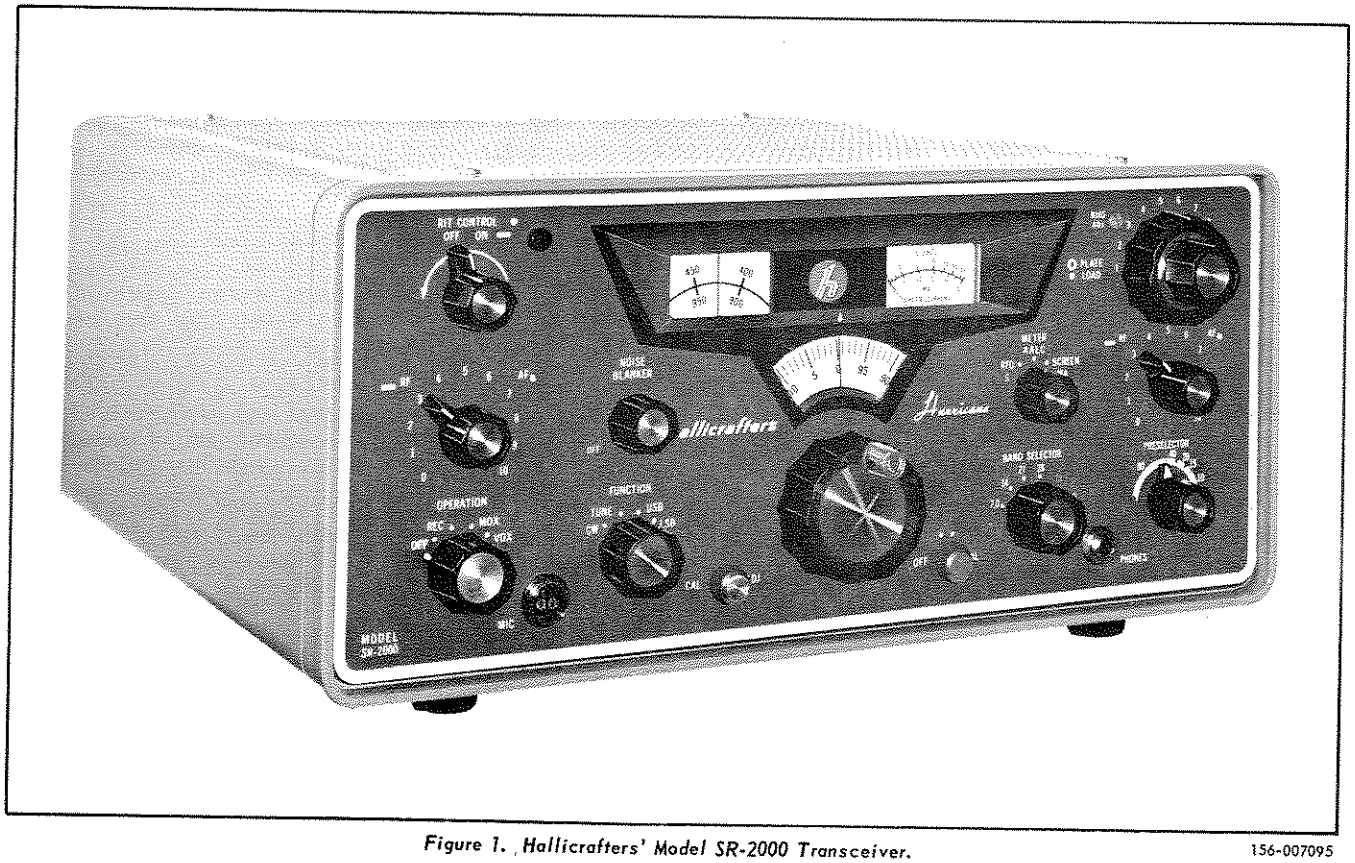

Figure 1. Hallicrafters' Model SR-2000 Transceiver. 156-007095

SECTION I
GENERAL DESCRIPTION

1-1. INTRODUCTION.

The Hallicrafters Model SR-2000 Transceiver is a precision built, compact, high performance transceiver of advanced design. The transceiver utilizes 19 tubes plus one voltage regulator and 22 diodes in a double conversion heterodyning system for transmission and reception of single sideband (SSB) and continuous wave (CW) code signals on the 80, 40, 20, 15, and 10 meter amateur bands.

With the Model P-2000 Power Supply and an antenna, key and microphone, the equipment represents a complete desk top amateur station capable of operating at a power level equal to the maximum legal limit. The final amplifier tubes are rated at 800 watts plate dissipation.

A special feature of the Model SR-2000 is the Receiver Incremental Tuning (RIT) control. This control enables the operator to unlock the receiver frequency and tune the receiver approximately 3 KC either side of the transmitter frequency without disturbing the transmitter tuning. Flipping the RIT switch OFF automatically returns the equipment to the transceiver condition.

Another desirable feature of the Model SR-2000 is the Amplified Automatic Level Control (AALC) which functions in the transmit mode. The AALC circuitry prevents splatter, due to severe flat-topping of the final amplifier signal, by providing about 15 DB of compression at the point when flat-topping begins to occur.

Other features of the Model SR-2000 Transceiver include:

- Noise blanker circuit operating ahead of the IF filter for effective noise limiting action.
- Choice of VOX or PTT control for SSB operation and a choice of manual or automatic break-in control for CW operation.
- Upper and lower sideband operation with common carrier frequency on all bands.
- Smooth gear driven tuning mechanism with one kilocycle readout display.

- An accurately calibrated VFO with excellent mechanical and temperature stability.
- Constant tuning rate on all bands.
- Crystal lattice 1650 KC filter with 6 poles for optimum selectivity and single sideband response.
- Product detector with crystal controlled beat frequency oscillator injection for maximum stability.
- Keyed sidetone for monitoring CW transmissions.
- Excellent cross modulation and overload characteristics.
- Complete metering for the final amplifier tubes — Separate plate voltage, plate current and screen current meters.
- "S" meter for receiver and RFO metering for transmitter tuning convenience.
- Built-in 100 KC crystal calibrator for exact dial calibration.

1-2. TVI (TELEVISION INTERFERENCE) SUPPRESSION.

The Model SR-2000 Transceiver has been designed and constructed to suppress spurious radiation that may cause television interference. The TVI problem was given full consideration in the design and layout of the chassis. Components specifically selected to avoid undesired resonances and arranged to prevent parasitic oscillation have been used throughout.

There are, however, some types of TVI that cannot be prevented within the transmitter itself. This is particularly true in fringe reception areas. In such cases, a good commercial low-pass filter connected at the transceiver antenna connector is recommended. For a more complete discussion of measures that may be used to handle special problems of this type, refer to the "Radio Amateur's Handbook" published by the American Radio Relay League.

IMPORTANT

Do not attempt to operate the Model SR-2000 equipment before becoming completely familiar with the instructions contained within this manual.

SECTION II
TECHNICAL SPECIFICATIONS

TUBES AND FUNCTIONS

V1	12DK6	Receiver RF Amplifier
V2	7059	Receiver and Transmitter 1st Mixer
V3	7059	IF Amplifier and AALC Amplifier
V4	12AT7	2nd Receiver Mixer and VFO Amplifier
V5	7059	Noise Amplifier and Pulse Amplifier
V6	6GX6	1st 1650 KC IF Amplifier and Blanker
V7	7059	2nd 1650 KC IF Amplifier and Side Tone Amplifier
V8	7059	AGC Amplifier and Meter Amplifier
V9	12AT7	Product Detector and 1st Audio Amplifier
V10	OA2	Voltage Regulator
V11	7059	2nd Transmitter Mixer and 100 KC Crystal Oscillator
V12	7056	Heterodyne Oscillator
V13	12BA6	VFO
V14	12AT7	BFO/Carrier Oscillator and 3rd Mic. Amplifier
V15	6AQ5	Audio Output
V16	8122	Transmitter Power Amplifier
V17	8122	Transmitter Power Amplifier
V18	12BY7A	Transmitter Driver
V19	12AT7	1st Mic. Amplifier and 2nd Mic. Amplifier
V20	12AT7	VOX Amplifier and Relay Amplifier

GENERAL.

Tuning Ranges . . . . . Full frequency coverage of the amateur bands in eight ranges as follows:

80M	3.5 to 4.0 MC
40M	7.0 to 7.5 MC
20M	14.0 to 14.5 MC
15M	21.0 to 21.5 MC
10M	28.0 to 28.5 MC
10M	28.5 to 29.0 MC
10M	29.0 to 29.5 MC
10M	29.5 to 30.0 MC

Heterodyne Oscillator Crystals . . . . . Type CR-18A/U in HC-6 holder

Band	Frequency
3.5	10,000.000 KC
7.0	13,500.000 KC
14.0	10,250.000 KC
21.0	13,750.000 KC
28.0	17,250.000 KC
28.5	17,500.000 KC
29.0	17,750.000 KC
29.5	18,000.000 KC

Types of Emission . . . . . SSB - Selectable USB/LSB with suppressed carrier.

CW - Keyed RF carrier.

Frequency Control . . . . . Self-contained VFO for transmit and receive modes. Separate transmitter frequency control available with Model HA-20 DX Adaptor unit.

Transmission Control . . . . . Single Sideband Operation

MOX - Manual (Push-to-talk).

VOX - Voice control.

CW Operation.

MOX - Manual.

VOX - Automatic break-in.

Dial Calibration. . . . . One KC increments, 500 KC tuning range.

Calibration Accuracy. . . . . Less than 2 KC error across the dial after indexing at high frequency end of the dial. Band to band calibration error less than ±2 KC. Internal 100 KC crystal controlled calibrator.

Frequency Stability . . . . . Less than 250 cycles drift in first hour, after a fifteen minute warm-up, and less than 100 cycles per hour thereafter.

Tube and Diode Complement . . . . . 19 tubes plus one voltage regulator and 22 diodes. See table of Tubes and Functions.

Cable Connector Data . . . . . Front Panel

MIC connector - Amphenol type 80-MC2M.

PHONES jack - Standard 1/4-inch two conductor phone plug.

Rear Cabinet

KEY jack - Standard 1/4-inch two conductor phone plug.

ANTENNA connector - Mil. No. PL-259 (49190) UHF series.

RCVR AUDIO (500 OHMS) connector - Standard RCA phono plug.

POWER connector - Cinch-Jones type S-312-CCTL (12-pin plug).

HI-VOLTAGE connector - Cinch-Jones type S-2402-CCT (2-pin plug).

ACCESSORY connector - Amphenol type 86-PM11 (11-pin plug).

Power Supply Requirements . . . . . Model P-2000 (Refer to data for Model P-2000 Power Supply).

Construction . . . . . Light weight aluminum.

Dimensions (HWD) . . . . . 7-3/4 x 16-1/2 x 15 inches.

Net Weight . . . . . 26 pounds.

Shipping Weight . . . . . 30 pounds.

TRANSMITTER

Power Input* . . . . . SSB HIGH POWER - 2000 watts PEP.

SSB LOW POWER - 1000 watts PEP.

CW - 900 watts maximum.

Power Output* . . . . . SSB HIGH POWER - 1000 watts PEP.

SSB LOW POWER - 500 watts PEP.

CW - 500 watts.

*Slightly lower on 15M and 10M bands.

Output Impedance . . . . . 50 ohms nominal. Adjustable, 40 to 70 ohms essentially non-reactive.

Type of Sideband Generation . . . . . Solid state modulator with 1650 KC, 6 pole crystal filter. (Nominal 3 DB BW = 2.1 KC.)

Microphone Input . . . . . High impedance. Input sensitivity of 5 millivolts RMS or less for PEP output.

Audio Response Overall	500 to 2400 CPS (6 DB).
Distortion Products	30 DB signal to distortion ratio.
Unwanted Sideband Rejection	50 DB below desired output at 500 to 2500 CPS input.
Carrier Suppression Capability	60 DB below PEP output.
Spurious Emission	50 DB or more below PEP output.
CW Side Tone	800 CPS nominal.

RECEIVER

Antenna Input	50 ohms nominal.
Audio Output Impedance	3.2 ohms and 500 ohms.
Sensitivity	One microvolt or less for 20 DB signal to noise ratio.
Audio Output	One watt with less than 10% distortion.
Dual Conversion System	First IF = 6 MC to 6.5 MC Second IF = 1650 KC with crystal lattice filter.
Crystal Lattice Filter	Six pole, symmetrical passband. Center frequency = 1650 KC. B/W = 2.1 KC (3 DB). B/W = 4.2 KC (50 DB). Carrier frequencies: USB = 1651.550 KC. LSB = 1648.550 KC.
AVC Figure of Merit	60 DB or more RF input change for less than 10 DB change in audio output.
RIT Frequency Range	4 KC minimum.
In Band Tweets	Less than one microvolt equivalent CW signal.
First IF Rejection	Better than 46 DB (4.0 MC and 7.0 MC). Better than 60 DB at all other frequencies.
Image and Spurious Rejection	Better than 50 DB.

ACCESSORIES

Model P-2000 Power Supply

Styled as a companion unit to the Model SR-2000 Transceiver, the power supply also contains the speaker and final amplifier plate metering facilities for the transceiver. The speaker is a 3 X 5-inch unit with a frequency response optimized for the voice frequency range.

Two meters provide for monitoring the final amplifier plate current (0 to 1 ampere) and plate voltage (0 to 5 kilovolts). The metering circuits employed, permit the meter cases to operate at ground potential thereby avoiding a shock hazard.

Solid state silicon rectifiers are employed throughout for cool, maintenance free operation.

The low voltage circuits such as heater supply, low B+, receiver audio, etc. are carried in one cable with a 12-pin connector while the final amplifier plate and screen supply voltages are carried in a separate cable and plug termination to provide a maximum safety factor.

The power supply is shipped from the factory with the line cord wired and fitted with the plug for 115V, 2-wire service. A line cord plug is also supplied for use with 230V, 3-wire service.

Line protection is provided by two 12-ampere fuses wired so that they operate in series from a 230-volt AC source and in parallel from a 115-volt AC source. The use of one size fuse for either source voltage avoids the possibility of incorrect line protection.

Diode Complement - 9 silicon diodes.

Fuse Ratings -
12 Ampere 250V type 3 AB.
3 Ampere 250V type 3 AG.

Power Supply Requirements -
115V, 2-wire or 230V, 3-wire AC, 60 cycles, single phase.

Input Power Requirements -
Transmit - 2300 Watts.
Receive - 175 Watts

Dimensions (HWD) - 7-3/4 x 10-5/8 x 15 inches.

Net Weight - 61 pounds.

Shipping Weight - 65 pounds.

Model HA-20 DX Adapter

Styled to complement the Model SR-2000 Transceiver, the DX adapter contains a VFO unit equal to the VFO in the Model SR-2000 and a VSWR bridge.

The VFO in the DX adapter provides separate transmitter frequency control which will allow reception with the Model SR-2000 VFO outside the American Amateur bands and transmission, via the DX adapter VFO, within the American bands. Dial calibration of the DX adapter VFO, through the Model SR-2000 Transceiver and calibrator, provides transmitter frequency control equal to that of the Model SR-2000 Transceiver.

The VSWR bridge metering and forward/reverse RF power switching are contained within the DX adapter. The bridge module connected into the antenna transmission line is designed to handle the full PEP output of the Model SR-2000. With a continuous VSWR check available, the operator knows at all times whether his antenna system is functioning properly.

The DX adapter receives power from its own 115V AC line cord. The control and signal circuits are carried to the Model SR-2000 through the ACCESSORY cable connector.

Power Supply Requirements -
115V AC, 60 cycles, 20 watts.

Dimensions (HWD) - 7 x 10-5/8 x 8 inches.

Net Weight - 9 pounds.

Shipping Weight - 12 pounds.

SECTION III
INSTALLATION

3-1. UNPACKING.

After unpacking the Model SR-2000 Transceiver and Model P-2000 Power Supply, examine them carefully for possible damage that may have occurred in transit. If the equipment has been damaged, file a claim immediately with the carrier, stating the extent of the damage. Carefully check all shipping labels and tags for special instructions before removing or destroying them.

The power supply unit is shipped on a wood platform to support its weight. To remove the shipping platform, carefully turn the power supply unit over and set it down bottom side up. When handling the power supply, keep in mind that it weighs around 60 pounds. Remove the four shipping platform mounting screws (No. 10 x 3/4 — inch) and lift the platform clear. Mount the four cabinet feet with the No. 10 x 1/2 — inch screws and flat washers supplied. The cabinet feet are fastened to the cabinet and chassis in the same mounting holes that were used for attaching the shipping platform. Be sure to install the flat washers between cabinet feet and the heads of the screws. DO NOT USE THE No. 10 x 3/4 — INCH SHIPPING PLATFORM HARDWARE TO FASTEN THE CABINET FEET.

Set the power supply unit back on its feet.

3-2. LOCATION.

The Model SR-2000 Transceiver and Model P-2000 Power Supply are, for operating convenience, designed to be placed side by side. The power supply may be located on either side of the transceiver unit as desired. It is very important that the transceiver be placed in an operating position that provides unobstructed circulation of

air directly behind and at the top of the unit. The air intake for the cooling blower is located at the rear of the cabinet and the unit exhausts the warm air out the top of the cabinet. UNDER NO CIRCUMSTANCES SHOULD ANY OBJECT BE PLACED ON TOP OF EITHER CABINET WHICH WOULD OBSTRUCT NORMAL FLOW OF THE COOLING AIR.

3-3. POWER SOURCE.

The Model P-2000 Power Supply for the Model SR-2000 Transceiver is designed to operate from either 115-volt, 2-wire, or 230-volt, 3-wire 60 cycle single phase service. Operation from 230-volt, 2-wire service, available in many countries will necessitate the use of an additional conversion transformer. Details for this type installation may be obtained by contacting The Hallicrafters International Division, 4401 W. 5th Avenue, Chicago, Illinois, 60624.

Under peak power input conditions, the equipment may draw in excess of 10 amperes from 230-volt service or in excess of 20 amperes from 115-volt service. This power requirement will generally exceed the capabilities of most home 115-volt wall outlets. If the station is to operate from a 115-volt outlet, a separate circuit rated at 30 amperes should be provided.

3-4. PRIMARY POWER CONNECTIONS.

The power supply is shipped from the factory with the line cord wired for 115-volt service outlets. The junction box wiring for the line cord may be exposed for inspection by removing the back cover of the power supply. The cover is held in place with two screws. See figure 2.

Note that the line cord wiring for 115-volt service requires that one side of the line shall be connected to terminals 1, 2 and 5 and the other side of the line shall be connected to terminals 3 and 4. The ground pin of the line cord plug is wired to the ground bolt on the chassis (Green lead).

If the equipment is to operate from a 230-volt, 3-wire, 60 cycle single phase service outlet, make the following changes in the power supply terminal strip wiring.

A. Disconnect the line cord leads (three leads) and all jumpers connected to the terminal strip and to the chassis ground bolt. Retain the jumper wires for possible re-use.

B. Connect terminal 2 to terminal 3, using the short jumper wire just removed in step A.

C. Connect the green line cord lead to terminal 5. This is the neutral wire of the three wire system.

D. Connect one of the two remaining line cord leads (black or white) to terminal 1 and the other to terminal 4. This completes the terminal strip wiring for 230-volt operation.

E. Disconnect and remove the line cord plug supplied for 115-volt service. A 230-volt service plug has been supplied with the power supply for this purpose. Install and wire the 230-volt service plug, connecting the green neutral lead to the neutral pin and the black and white leads to each of the blade contacts. If the 230-volt service outlet does not match the style plug supplied, obtain a matching plug and wire as required. Make sure the green line cord lead is connected to the neutral terminal of the service outlet.

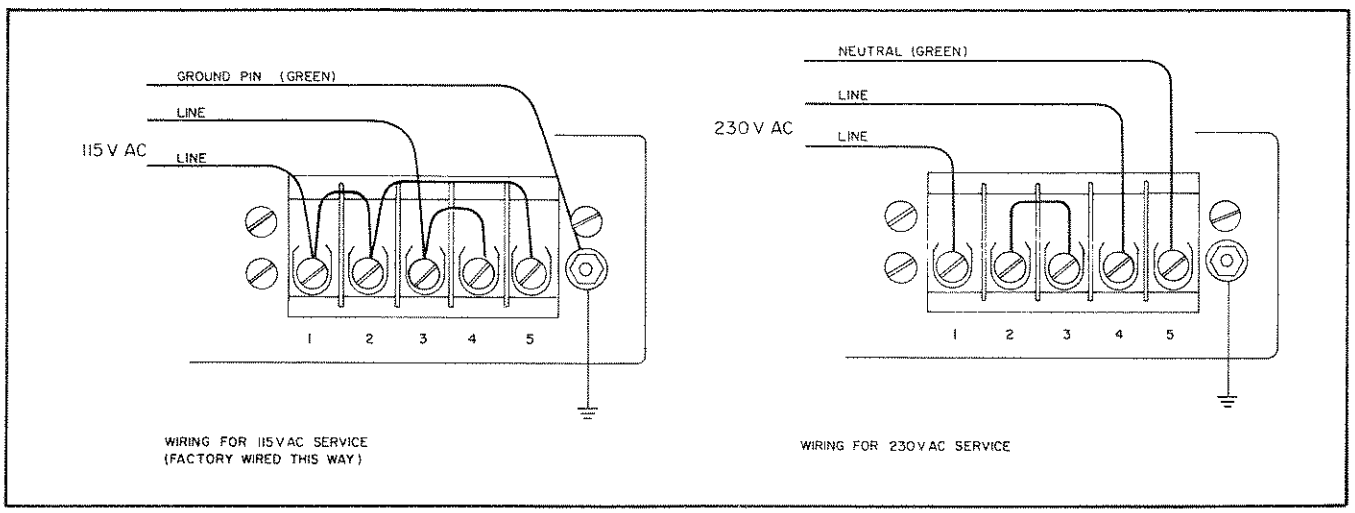

156-007366

Figure 2. Model P-2000 Power Supply, Primary Power Connections.

CAUTION

THE VOLTAGES USED IN THE MODEL SR-2000 AND MODEL P-2000 ARE LETHAL. NEVER DEFEAT THE SAFETY INTERLOCK OR WORK INSIDE THE CABINETS OF EITHER UNIT WITH PRIMARY POWER CONNECTED.

3-5. INTER-CONNECTING THE TRANSCEIVER AND POWER SUPPLY.

The line cord must not be connected to the service outlet while interconnecting the two units. Interconnect the two units as follows:

A. Plug the 12-pin low voltage cable connector into the transceiver receptacle marked POWER, located at the rear of the transceiver cabinet.

B. Plug the 2-pin high voltage/screen voltage cable connector (two wire cable) into the mating receptacle at the rear of the transceiver cabinet near the top.

C. Interconnect the GROUND studs of the transceiver and power supply with the lugged ground braid supplied. Clamp the lugs of the braid between the flat washers of the ground studs and tighten the stud nuts securely. This braided ground strap acts as a safety bond between the power supply and transceiver units since it backs up the ground wire in the low voltage cable. Reference should be made to figures 3, 4, and 5 when interconnecting the two units.

3-6. GROUND CONNECTION.

In the interest of safety, it is strongly recommended that the Model SR-2000 and Model P-2000 units be grounded to a cold water pipe or good electrical earth ground. Station equipment that is left unbonded between units or between the equipment and ground may assume potential differences that could present a shock hazard.

In addition to the braided bond between the transceiver and power supply, connect a No. 14 ground wire or 1/8 inch tubular braid between the power supply ground stud and a cold water pipe or outside ground stake.

3-7. ACCESSORY CONNECTOR.

As shipped from the factory, the Model SR-2000 ACCESSORY receptacle will have a jumper plug (P1) installed to permit normal operation of the transceiver. Should the Model HA-20 DX Adaptor be added to the station set-up, remove the jumper plug and connect the mating cable connector from the Model HA-20 in its place.

3-8. ANTENNA CONNECTION.

The Model SR-2000 Transceiver is designed to terminate in a 50-ohm unbalanced transmission line.

While a non-reactive 50-ohm load is preferred for optimum results, a VSWR of 2:1 can be accommodated by the transmitter with acceptable results. Many of the popular di-pole or beam antennas using 50-ohm transmission lines will give excellent results.

For more detailed information on the subject of antennas, refer to the "Radio Amateur's Handbook" or the "ARRL Antenna Book" both published by the American Radio Relay League.

IMPORTANT

Some form of lightning protection should be provided which will comply with local code requirements.

The ANTENNA connector located on the rear chassis apron of the Model SR-2000 Transceiver mates with a Mil. No. PL-259 (49190) UHF series coaxial connector. Use 52-ohm Mil. No. RG-8/U coaxial cable or equivalent for the feed line to the station antenna system.

Antenna systems with terminating impedance other than 50 ohms will require an impedance matching device capable of handling RF power of better than one kilowatt PEP.

CAUTION

NEVER OPERATE THE MODEL SR-2000 TRANSCEIVER AS A TRANSMITTER WITHOUT A MATCHED ANTENNA OR ADEQUATE DUMMY LOAD TERMINATION. ILLUMINATING LAMPS WILL NOT PRESENT A CONSTANT LOAD IMPEDANCE. DAMAGE TO THE POWER AMPLIFIER TUBES AND PI NETWORK COMPONENTS IS POSSIBLE IF THE EQUIPMENT IS OPERATED AS A TRANSMITTER UNLOADED. DO NOT OPERATE THE TRANSMITTER INTO AN ANTENNA SYSTEM HAVING A HIGH VSWR ON ITS TRANSMISSION LINE.

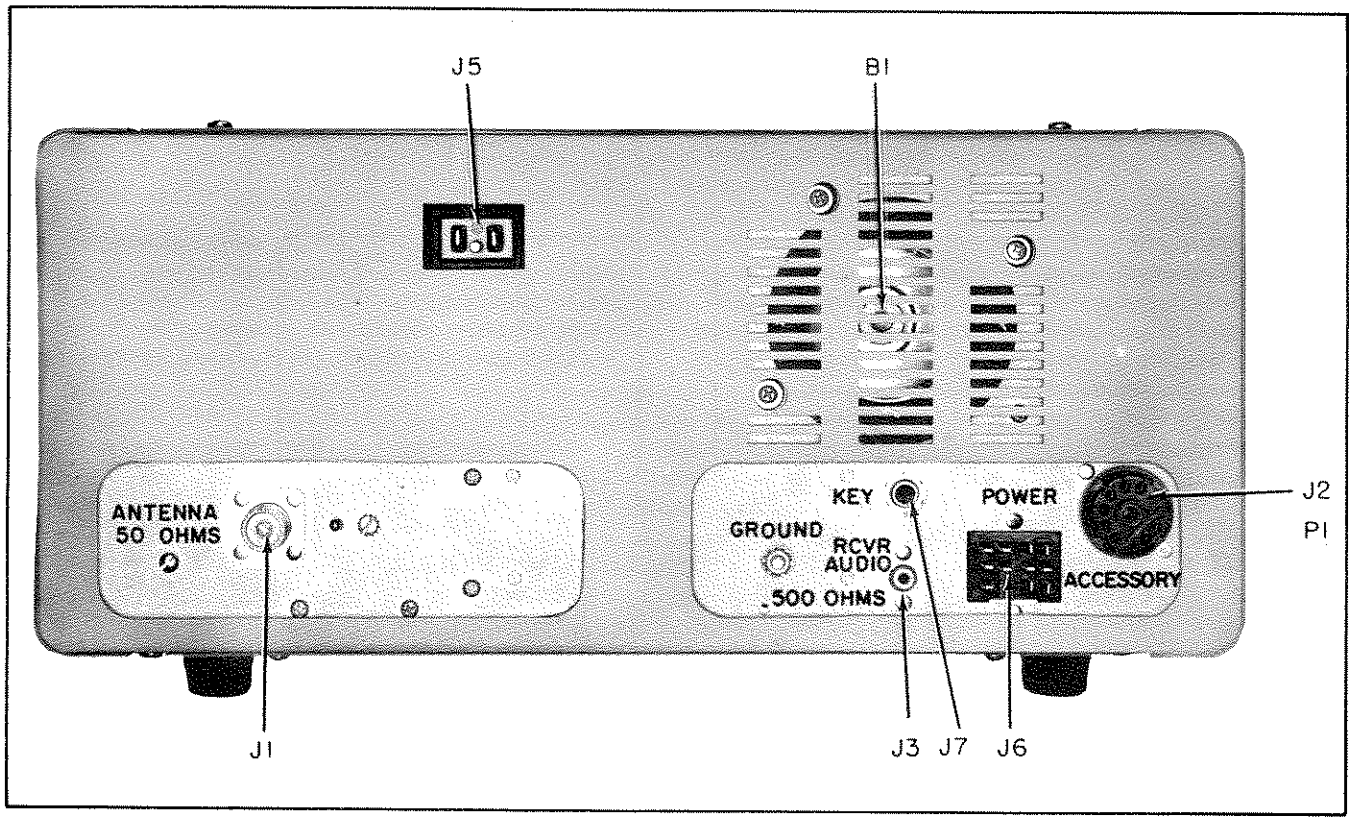

156-007098

Figure 3. Model SR-2000 Transceiver, Rear View.

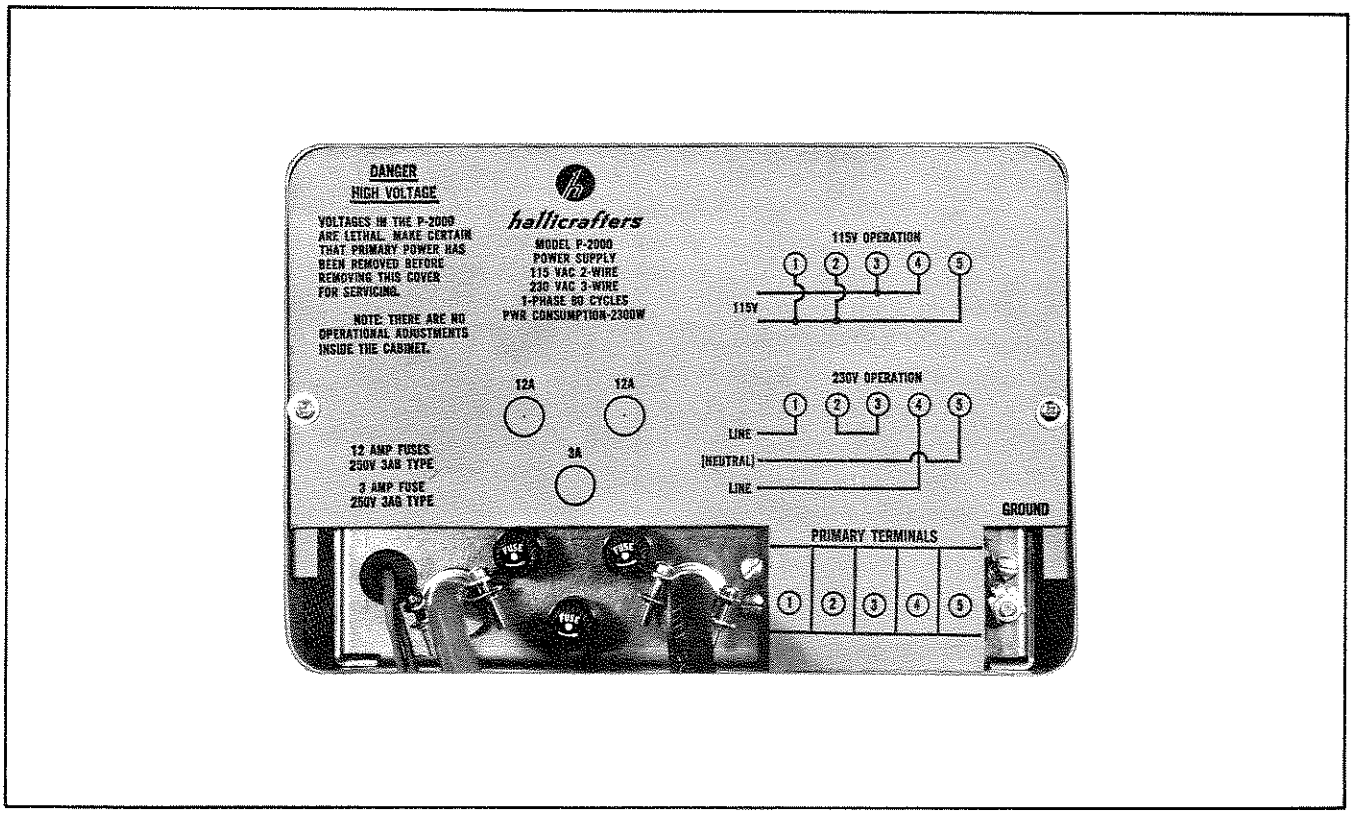

156-007566

Figure 4. Model P-2000 Power Supply, Rear View.

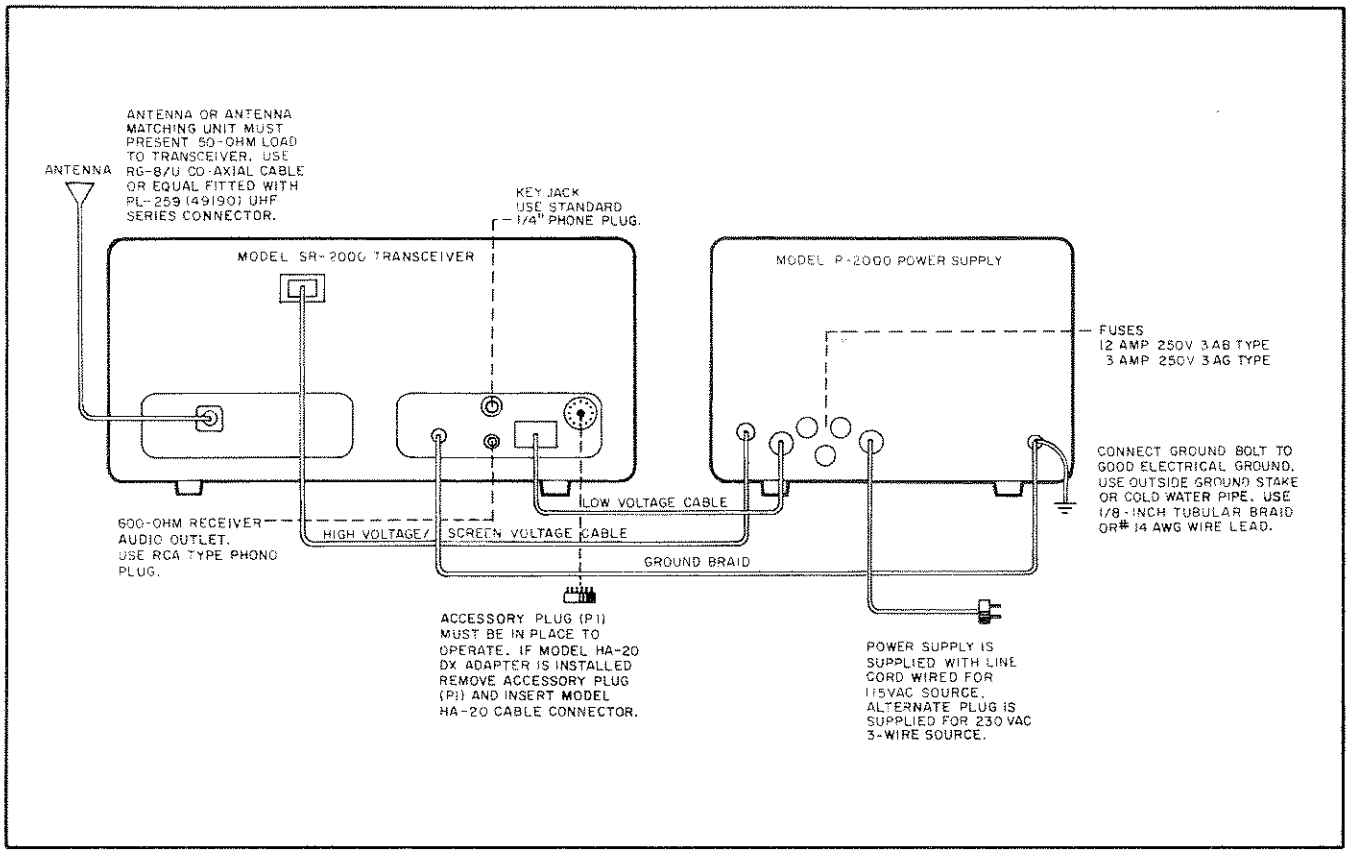

156-007380

Figure 5. Typical Installation.

3-9. MICROPHONE REQUIREMENTS.

The microphone receptacle is located on the front panel. The microphone cable should be fitted with an Amphenol type 80-MC2M connector wired as shown in figure 6.

Any good high impedance crystal or dynamic type microphone may be used, however best results will usually be achieved with a microphone designed especially for voice communication use.

The microphone circuit shown with the PTT switch may also be used with VOX control, however some microphones fitted with push-to-talk switches also mute the microphone element until the switch is pressed, hence VOX operation is not possible unless the microphone switch is altered accordingly.

Microphones without push-to-talk switching may be used with voice controlled operation (VOX). With the addition of the jumper wire shown (dashed line), these microphones may also be used when manual operation is desired. In this case, setting the OPERATION control at MOX places the transmitter on the air, and returning the control to REC puts the transceiver back in the receive mode.

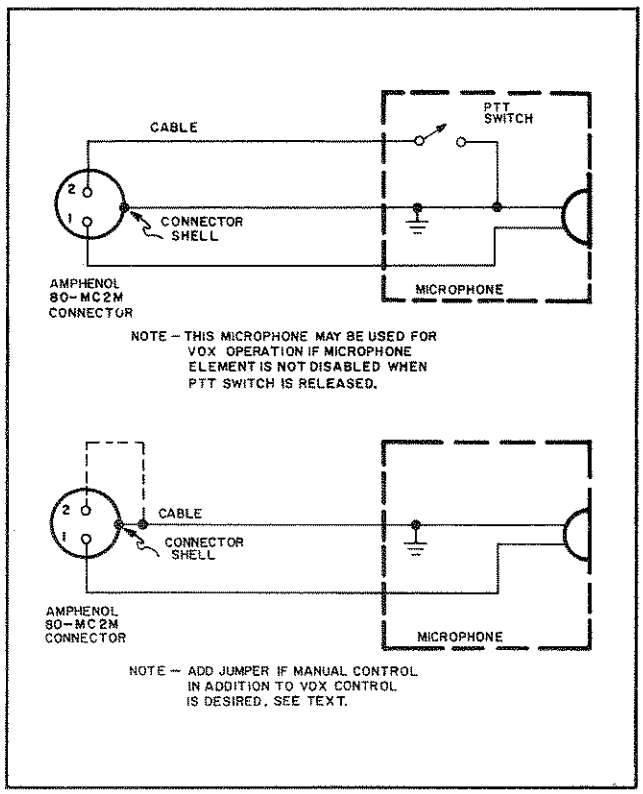

156-007375

Figure 6. Microphone Wiring, With and Without Push-to-Talk Switch.

3-10. KEYER CONNECTION.

The station keyer is connected to the transceiver at the key jack located on the rear chassis apron. The key jack accepts a standard 1/4-inch phone plug. Wire the plug so that the key base connects to the plug sleeve which is at ground potential.

3-11. HEADPHONE CONNECTION.

Headphone reception may be had by connecting headphones to the PHONES jack located on the front panel of the transceiver. The headset cord should be fitted with a standard 1/4-inch phone plug to mate with the panel jack.

The speaker unit in the Model P-2000 Power Supply is disabled when headphones are plugged into the PHONES jack. High or low impedance headphones may be used. A station speaker with a voice coil impedance of 3 to 4 ohms may be connected to the transceiver through the PHONES jack, if desired. Connect the ground side of the speaker or headphones to the sleeve terminal of the phone plug.

SECTION IV
FUNCTIONS OF OPERATING CONTROLS

All controls utilized during normal operation of the Model SR-2000 Transceiver and P-2000 Power Supply are located on the front panel of each unit.

MODEL SR-2000 CONTROLS

4-1. TUNING CONTROL.

The tuning control knob is located at mid panel just below the dial escutcheon. The control drives the VFO capacitor which is the frequency determining element of the transceiver. The frequency to which the unit is tuned is displayed in the left-hand window and in the window above the knob. Metering information is displayed in the right-hand window.

The frequency dial in the left-hand window has two calibrated scales. The black scale is calibrated from 0 to 500 KC and the red scale is calibrated from 500 to 1000 KC. The dial scales are color coded to the BAND SELECTOR calibrations which also display the first digits of the operating frequency to the left of the decimal point.

By rotating the tuning knob and watching the two dial displays you will observe that the knob scale divides the 100 KC increments of the main dial scale into one kilocycle increments.

The following examples will aid in developing the readout technique:

Set the BAND SELECTOR at 3.5 (Red), and set the tuning knob so that the red scale indicates 650 near the fiducial and the knob dial scale indexes at 55 with its fiducial. The frequency then reads out as 3.655 MC or 3655 KC.

Now set the BAND SELECTOR at 14, and leave the tuning knob set as before. The frequency now reads out at 14.155 MC or 14,155 KC since we are now using the black dial scale on this band. Basically, we obtain 14 MC from the BAND SELECTOR calibration and 155 KC, from the black dial and knob dial scales.

4-2. RIT CONTROL - ON/OFF.

The Receiver Incremental Tuning (RIT) control consists of two controls with concentric shafts. The ON/OFF function of the lever control either places the variable-element RIT control in or out of operation. This control, in the ON position, enables the operator to fine-tune the receiver plus or minus two KC by means of the RIT potentiometer (round knob) without disturbing the initial receiver or transmitter frequency. Returning the control to the OFF position again locks the receiver frequency to the transmitter frequency. RIT must be turned OFF to calibrate the dial or to operate the transmitter and receiver on a common frequency. The warning lamp to the right of the RIT control serves to call attention to the fact that the RIT control is in operation.

4-3. RF - AF (Receiver).

The RF and AF gain controls located in the left-hand group, are two potentiometers mounted on concentric shafts. The RF gain control (lever knob) varies the gain of the receiver RF amplifier stage. Maximum receiver sensitivity is obtained with the bar knob set at 10 (fully clockwise).

The AF gain control (round knob) adjusts the audio output level from the speaker or headphones (PHONES jack). Clockwise rotation of the control increases the audio signal level applied to the first audio amplifier stage of the receiver audio amplifier stages.

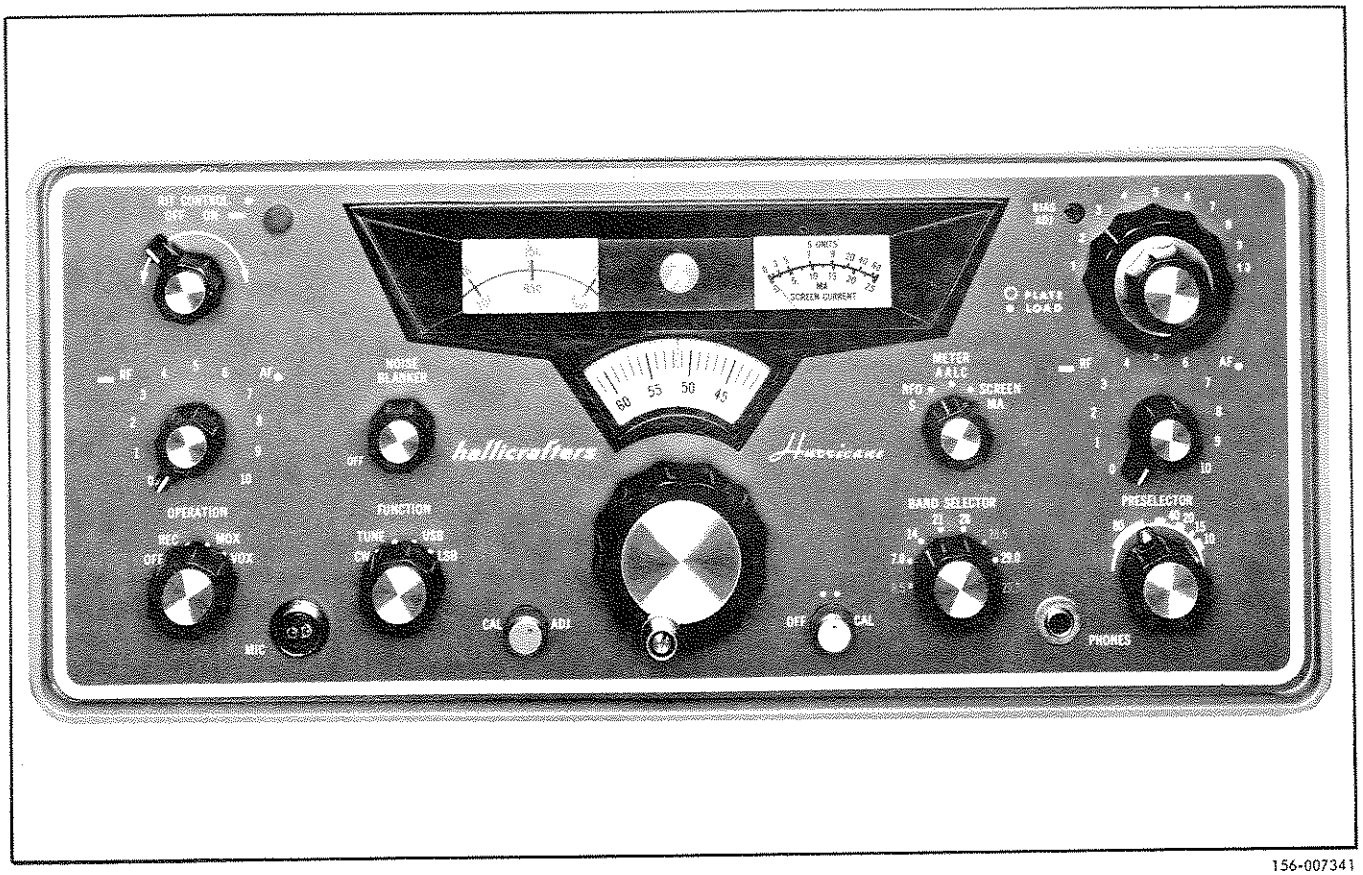

156-007341

Figure 7. Front Panel View of SR-2000 Transceiver.

4-4. OPERATION.

The OPERATION control is a four-position switch used to select the method of transceive control.

In the OFF position, all power is disconnected from the transceiver.

In the REC (Receiver) position, the receiver portion of the transceiver is placed in operation and all circuits common to both receiver and transmitter are in the receive condition, while circuits used only in the transmit mode are either biased off or switched off by the control.

In the MOX position, when operating SSB, the receiver circuits remain in effect until the microphone (push-to-talk) button is pressed. Closing the microphone switch transfers the circuitry from receive to transmit mode through the bias and relay switching. Releasing the microphone button again restores receiver operation. When operating the transceiver as a CW station, the receiver circuits are disabled when the control is set at MOX and the transmitter circuits are then keyed for code transmission. Returning the operation control to REC restores receiver operation.

In the VOX position the receiver circuits continue to function until the transmitter circuitry is energized by voice for single sideband operation or by pressing the key for code transmission. In the absence of voice or keying, the transceiver is automatically returned to the receiver mode, hence this position is used for automatic or break-in phone and CW control.

4-5. FUNCTION.

The FUNCTION control is a four-position switch used to select the mode of transmission or reception. The control is set at CW for code transmission; at TUNE when tuning the transmitter for CW or SSB operation; and at either USB or LSB for single sideband operation depending upon which sideband is selected for voice communication.

4-6. NOISE BLANKER/OFF.

The NOISE BLANKER control is a potentiometer which varies the operating bias voltage applied to the noise amplifier stage in the receiver IF amplifier system. Rotating the control full counterclockwise disables the noise blanker operation and the receiver functions in a conventional manner without noise immunity.

When noise immunity is desired the NOISE BLANKER control is turned clockwise from its OFF position until the noise level drops to an acceptable signal to noise ratio.

4-7. CAL. ADJ. (Dial Calibration Adjustment).

Dial calibration error of the tuning dial may be corrected by the CAL. ADJ. control. The dial calibration mark and the frequency of reception or transmission may be made to coincide with the use of this control adjustment and the 100 KC crystal marker oscillator (OFF/CAL switch).

4-8. OFF/CAL (Calibrate Signal).

This is an ON/OFF switch used to turn on the 100 KC marker crystal oscillator when the operator wishes to check the dial calibration accuracy of the SR-2000 at the 100 KC points on the dial.

4-9. BAND SELECTOR.

The BAND SELECTOR control is an eight-position rotary switch used to select the desired operating frequency range. The panel markings refer to the low frequency limit of that band in megacycles. The switch positions in red indicate that the red dial scale is to be used on these bands, and the black dial scale is used for the remaining bands.

4-10. PRESELECTOR

The PRESELECTOR control drives a three-section variable capacitor which tunes both receiver and transmitter circuits to frequency within a given band. In the receive mode the receiver RF amplifier and first mixer stages are tuned to frequency, while in the transmit mode, the control tunes the transmitter second mixer and driver stages to frequency. The segmented dial scale provides for an initial setting when changing bands.

For general receiver tuning, the control is adjusted for maximum receiver sensitivity, however, for transceive operation the control is adjusted for maximum transmitter output during transmitter tune-up and left at this setting for the receive mode.

4-11. RF – AF (Transmitter).

The RF and AF controls, located in the right-hand group, are two potentiometers mounted on concentric shafts. The RF level control (lever knob) varies the RF carrier level for CW operation or for tune-up purposes for both CW and SSB operation. Maximum CW output is obtained as the bar knob is turned clockwise toward 10 on the panel.

The AF gain control (round knob) adjusts the audio level to the balanced modulator stage from the microphone amplifier stages. Clockwise rotation of the control knob increases the microphone sensitivity and reaches maximum sensitivity at 10 on the panel.

4-12. METER.

The METER control is a three-position switch used to select the metering information desired by the operator.

In the receive mode the first two switch positions provide "S" meter information about the received signal strength. At S-9 on the meter scale, the received signal level represents approximately 50 microvolts at the antenna terminals. The third switch position functions only in the transmit mode.

In the transmit mode the first switch position, marked RFO, provides an RF voltage measurement across the antenna terminals of the transmitter for tune-up purposes. Since the transmitter will always be tuned for maximum RF voltage, the meter calibration, as such, is relative and the operator may use the S-meter scale to keep track of normal output levels obtained for CW and SSB operation.

In the AALC switch position the meter monitors the amplified automatic level control voltage developed to control the final amplifier drive level for SSB operation. A meter deflection in this position indicates that the voice peaks are approaching the point of flat topping of the output signal. Excessive deflection during SSB transmission is normally corrected by backing off the setting of the microphone gain control until only an occasional pointer deflection is noted.

In the SCREEN MA position the meter indicates the screen current drawn by the final amplifier tubes while transmitting. In the receive mode the meter is disabled. For further information regarding the use of the screen current meter readings refer to Section V, Tuning Procedure.

4-13. PLATE – LOAD (Final Tuning).

The PLATE and LOAD controls consist of separate variable air capacitors in the PI network circuitry of the final amplifier. They are driven through concentric shafts by two knobs, the larger of the two knobs drives the plate capacitor and the smaller knob drives the load capacitor. A 0 to 10 panel scale provides the operator with a logging scale for pre-setting the capacitors when changing bands. For more specific information on the use of these controls, refer to Section V, Tuning Procedure.

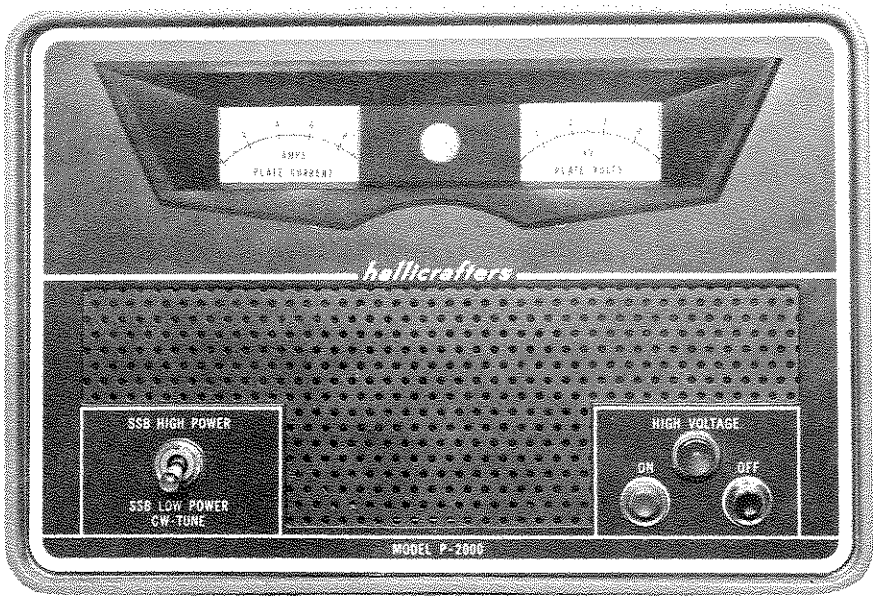

156-007565

Figure 8. Front Panel View of P-2000 Power Supply.

4-14. BIAS ADJ.

The BIAS ADJ. control sets the operating bias required by the final amplifier tubes. It is a screwdriver type adjustment to avoid disturbing its setting unintentionally. Once set, high or low power operation may be selected without resetting the adjustment. The bias adjustment must be made when the transmitter is first placed in operation, and then only an occasional check and possible adjustment will be required thereafter.

MODEL P-2000 CONTROLS.

4-15. SSB HIGH POWER/SSB LOW POWER-CW-TUNE.

The operator has the option of using either of two plate supply voltages on the final amplifier tubes. With the switch set at SSB HIGH POWER the supply voltage will be 2700 VDC for maximum power input. With the switch set at SSB LOW POWER-CW-TUNE the supply voltage will be 1700 VDC for reduced power input. The final amplifier bias voltage is automatically changed as the switch is set, to maintain correct operating bias for either power level.

To avoid unintentionally tuning up with the highest voltage applied to the final tubes, the control circuits are so arranged that plate voltage can only be applied when the High Power/Low Power switch is in the SSB LOW POWER-CW-TUNE position. After applying plate voltage with the HIGH VOLTAGE-ON switch and tuning up, the higher power level may then be selected.

4-16. HIGH VOLTAGE ON/OFF SWITCHES.

The plate and screen circuits of the final amplifier tubes are not energized at the time the OPERATION switch is set at REC to apply power to the transceiver for receiver use.

A time delay relay, K303, in the power supply unit prevents application of plate and screen voltage to the final amplifier stage for a period of one to two minutes while the final amplifier tubes come up to operating temperature. Following the delay period, the plate current and plate voltage meter scales light up indicating a "ready" condition. The plate and screen voltage may now be applied by pressing the HIGH VOLTAGE-ON button, providing the High Power/Low Power switch is in the SSB LOW POWER-CW-TUNE position. The application of plate and screen voltage to the final amplifier stages is indicated by the red warning lamp. To remove the plate supply voltage, press the OFF button — the warning lamp goes out.

SECTION V
TUNING PROCEDURE

5-1. GENERAL.

The operating procedure for the Model SR-2000 Transceiver is not complicated; however, normal care should be exercised when operating the gear to realize the true performance designed into the equipment. Before applying power to the equipment for the first time, it would be well to recheck the critical items of the installation.

- Is the line cord correctly wired for the supply voltage used?
- Is the station antenna system connected and is it compatible with the power capability and load impedance requirements of the transceiver?
- Are the interconnecting cables between the Model SR-2000 Transceiver and Model P-2000 Power Supply in place?
- Is the equipment bonded to a good electrical ground?

IMPORTANT

Before operating the transmitter portion of the transceiver, the bias adjustment control (BIAS ADJ), located on the transceiver panel, must be correctly set. Refer to the basic transmitter tune-up procedure (Paragraph 5-4, C) or to the bias adjustment procedure in SECTION VIII (Paragraph 8-3).

5-2. RECEIVER OPERATION.

The transmitter group of controls, not specifically mentioned below, have no direct bearing on receiver operation and may be disregarded for the moment.

A. Pre-set the Model SR-2000 panel controls as follows:

RIT CONTROL . . . . . OFF

RF (Receiver group) . . . . . 10 (Full CW)

AF (Receiver group) . . . . . As required

OPERATION . . . . . OFF

FUNCTION . . . . . USB or LSB as required

NOISE BLANKER . . . . . OFF (Full CCW)

OFF/CAL . . . . . OFF

BAND SELECTOR . . . . . Desired band

PRESELECTOR . . . . . Set at band segment in use

METER . . . . . RFO/S

B. Connect the line cord plug to the power source outlet and set the OPERATION control at REC. The dial and meter faces on the transceiver will become illuminated and the blower for the final amplifier stage will start and run at low speed. Check to be sure the blower is operating, it must run at low speed when the heater power is applied to the final amplifier stage tubes. When the transceiver is switched from the receive to transmit mode, the blower speed will increase to provide maximum cooling.

After a one to two minute delay the meters in the Model P-2000 Power Supply will become illuminated indicating that the delay relay has closed. The high voltage may be applied anytime after the delay relay has closed.

Generally the high voltage is left off until transceiver operation is contemplated.

C. Use of the PRESELECTOR Control – As the receiver is tuned across the band an occasional readjustment of the PRESELECTOR control will be found necessary. Always adjust it for maximum "S" meter reading on signal or for maximum background noise without signals present. When the PRESELECTOR control has been set on frequency during transmitter tune-up, it must then be left at that setting for receive. The exact setting is more critical for transmitter operation than for the receiver mode.

D. Use of the RF control – Normally the RF (Receiver group) control is set at 10 or full clockwise to obtain full AGC (Automatic Gain Control) action for uniform speaker output while tuning in stations of varying signal strengths across the band. While AGC is customarily employed for SSB reception, it may also be used to advantage for CW code reception. The RF control must be set at its full clockwise position to obtain normal "S" meter operation, as you will notice that the "S" meter deflection falls off on signal as the RF control is backed off from its maximum setting.

Manual control of the receiver sensitivity, at times, is desirable and the operator may set the RF control as required for these occasions.

E. Tuning with the RIT Control — There are contacts wherein the operator finds it advantageous to be able to tune his receiver a few kilocycles either side of the operating frequency without disturbing his own transmitter frequency. The Model SR-2000 transceiver has the capability to do just that. To tune the receiver a few kilocycles (2 to 3 KC) either side of the operating frequency without disturbing the transmitter frequency, switch the RIT control ON (lever knob) and then tune the receiver with the RIT (knob) control. The transmitter will remain set at the dial frequency. Turning the RIT knob clockwise increases the receiver frequency. Switching the RIT control OFF returns the receiver to the dial frequency.

One word of caution. Don't leave the receiver in the RIT position when true transceive operation is desired, since it would be a matter of chance if the two modes happened to be operating on the same frequency. The warning lamp serves to call attention to the fact that the RIT control is active.

F. How to use the NOISE BLANKER Control — Receiving conditions disrupted by severe impulse type noise may be improved measureably with the use of the NOISE BLANKER control. As with all noise silencers, the situation can generally be improved but not cured. When severe impulse noise (ignition, electrical appliances, etc.) is encountered, turn the NOISE BLANKER control clockwise until the noise level drops. The control is a noise amplifier stage gain adjustment and must be set on a threshold basis, that is, at the point where the noise pulses appear to be canceled. An increase in gain setting beyond this point will not improve the signal to noise ratio, but can introduce undesirable side effects such as cross modulation products resulting in spurious signal reception.

The noise blanker works equally well for SSB or CW code reception.

5-3. DIAL CALIBRATION.

A. Preset the Model SR-2000 panel controls as follows:

RIT CONTROL . . . . . OFF

RF (Receiver group) . . . . . 10 (Full CW)

AF (Receiver group) . . . . . As required

OPERATION . . . . . REC

FUNCTION . . . . . USB or LSB as required

NOISE BLANKER . . . . . OFF (Full CCW)

OFF/CAL . . . . . CAL

BAND SELECTOR . . . . . Desired band

PRESELECTOR . . . . . Tune for maximum "S" meter deflection

METER . . . . . RFO/S

B. To calibrate the dial for average accuracy over the entire band, set the dial to the highest 100 KC point on the band (4000 KC on 80M, 7500 KC on 40M, etc.) and use the LSB FUNCTION control position while calibrating.

For better than average dial calibration accuracy, set the dial at the 100 KC point on the dial nearest the desired frequency and leave the FUNCTION control set for the sideband in use.

In either case the knob dial scale will read zero when correctly set to the 100 KC point on the main dial.

C. Adjust the CAL ADJ control for zero beat. It may be necessary to advance the AF control setting to recover sufficient audio near zero beat. The RIT CONTROL must be set at OFF when calibrating the dial.

D. After calibrating the dial, shut the calibrator off. Operation of the Model SR-2000 with the calibrator turned on is not recommended. Switch it on for dial calibration checks only.

5-4. BASIC TRANSMITTER TUNE-UP.

The transmitter portion of the transceiver is always tuned with the High Power/Low Power switch in the SSB LOW POWER-CW-TUNE switch position on the Model P-2000 Power Supply. The receiver group of controls, not specifically mentioned below, have no direct bearing on the transmitter tune-up procedure and may be disregarded for the moment.

A. Preset the panel controls for transmitter tune-up as follows:

OPERATION . . . . . REC

FUNCTION . . . . . TUNE

BAND SELECTOR . . . . . Desired band

PRESELECTOR . . . . . Set at band segment in use

Tuning Dial . . . . . Set to desired frequency

METER . . . . . RFO/S

RF (Transmitter) . . . . . At zero (Full CCW)

AF (Transmitter) . . . . . At zero (Full CCW)

PLATE (Final Tune Capacitor) . . . . . (Nominal chart setting)

LOAD (Final Loading Capacitor) . . . . . (Nominal chart setting)

High Power/Low Power. . . SSB LOW POWER-CW-TUNE

HIGH VOLTAGE . . . . . OFF (Red indicator not illuminated)

B. Press the HIGH VOLTAGE ON button. The PLATE VOLTS meter indicates approximately 1700 VDC. The red HIGH VOLTAGE warning indicator lights. If the high voltage does not come on, check the High Power/Low Power switch setting, it must be set at SSB LOW POWER-CW-TUNE to activate the high voltage supply. The transceiver must be turned on for a period of 1-1/2 to 2 minutes before the delay relay will permit the application of high voltage to the final amplifier stage.

C. Set OPERATION control at MOX. PLATE CURRENT meter indicates 0.2 ampere (200 milliamperes) RFO meter indicates zero output. The blower speed increases.

NOTE

Should the PLATE CURRENT meter indicate other than 0.2 ampere and the RFO meter indicate zero, set the BIAS ADJ. control (screwdriver adjustment) for 0.2 ampere idle plate current. If the RFO meter indicates output, the plate current would be more than 0.2 ampere — check to see that the RF control setting is fully CCW (zero).

D. Watch the RFO meter and turn the RF control (transmitter group) clockwise slowly until the RFO meter indicates a low output level, say S-3 to S-5 on the "S" meter scale. Adjust the PLATE control first and then the PRESELECTOR control for maximum RFO meter reading. Turn the RF control counterclockwise, if the RFO meter indicates above S-7 while tuning. The driver and final amplifier stages are now resonated, but the final amplifier stage still requires a loading adjustment.

PLATE AND LOAD CONTROL SETTINGS FOR 50-OHM LOAD

FREQUENCY	PLATE		LOAD	
	NOMINAL	ACTUAL	NOMINAL	ACTUAL
3.5 MC	1		3	
3.75 MC	3-1/2		4	
4.0 MC	5		5-1/2	
7.0 MC	3 to 7		3-1/4	
14.0 MC	5		5	
14.35 MC	5-1/2		5-1/4	
21.0 MC	7		4-1/4	
21.45 MC	7-1/4		4-1/2	
28.0 MC	8-1/2		5	
29.7 MC	9		5-1/2	

The data above are based on average Model SR-2000 PLATE and LOAD control settings when operated into a purely resistive 50-ohm load. These settings will, of course, vary with the loading variations presented by your installation and it is suggested that you note in the appropriate column the final control settings required for use with your antenna to facilitate a rapid initial adjustment when changing bands or frequency within the band.

E. Set the METER switch at SCREEN MA. Watch the SCREEN current meter and the PLATE CURRENT meter and slowly turn the RF control clockwise until either the plate current reaches 0.4 to 0.5 ampere or the screen current rises to 10 to 20 MA. Turn the RF control counterclockwise to zero and consider the loading adjustment required as follows:

1. Loading too light – If the screen current reached 10 to 20 MA. with the plate current lagging behind or even refusing to rise to 0.4 or 0.5 ampere the loading is too light and the LOAD control must be turned clockwise to increase the coupling or loading on the final amplifier stage.

2. Loading too heavy – If the plate current reached 0.4 ampere to 0.5 ampere and the screen current either reversed or failed to rise to 10 to 20 MA., the loading is too heavy. To correct this condition, turn the LOAD control counterclockwise to reduce the loading.

3. Loading normal – When the plate current rises to 0.4 ampere or 0.5 ampere and the screen current rises to 10 to 20 MA. as a maximum as the RF control is turned fully clockwise, the loading is considered normal. At full clockwise rotation the screen current will fall back a few milliamperes indicating an overdriven condition.

F. Each time the LOAD control setting is changed, the PLATE control must be retuned to resonance. The screen current may be used to indicate plate circuit resonance as well as proper loading, since you will notice that the screen current passes through a maximum exactly as the RFO voltmeter goes through maximum when the PLATE control is tuned for resonance.

The exact LOAD control setting may now be determined as follows: Advance the RF control until the plate current reaches 0.4 to 0.5 ampere or the screen current reaches 10 to 20 MA. If the screen current remains at zero or reverses, turn the LOAD control counterclockwise a small amount to reduce the loading so that screen current, less than 15 milliamperes, will flow. Peak the screen current with the PLATE control to re-resonate the final stage. Continue to advance the RF control setting while holding the screen current to less than 20 MA. with a LOAD control adjustment and re-resonate the final stage each time with the PLATE control. When correct loading is obtained, the RF control may be rotated through its entire range and the screen current will rise to 10 to 20 MA. and possibly fall back a few milliamperes when the RF control is fully clockwise and in the over-driven condition.

G. As the operating frequency is changed within the band, retune the transmitter with the PRESELECTOR and PLATE controls for maximum RFO voltage or screen current to keep the driver stage and final amplifier stage plate circuits at resonance. When a major change in frequency is required which may effect the final amplifier loading, the load check and possible LOAD control adjustment should be made. Some idea of the variation in LOAD control setting with frequency within a given band may be obtained from the nominal settings shown in the tuning chart.

H. Set the OPERATION control at REC to restore receiver operation. When the use of the transmitter is not immediately required, disable the high voltage by pressing the HIGH VOLTAGE OFF button — the red warning lamp will go out.

5-5. CW OPERATION.

A. Before switching the OPERATION control from REC to MOX, check to see that the following controls are correctly set for CW operation:

High Power/Low Power. . .	SSB LOW POWER-CW-TUNE
HIGH VOLTAGE	Lamp is lit (ON button has been pressed)
FUNCTION	TUNE
METER	SCREEN MA
RF (Transmitter).	Zero (Full CCW)
AF (Transmitter).	Zero (Full CCW)
PLATE	Adjusted per paragraph 5-4
LOAD	Adjusted per paragraph 5-4
PRESELECTOR.	Adjusted per paragraph 5-4
BAND SELECTOR	Desired band
Tuning Dial.	Set to desired frequency

The plate voltage meter indicates 1.7 KV (1700 VDC).

B. Assuming that the transmitter has been properly loaded and tuned to frequency as described in the basic transmitter tune-up procedure, switch the OPERATION control from REC to MOX. The plate current meter indicates 0.2 ampere. Advance the RF control (transmitter group) until the screen current reaches maximum. If the screen current is 10 to 20 MA. and the plate current meter indicates 0.4 amperes to 0.5 amperes the loading is correct. Make one final adjustment of the PLATE control and PRESELECTOR control for maximum screen current to be sure the transmitter is in tune. Make this a habit – it saves tubes and puts a cleaner signal on the air.

C. Leave the RF control set and switch the FUNCTION control to CW. The transmitter output will drop to zero, providing the keyer circuit is open. Press the key. The screen current should be 10 to 20 MA. and the plate current should run between 0.4 ampere and 0.5 ampere. While transmitting the screen current may be monitored or if an "S" meter reading is desired while in the receive mode, the METER switch may be set at RFO/S. The maximum RFO voltage and maximum screen current occur at the same settings of the PLATE and PRESELECTOR controls for tune-up purposes.

D. Return the transceiver to the receive mode by switching the OPERATION control back to REC. This is your manual control over the transmit-receive function. If automatic control is desired, set the OPERATION control at VOX. The receiver will continue to operate until the key is closed. Open the key and observe the delay before the receiver is again active. This delay may be set as desired with the DELAY control, located under the cabinet cover. (See Figure 15.) The delay period increases as the DELAY control is turned clockwise.

E. The Model SR-2000 Transceiver also provides a CW side-tone signal through the speaker or headphone output, which is keyed along with the transmitter, for monitoring purposes. The level may be varied as desired with the SIDE TONE control located under the cabinet cover. See Figure 15.

5-6. PUSH-TO-TALK SSB OPERATION.

A. Before switching the OPERATION control from REC to MOX, check to see that the following controls are correctly set for SSB operation.

High Power/Low Power	SSB LOW POWER-CW-TUNE
HIGH VOLTAGE	Lamp is lit (ON button has been pressed)
FUNCTION	TUNE
METER	SCREEN MA
RF (Transmitter)	Zero (Full CCW)
AF (Transmitter)	Zero (Full CCW)
PLATE	Adjusted per paragraph 5-4
LOAD	Adjusted per paragraph 5-4
PRESELECTOR	Adjusted per paragraph 5-4
BAND SELECTOR	Desired band
Tuning Dial	Set to desired frequency

The plate voltage meter indicates 1.7 KV (1700 VDC).

B. Assuming that the transmitter has been properly loaded and tuned to frequency as described in the basic transmitter tune-up procedure, switch the OPERATION control from REC to MOX. The plate current meter indicates 0.2 ampere. Advance the RF control (transmitter group) until the screen current reaches maximum. If the screen current is 10 to 20 MA. and the plate current meter indicates between 0.4 and 0.5 ampere the loading is correct. Make one final adjustment of the PLATE control and PRESELECTOR control for maximum screen current to be sure the transmitter is in tune. Make this a habit – it saves tubes and puts a cleaner signal on the air. Return the RF control to zero (full CCW).

C. Switch the FUNCTION control to either USB or LSB depending upon the sideband to be used for transmission and reception. The plate current meter now indicates zero and the receiver is back in operation.

D. Switch the METER control to the AALC position. Press the microphone push-to-talk button. The plate current meter now indicates 0.2 ampere. Speak into the microphone at a normal voice level and advance the AF control (transmitter group) until the meter pointer on the transceiver panel begins to kick up to approximately S-3 to S-5 on voice peaks. This is the correct working level. Use this meter

switch position when operating SSB to monitor the SSB transmissions. The microphone gain control setting will be found to be less critical because of the compression action of the AALC circuitry; however, the actual control setting still depends upon the type of microphone, the operator's voice characteristics, and his operating habits. Sufficient microphone gain has been built into the Model SR-2000 Transceiver to handle the usual range of levels associated with communications type microphones.

E. Release the microphone switch button. The transceiver returns to the receive function and the plate current drops to zero. The meter on the transceiver now monitors the strength of the incoming signals in the usual "S" units of measurement; S-9 represents approximately a 50-microvolt signal.

F. HIGH POWER SSB OPERATION. When operating single sideband, two power input levels are available. The tune-up and low power sideband operation are carried out with the High Power/Low Power switch on the Model P-2000 Power Supply set at SSB LOW POWER-CW-TUNE (1700 VDC supply voltage). When operating with single sideband phone transmissions the operator may use the SSB HIGH POWER position (2700 VDC supply voltage), after he has determined that the low power operation is performing to his satisfaction. Do not tune-up or transmit continuous carrier signals (CW) in the SSB HIGH POWER switch position. There are no final amplifier loading tests or adjustments required when switching from low power to high power operation. The only change in control setting that may be required is an increase in the AF control setting to accommodate the higher plate voltage. Again adjust for the AALC meter deflection on voice peaks. Always switch to SSB LOW POWER-CW-TUNE to make any tuning adjustments.

5-7. VOICE CONTROLLED SSB OPERATION.

The operating procedures outlined for basic transmitter tune-up (paragraph 5-4) and push-to-talk sideband operation (paragraph 5-6) also apply for voice controlled single sideband operation. The following adjustments, therefore, are intended to apply only to the adjustment of the VOX control system.

To avoid unintentional transmission while adjusting the VOX system controls, set the AF (transmitter group) control at zero (Full CCW) and press the HIGH VOLTAGE OFF button to disable the final amplifier plate supply.

A. Turn the four transceiver cabinet cover screws 1/4 turn to loosen the fasteners and lift the top cover clear to gain access to the VOX controls.

B. Initially set the VOX, DELAY and ANTI-TRIP controls fully counterclockwise.

C. Set the OPERATION control at VOX and the FUNCTION control at either the USB or LSB position.

D. Turn the VOX control clockwise, while talking into the microphone, until the VOX control relay closes on the first syllable of speech. The transceiver will transfer from receive mode to transmit mode when the relay closes. Use just enough VOX gain to accomplish the desired results, too much gain will make the system over sensitive to speaker feedback and too little sensitivity will place a relatively high signal level at the antenna change-over relay contacts at the time it switches over to transmit.

E. Adjust the DELAY control for the desired drop-out delay. The delay period increases as the DELAY control is turned clockwise. The delay period should be long enough to prevent change-over between words but not long enough to miss the other operator's quick reply.

F. Set the receiver AF control for the desired listening level and advance the ANTI-TRIP control (clockwise) until the received signals do not actuate the VOX control relay. Excessive anti-trip gain or a major increase in the established listening level may lock out the voice control system.

G. With the VOX controls adjusted, either method of control may be selected by setting the OPERATION control at MOX for manual control or at VOX for voice control. To place the transmitter in operation, restore the high voltage and reset the transmitter AF gain control watching the AALC metering as you speak into the microphone.

H. Replace the cabinet cover and turn the screws 1/4 turn clockwise to lock the cover in place.

NOTE

Some microphones, equipped for push-to-talk control, have shorting contacts in the switch to disable the microphone element when the push button is released. VOX operation will not be feasible unless this circuitry is disconnected within the microphone.

SECTION VI
THEORY OF OPERATION

6-1. GENERAL.

The Model SR-2000 Transceiver consists of a double conversion receiver and double conversion transmitter. To achieve true on frequency transceiver operation, the VFO, heterodyne crystal oscillator, and carrier frequency oscillators all contribute to the transmit and receive functions. In addition, the 6.0 – 6.5 MC IF amplifier and 1650 KC IF amplifier stage associated with the crystal lattice filter all function for both modes.

Circuitry that would be compromised, performance wise, to accomplish common usage between the transmit and receive function is avoided in the design of the Model SR-2000 Transceiver.

Refer to figure 9 for the block diagram of the system and to figures 21 and 22 for schematic details.

6-2. RECEIVER SECTION.

The signal (f1) at the antenna connector is fed to the receiver RF amplifier stage (V1) through the antenna change-over relay (K1) located in the transmitter final amplifier section. The signal is amplified and passed on to the first receiver mixer (V2A), where it is heterodyned to frequency (f2) which is the difference between the heterodyne crystal oscillator (V12) frequency (X1) and the signal frequency (f1). The resulting variable IF signal (f2) falls between 6.0 MC and 6.5 MC. The RF amplifier and first receiver mixer tuned circuits are selected by the BAND SELECTOR switch and tuned by the PRESELECTOR control capacitor.

The variable IF signal (f2) is amplified by a broad band IF amplifier (V3A) and then heterodyned to the second IF frequency of 1650 KC (f3) by mixing with the VFO (variable frequency oscillator) (V13 and V4B) in the second receiver mixer (V4A).

With the NOISE BLANKER control set at OFF, the second IF signal (f3) is amplified by the first 1650 KC IF amplifier and blanker stage (V6) in a conventional manner. When the NOISE BLANKER control is adjusted for maximum noise rejection, the noise amplifier stage (V5A) samples and amplifies the 6.0 to 6.5 MC noise and signal (f2). The signal and noise pulses in this path are then detected and shaped into positive going pulses with diode CR7. The detected signal, which is now predominantly noise pulses, is amplified by the pulse amplifier stage (V5B). The negative going pulses are then fed to grid No. 3 of the pentagrid type first 1650 KC IF amplifier and blanker tube (V6) with diode CR6 acting as a steering diode to prevent positive pulses from reaching grid No. 3. Pulse modulation of the IF amplifier and blanker stage, momentarily interrupts the second IF signal (f3) during noise bursts with no apparent discontinuity of reception because of the relatively short pulse duration.

The 1650 KC IF signal (f3) now passes through the crystal lattice filter (FL1) to further reject the unwanted signals on either side of the desired signal and is again amplified by the second 1650 KC IF amplifier (V7A). At this stage the signal path is split, one path feeds the signal to the product detector (V9A), the other path feeds the signal to the AGC amplifier stage (V8A).

The product detector stage (V9A) heterodynes the 1650 KC signal (f3) with one of the two carrier oscillator frequencies (X3) to shift the signal frequency to the audio frequency range. The choice of carrier oscillator frequency (X3) determines whether the upper sideband or lower sideband group of frequencies are detected, since the crystal lattice filter response relative to the carrier frequency (X3) causes the unwanted sideband group of frequencies in each case to be rejected before reaching the product detector.

Normally, shifting the carrier oscillator frequency (X3) to obtain upper and lower sideband reception would also entail shifting the receiver dial setting to receive the opposite sideband of a signal frequency (f1) at the antenna input.

The Model SR-2000 system shifts the VFO frequency (X2) electrically with varicap CR13 when the 1651.550 KC carrier oscillator frequency is switched on for upper sideband reception (or transmission). Shifting the VFO frequency by an amount equal to the difference between the two carrier oscillator frequencies (X3), or 3 KC, the received suppressed carrier frequency (f1) is received at the same dial setting for both upper and lower sidebands.

The 1650 KC IF signal (f3) fed to the AGC amplifier stage (V8A) is amplified and detected to supply the negative DC bias voltage (AGC) used

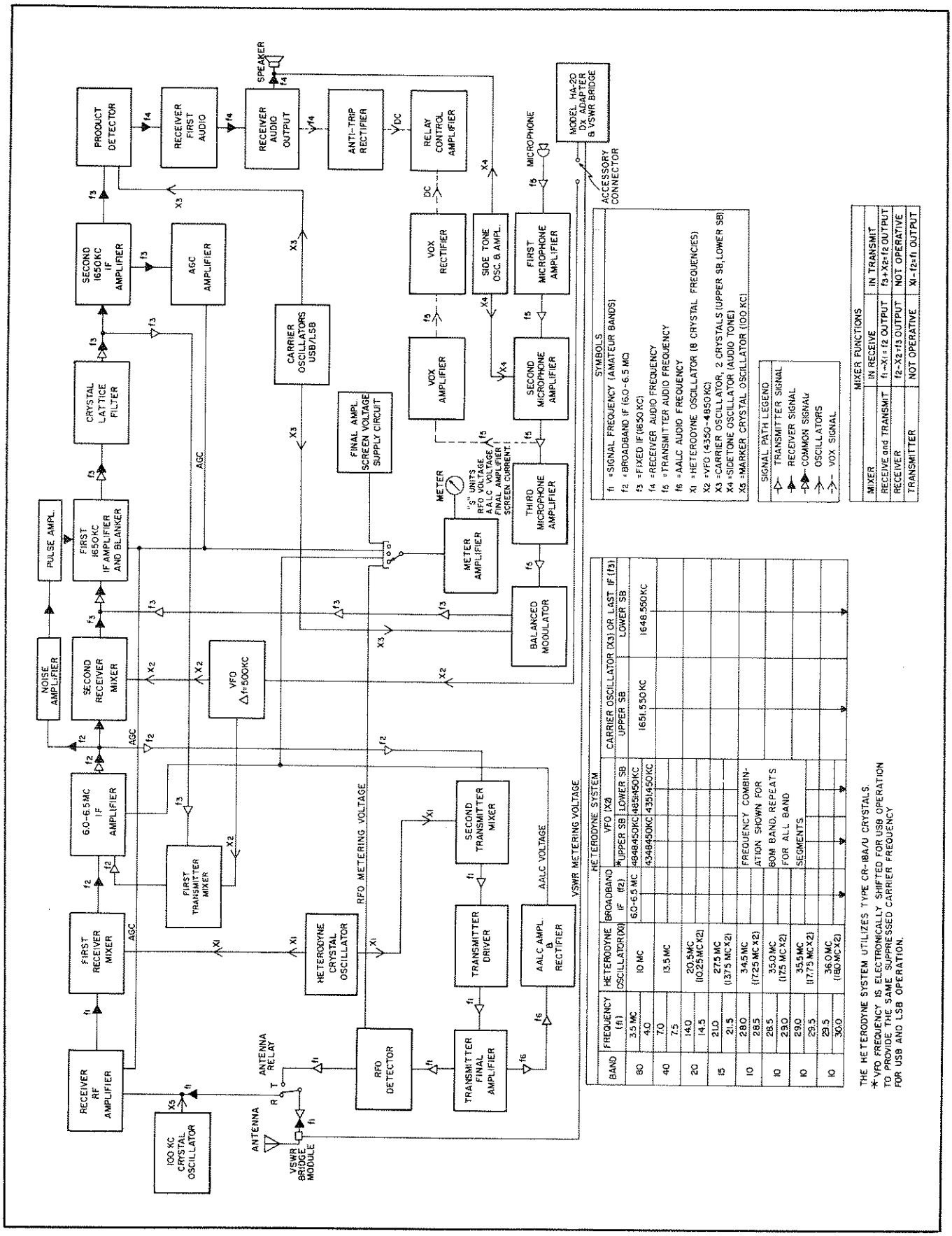

156-007108B

Figure 9. Block Diagram of Transceiver.

to control the gain of the receiver RF amplifier stage (V1) and first 1650 KC IF amplifier and blanker stage (V6). The signal level at which gain control takes effect is controlled by the AGC THRESHOLD control R46.

The detected audio frequency signal amplitude is controlled by the AF gain control, R4B, and amplified to speaker level by the first audio amplifier stage (V9B) and audio output stage (V15). Two audio output impedances are available for external use; 500 ohms at the phono jack at the rear apron or 3.2 ohms at the PHONES jack on the front panel.

6-3. TRANSMITTER SECTION

The audio frequency signal (f5) generated by the microphone is amplified with a three stage audio amplifier (V19A, V19B and V14B). The audio frequency signal (f5) then modulates the selected (USB/LSB) carrier oscillator signal (X3) in the balanced modulator stage (CR19 and CR20) to produce a double sideband suppressed carrier signal (f3) near 1650 KC. The double sideband signal (f3) is then amplified by the first 1650 KC IF amplifier and blanker stage (V6) with the blanker system disabled during the transmit function.

The unwanted sideband of the double sideband signal is attenuated by more than 50 DB as the signal passes through the crystal lattice filter (FL1) and a single sideband suppressed carrier signal results. The signal is blocked for the transmit function at the second 1650 KC IF amplifier stage (V7A) with bias voltage switching and the signal proceeds on to the first transmitter mixer stage (V2B).

At the first transmitter mixer stage the signal (f3) is heterodyned with the VFO carrier frequency (X2) to produce a signal frequency (f2) in the 6.0 to 6.5 MC frequency range. The signal frequency filters through the bandpass circuits of the 6.0 – 6.5 MC IF amplifier (V3A) and on to the second transmitter mixer (V11A) because in the transmit mode it is blocked at the second receiver mixer (V4A).

The intermediate frequency signal (f2) is again heterodyned with the heterodyne crystal oscillator frequency (X1) to produce the final transmitter output signal frequency (f1). The signal at output frequency (f1) is amplified by the transmitter driver stage (V18) and final amplifier stage (V16 and V17) to the desired power level.

The output signal is fed through the PI network in the final stage to transform its impedance to the antenna transmission line impedance (50 ohms nominal), and from the output of the PI network it is conducted through the antenna change-over relay (K1) to the common antenna connector.

6-4. RIT CONTROL.

Receiver Incremental Tuning is applied at the VFO stage since this stage is one of the three frequency determining elements in the system for both the transmit and receive function.

The varicap (CR13) in the VFO stage is a solid state device whose effective capacity varies with the DC bias potential applied across its terminals. By carefully regulating the bias supply potential with the zener diode (CR14) to obtain frequency stability, the VFO frequency may be varied a small amount with a potentiometer type control.

For normal operation as a transceiver system, the CAL ADJ. potentiometer (R90) is used to set the VFO frequency as a dial calibration control. When Receiver Incremental Tuning (RIT) is desired, the VFO frequency is controlled by setting the varicap bias with the RIT panel control (R91). The varicap bias voltage is switched by the VOX relay (K2) so that the CAL ADJ. potentiometer (dial calibration) sets the VFO frequency when transmitting, regardless of the RIT ON/OFF panel switch (S7) setting. This, of course, keeps the transmitter at the dial frequency and allows independent tuning of the receiver for a few kilocycles either side of the dial frequency when desired.

6-5. METERING.

The transceiver circuits are metered by three meters, one multipurpose meter in the Model SR-2000 unit and two meters in the Model P-2000 Power Supply unit. The two meters in the power supply unit monitor the final amplifier plate voltage (0-5 kilovolts DC) and the plate current (0-1 Ampere). The meters are connected into their respective circuits at a low potential point to avoid an operational shock hazard.

The multipurpose meter (M1) in the Model SR-2000 Transceiver unit has a three-position selector switch (S2) which provides for metering the system as follows:

In positions No. 1 and No. 2 the meter is connected into a bridge circuit with the meter amplifier tube (V8B) forming one arm of the bridge and the METER ZERO control R120 providing the meter zero adjustment arm for bridge balance.

When the transceiver is in the receive mode, the AGC voltage developed on signal is fed to the meter amplifier tube grid to unbalance the bridge and provide a log scale deflection for metering antenna signal levels. The meter is calibrated in the customary "S" units up to S-9 and in DB over S-9 with S-9 representing approximately 50 microvolts at the antenna terminals.

When the transceiver is in the transmit mode, switch position No. 1 connects the meter amplifier tube grid to the diode detector (CR16) circuit in the output of the final amplifier stage which rectifies a portion of the RF voltage developed across the antenna transmission line. (Diode CR17 in this circuit is a directional gate to keep the resistor R103 from loading the AGC buss.) The meter scale is not calibrated in volts RMS for this application since the tune-up procedure requires only that the operator know when he has obtained maximum RF voltage across the antenna terminals.

When the transceiver is in the transmit mode, switch position No. 2 connects the meter amplifier tube grid to the AALC control grid voltage buss. The meter then measures the AALC grid voltage developed when the final amplifier stage is driven into the grid current levels during SSB operation. No calibrated meter scale is required to monitor the AALC action since the meter deflection obtained is used only to indicate the presence and not the value of grid current on voice peaks.

In switch position No. 3 the meter circuit is active only in the transmit mode. The switch has now taken the meter out of the bridge circuit and connected it to the final amplifier screen voltage supply to meter the screen grid current in a conventional meter shunt type circuit. Resistor R118 in the transceiver unit and resistor R318 in the power supply unit form the shunt resistor complement with the metering taking place in the ground return side of the screen voltage supply. The meter scale carries a 0-25 milliampere calibration to monitor the screen current drawn by the final amplifier tubes.

6-6. AALC SYSTEM.

The Amplified Automatic Level Control circuits are in effect only in the transmit mode. To properly employ the peak power capability of the linear power amplifier, the stage must be driven up to and slightly into the control grid current region and yet not over-driven into unwanted distortion known as "flat-topping" the envelope.

AALC action goes into effect when transmitting single sideband signals at peak levels where control grid current begins to flow in the final amplifier tubes (V16 and V17). The grid current pulses generate a small signal voltage across the resistance in the bias supply BIAS ADJ. control (R114). The signal voltage is amplified to usable levels by the AALC amplifier tube (V3B) and then rectified by diodes CR4 and CR5 to become a varying DC bias voltage. The bias voltage is then fed to the 6.0 — 6.5 MC IF amplifier stage (V3A) grid to reduce the stage gain as the AALC bias voltage increases. The control voltage is also fed to the meter amplifier tube (V8B) grid to actuate the meter as a warning device. (METER switch set at AALC.) The "AVC" action on the IF amplifier stage makes the transition from desired drive level to over-driven less critical and a smoother more powerful signal results.

6-7. VOX CONTROL.

The Model SR-2000 Transceiver features automatic control of the receive-transmit change-over function for either SSB phone or CW code operation. For either mode of operation, automatic control is placed in operation when the OPERATION control is set at VOX. When operating SSB the change-over from receive to transmit starts with the first syllable spoken into the microphone. The audio signal (f5) is amplified by the first and second microphone amplifier stages (V19A and V19B) and the VOX amplifier stage (V20A). The amplified audio signal (f5), with its gain adjusted by the VOX control (R150), is then rectified with diodes CR21 and CR22. The positive DC control voltage developed is applied to the grid of the relay amplifier stage (V20B) to actuate the VOX control relay K2 placing the transmitter on the air.

The diode load resistors R154 and R155 (DELAY control) and the storage capacitor C210 determine the drop-out time or delay available to keep the transmitter active between the spoken words by sustaining the positive DC control voltage supplied to the relay tube grid.

The sound from the receiver's speaker that reaches the microphone would normally trigger the VOX relay when it wasn't wanted. To avoid this condition, a sample of the receiver audio (f4) is taken from the plate of the receiver audio output tube (V15) and rectified with diode CR15 to develop a negative DC anti-trip voltage.

This potential when adjusted for correct amplitude by the ANTI-TRIP control (R93) and fed to the grid of the relay tube (V20B) cancels the positive DC control voltage generated by the VOX diodes in the microphone amplifier stages. As a result the relay does not close when the microphone picks up sound from the speaker. When the operator adds his voice to the system, however, the positive DC control voltage developed by the VOX amplifier diodes increases and exceeds the established anti-trip potential and the relay closes as desired.

When operating with keyed CW, the change-over from receive to transmit starts with the closing of the key. The keying system operates on the blocked-grid keying principle, therefore when the key is closed, several stages in the transmitter are keyed ON simultaneously; namely, the transmitter driver stage (V18), the second transmitter mixer stage (V11) and the sidetone amplifier stage (V7B). The keyed sidetone signal (X4) is fed into the second microphone amplifier stage (V19B) as well as the speaker, through the output transformer (T5), for sidetone monitoring purposes. The sidetone signal fed to the second microphone amplifier stage (V19B) passes through the VOX amplifier and rectifier circuits to actuate the VOX control relay (K2) in the same manner as for SSB VOX control. The anti-trip circuit is disabled by the OPERATION switch (S4A) in the CW position since its function is not required for CW operation.

The VOX delay circuits, for CW operation, hold the transmitter in the active state between short breaks during CW keying but will release the control relay for receiver operation at the end of transmission. The delay period for CW control is adjusted, as for SSB, by the DELAY control (R155).

SECTION VII
SERVICE DATA

WARNING

LETHAL VOLTAGES ARE PRESENT IN THE MODEL SR-2000 AND MODEL P-2000 UNITS. NEVER DEFEAT THE SAFETY INTERLOCKS OR WORK INSIDE THE CABINETS WITH PRIMARY POWER CONNECTED.

7-1. COVER AND CHASSIS REMOVAL.

A. Top Cover Removal.

Loosen the four top-cover screws 1/4 turn only and lift cover clear. To replace the cabinet cover, line up the plastic nuts with the cabinet slots, seat the cover and tighten the cover screws 1/4 turn only. The plastic nuts can be damaged by over tightening.

B. Bottom Cover Removal.

Remove the four bottom cover screws located near the cabinet feet and remove the cover. Should the mounting screws be misplaced, use 6-32 x 3/16 inch replacement screws. Screws longer than 3/16 inch will bottom against the chassis before securing the bottom cover.

C. Chassis Removal.

Disconnect all rear chassis cables. Remove both top and bottom cabinet covers. Remove the four cabinet screws at the bottom of the cabinet, near the corners of the chassis, and carefully slide the chassis and panel assembly out the front of the cabinet.

7-2. TUBE AND DIAL LAMP REPLACEMENT.

Access to all tubes, except the two final amplifier tubes, may be had by removing the top cabinet cover. Refer to paragraph 7-1A.

To service the dial lamps, the panel and chassis assembly must also be released from the cabinet and shifted forward far enough to expose the dial lamp assemblies. Remove the four cabinet screws at the bottom of the cabinet, in the corners of the chassis, to release the chassis assembly.

7-3. FINAL AMPLIFIER TUBE REPLACEMENT.

Access to the final amplifier tubes may be had by removing the top cabinet cover (paragraph 7-1A) and removing the final amplifier compartment cover, held in place by five screws. Note that the rear edge of the compartment cover is clipped to the rear lip of the chassis structure. When replacing the cover, be sure to engage the clip properly and line up the interlock stud on the cover with the interlock plunger before replacing the mounting screws.

The power tubes may be lifted straight up out of their sockets after disengaging the plate clips and moving the parasitic suppressors to one side. The tube chimneys need not be disturbed. Do not disturb the neutralizing tab near the plate of tube V17.

CAUTION

BE EXTREMELY CAREFUL WHEN REMOVING OR INSERTING THE TYPE 8122 POWER TUBES. CAREFULLY ALIGN THE BASE AND SOCKET KEYING AND INSERT THE TUBES GENTLY INTO THE SOCKETS. MAKE SURE THE TUBES ARE PROPERLY SEATED AND THE PLATE CAPS ARE RECONNECTED SECURELY.

7-4. PLATE CONTROL RESTRINGING PROCEDURE.

Remove the cabinet top cover (paragraph 7-1A) and final amplifier compartment cover (five screws), to gain access to the PLATE control drive mechanism. Note that the rear edge of the compartment cover is clipped to the rear lip of the chassis structure. When replacing the cover, be sure to engage the clip properly and line up the interlock stud on the cover with the interlock plunger before replacing the mounting screws.

Restring the plate capacitor drive system with 50 pound test dacron cord or equivalent, following the arrow and letter sequence in figure 10. Maintain a spring expansion of approximately 1/2-inch on the dial cord spring.

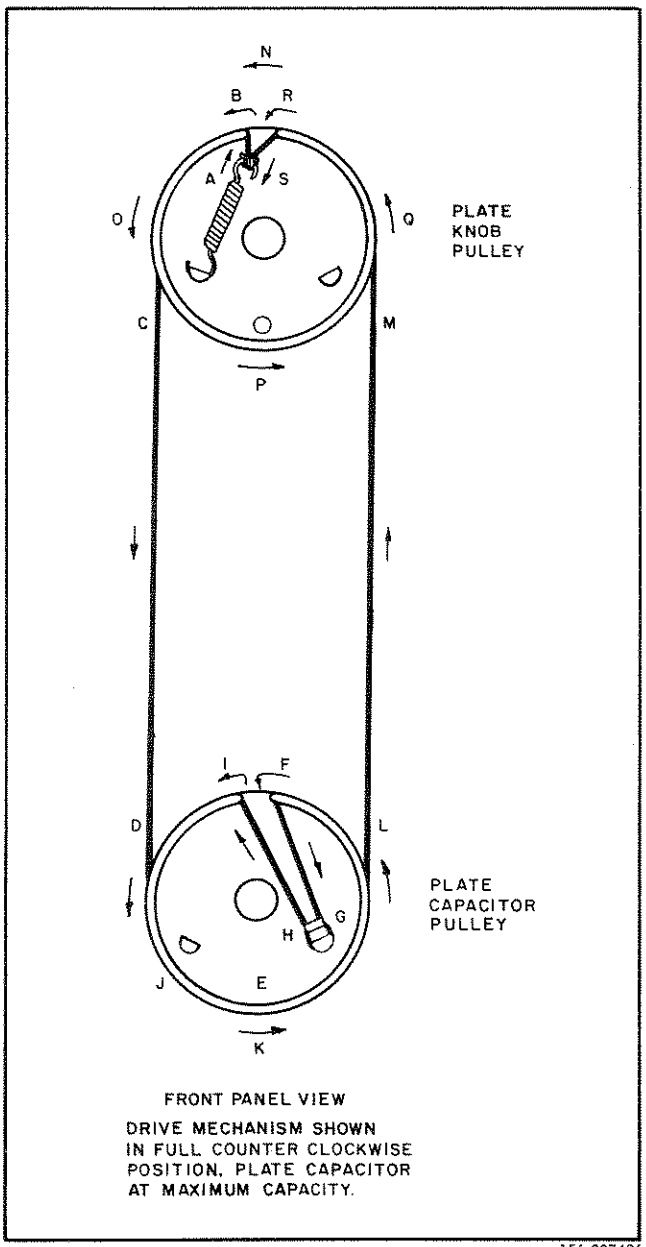

Figure 10. Plate Control Restringing Diagram.

After completing the stringing operation, rotate the PLATE control knob counterclockwise until the plate tuning capacitor is completely meshed (maximum capacity) and, if necessary, loosen the knob set screw and re-index the knob at 1 on the panel calibration scale.

7-5. TROUBLESHOOTING.

In the design of this transceiver, full consideration was given to keep maintenance problems at an absolute minimum. As in all well designed electronic equipment, maintenance and repair problems are generally confined to the checking and replacement of tubes and semiconductor devices which may become defective. Malfunctions of this nature are usually easily isolated and corrected. However, it is entirely possible that a more obscure malfunction may arise. In this event, only thoroughly trained technical personnel should attempt to service equipment of this complexity.

A recommended aid to troubleshooting the Model SR-2000 Transceiver is a general coverage receiver which can be used to provide a quick check on the various oscillator circuits within the SR-2000. A lead connected to the antenna of this receiver, when placed in the proximity of the oscillator tube in the circuit to be checked, can determine the presence or absence of signal from the stage in question.

If a malfunction occurs when operating on one particular band and/or mode of operation, the unit should be checked on all other bands and in all other modes of operation to isolate the difficulty. A careful study of the block diagram (figure 9) will give a quick clue as to which tubes should be checked. The voltage and resistance charts (figures 11 and 12) and schematic diagrams (figures 21 and 22) will also aid in isolating and correcting a malfunction.

7-6. SERVICE AND OPERATING QUESTIONS.

For further information regarding operation or servicing of the Model SR-2000 Transceiver, contact the dealer from whom the unit was purchased. The Hallicrafters Company maintains an extensive system of Authorized Service Centers where any required service will be performed promptly and efficiently at no charge if this equipment is delivered to the service center within 90 days from date of purchase by the original buyer and the defect falls within the terms of the warranty. It is necessary to present the bill of sale in order to establish warranty status. After the expiration of the warranty, repairs will be

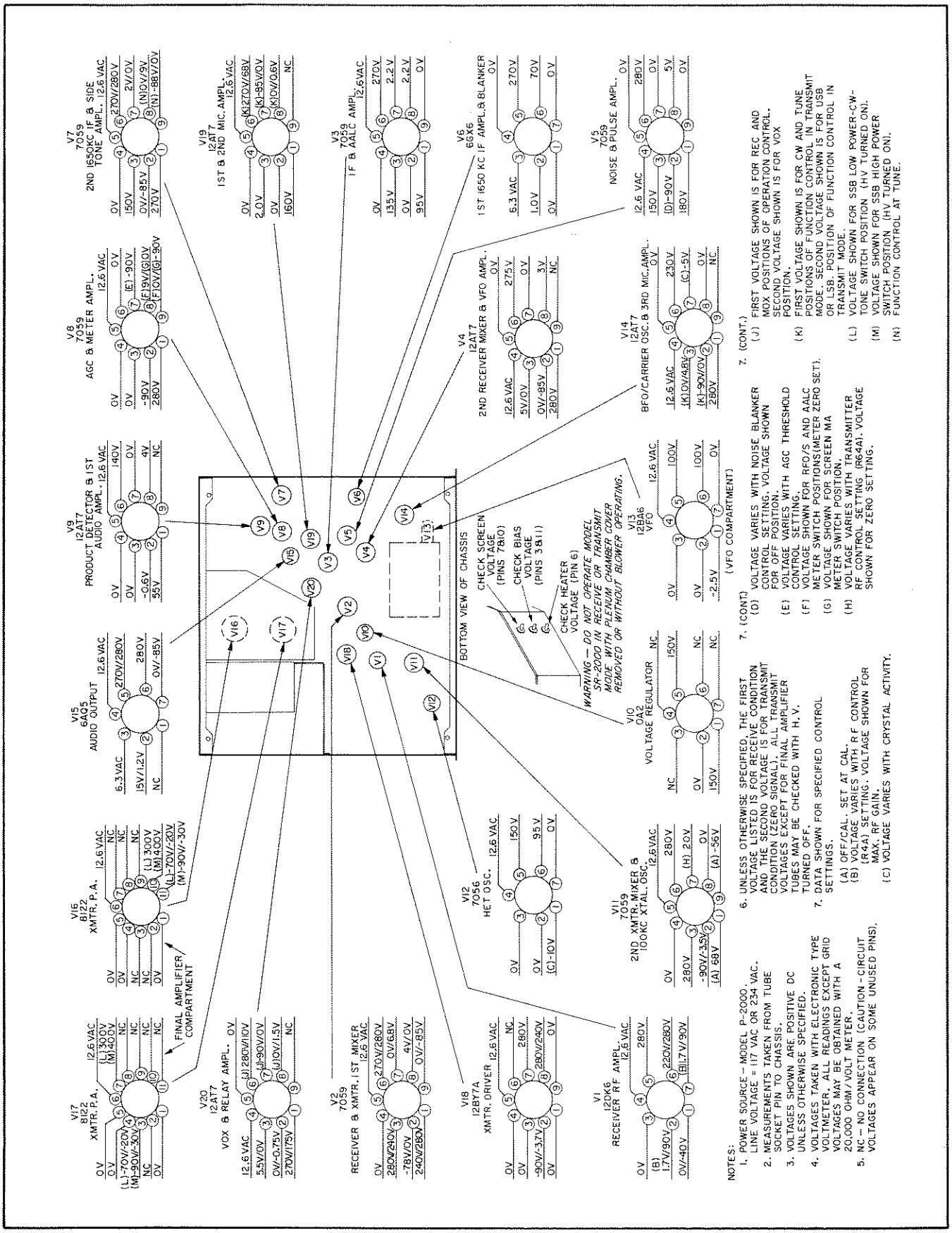

156-007425B

Figure 11. Model SR-2000 Voltage Chart.

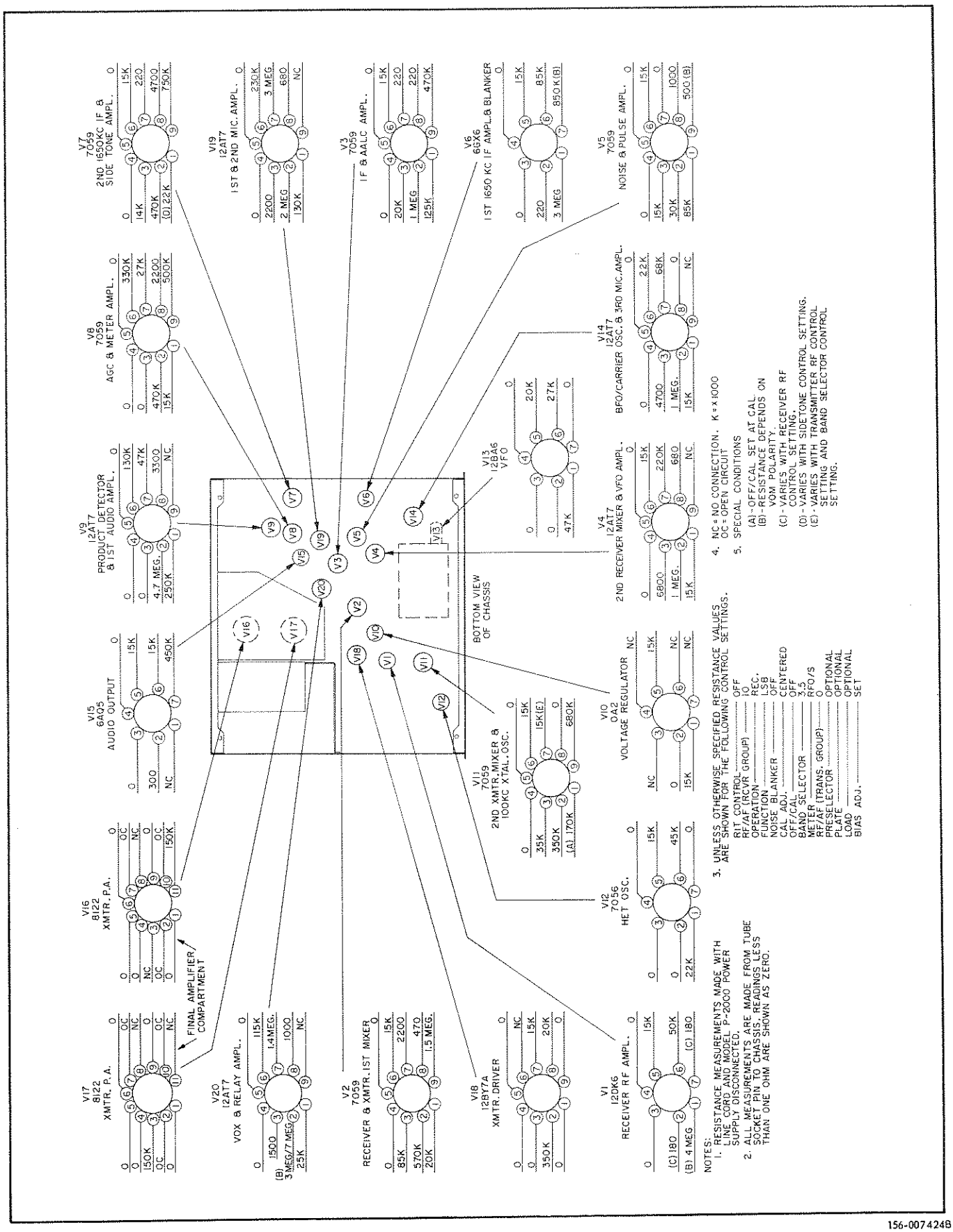

156-007424B

Figure 12. Model SR-2000 Resistance Chart.

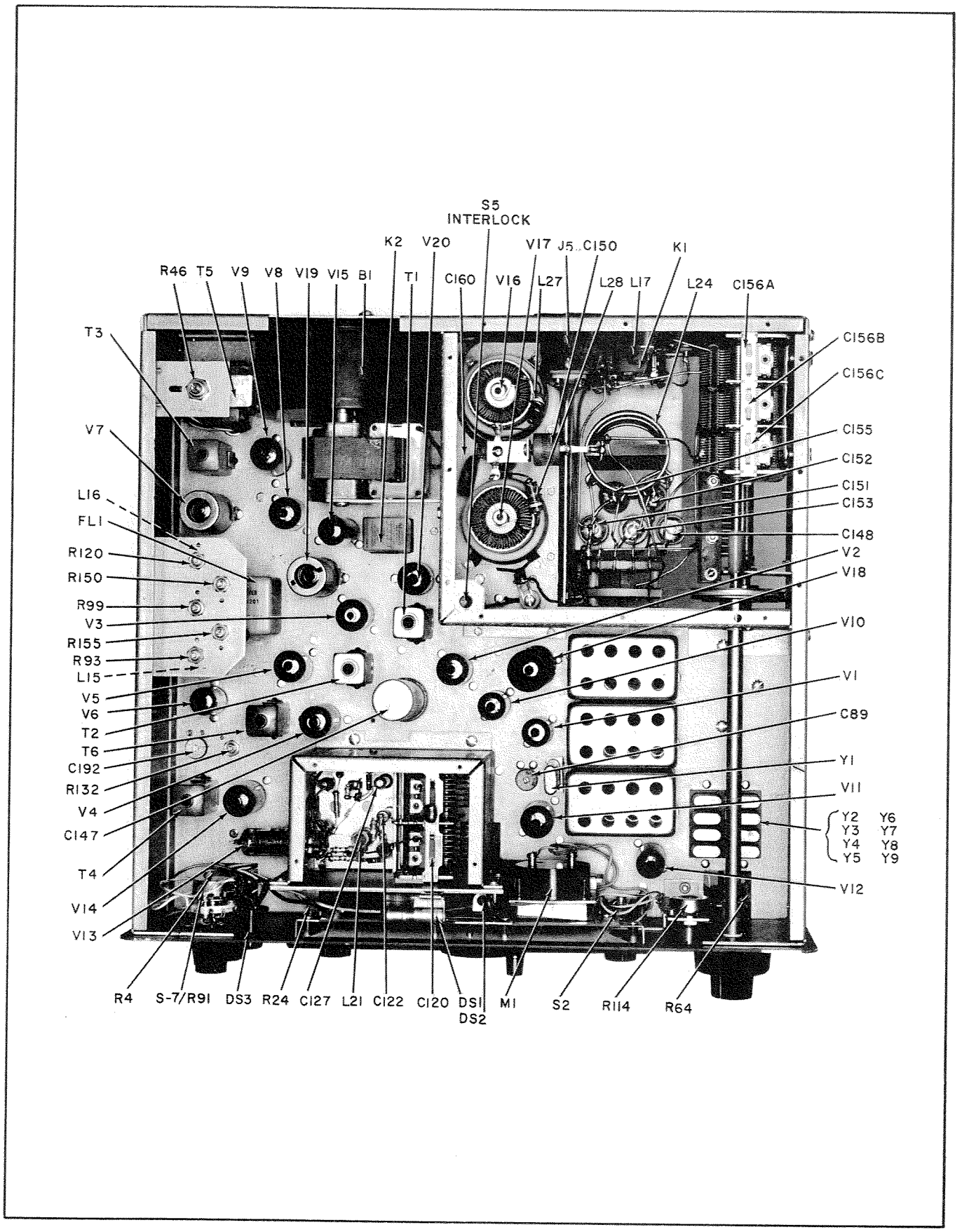

156-007333

Figure 13. Model SR-2000 Top View, Component Location.

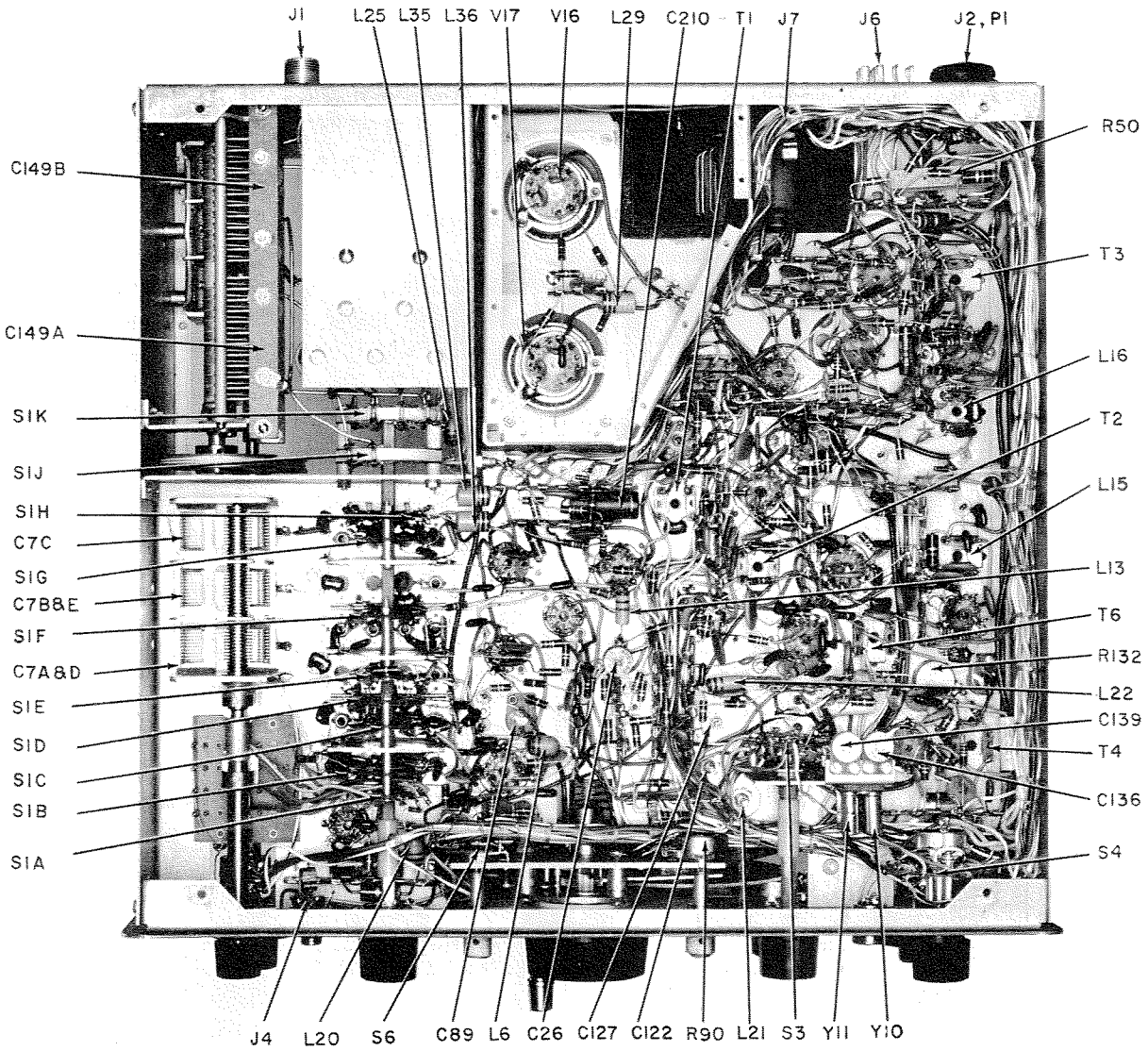

156-007335

Figure 14. Model SR-2000 Bottom View, Component Location.

made for a nominal charge. All Hallicrafters Authorized Service Centers display the sign shown at right. For the location of the one nearest you, consult your dealer or your local telephone directory.

Make no service shipments to the factory unless instructed to do so by letter, as the Hallicrafters Company will not accept responsibility for unauthorized shipments.

The Hallicrafters Company reserves the privilege of making revisions in current production of equipment, and assumes no obligation to incorporate such revisions in earlier models.

Authorized hallicrafters Service Center Communications Equipment

SECTION VIII
ALIGNMENT PROCEDURE

WARNING

THE VOLTAGES USED IN THE MODEL SR-2000 AND MODEL P-2000 ARE LETHAL. AVOID UNNECESSARY EXPOSURE TO HIGH VOLTAGE CIRCUITS WHEN MAKING CIRCUIT ADJUSTMENTS OR VOLTAGE CHECKS. ENERGIZE THE HIGH VOLTAGE CIRCUITS ONLY WHEN THE CHECK REQUIRES THE APPLICATION OF FINAL AMPLIFIER STAGE PLATE AND SCREEN POTENTIALS. SERIOUS RADIO FREQUENCY BURNS WILL RESULT IF THE PLATE OR ANTENNA OUTPUT ENDS OF THE FINAL AMPLIFIER PI NETWORK ARE CONTACTED WHILE TRANSMITTING.

CAUTION

Never operate the Model SR-2000 Transceiver as a transmitter without a matched antenna or adequate dummy load termination. Illuminating lamps will not present a constant load impedance. The power amplifier tubes and PI network components can be damaged if the equipment is operated as a transmitter unloaded.

8-1. GENERAL.

The Model SR-2000 Transceiver has been carefully aligned and tested at the factory and, with normal usage, should not require other than the usual attention given to electronic equipment. Service or replacement of a major component or circuit may require subsequent realignment, but under no circumstances should realignment be attempted unless the malfunction has been analyzed and definitely traced to misalignment. Service work should only be performed by persons experienced in this work, using the proper test equipment.

NOTE

Do not make any adjustments unless the operation of the transceiver is fully understood and adequate test equipment is available. Refer to figures 13 and 14 for parts locations and to figures 15 and 16 for the location of all alignment adjustments.

8-2. EQUIPMENT REQUIRED.

1. RF Signal Generator; Hewlett-Packard Model 606A, or an equivalent signal generator having up to one volt output at an impedance of 50 to 70 ohms and a frequency coverage to 30 MC.

2. A Vacuum Tube Voltmeter (VTVM); Hewlett-Packard Model 410B, or equivalent VTVM having an RF probe good to 40 MC.

3. A dummy load; 50 ohms non-reactive; rated at 1000 watts average power. Bird Wattmeter or equivalent.

4. AF Signal Generator. Hewlett-Packard Model 200 AB, or equivalent.

5. AF Voltmeter; Ballentine Model 300, or equivalent capable of measuring 1 to 5 millivolt level.

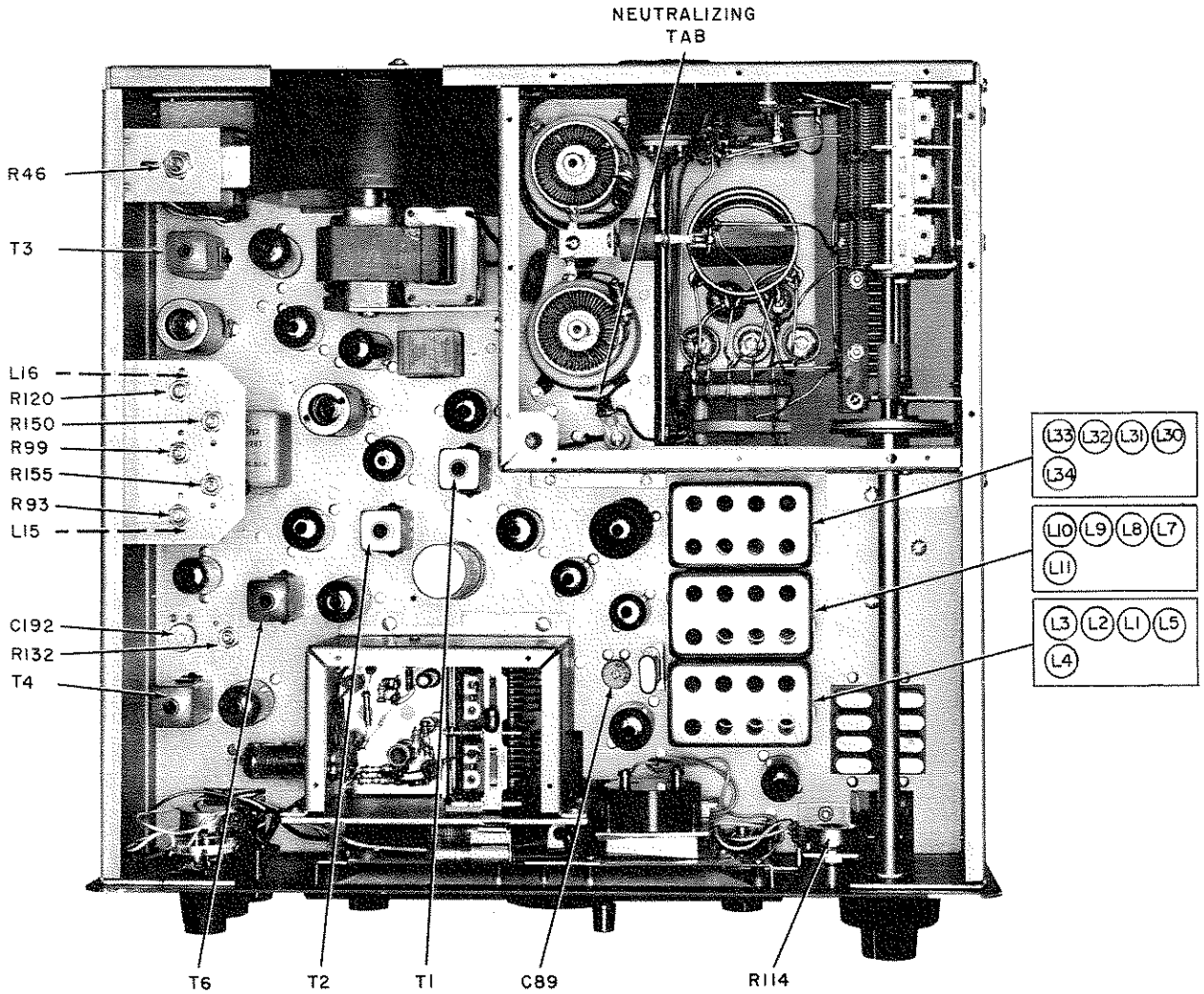

156-007332

Figure 15. Model SR-2000 Top View, Alignment Adjustments.

6. A general coverage receiver covering the frequency range from 3 to 30 MC with a 100 KC calibrator.

8-3. BIAS ADJUSTMENT.

The final amplifier bias must be checked and if necessary set before any extensive checks are made on the transmitter portion of the Model SR-2000. Correctly setting the bias will insure normal operating plate dissipation for the final amplifier tubes. Adjust the BIAS ADJ. control located on the front panel of the transceiver unit as follows:

A. Set the OPERATION control at REC. and allow the transceiver time to reach operating temperature. Pre-set the following controls as indicated:

FUNCTION . . . . . TUNE

RF (transmitter group) . . . . At zero (Full CCW)

AF (transmitter group) . . . . At zero (Full CCW)

High Power/Low Power . . . SSB LOW POWER-CW-TUNE

B. Press the HIGH VOLTAGE ON button. The PLATE VOLTS meter indicates approximately 1700 VDC, and the red HIGH VOLTAGE warning indicator lights. If the high voltage does not come on, either the High Power/Low Power switch is not set at SSB LOW POWER—CW—TUNE or the delay relay in the power supply has not had sufficient time to close. Allow reasonable warm-up time before checking the bias setting or resetting the BIAS ADJ. control.

C. Set the OPERATION control at MOX. The PLATE CURRENT meter will indicate 0.2 ampere if the bias is correct. If adjustment is required set the BIAS ADJ. control (R114) for 0.2 amperes. Idle plate current is always set at 0.2 amperes with zero transmitter output. If the RF control is set full counterclockwise the RF output will be zero.

8-4. "S"-METER ZERO ADJUSTMENT.

The "S" meter will require a zero adjustment if it does not indicate between zero and S-1 in the receive mode with the RF control full CCW, or if it does not indicate zero RFO in the transmit mode with zero RF output. The adjustment procedure is as follows:

A. Remove the cabinet cover per paragraph 7-1A.

B. Place the transceiver in the transmit mode (FUNCTION control at TUNE, OPERATION control at MOX) and RF (transmitter group) control full CCW for zero output.

C. Set METER switch at RFO/S and adjust the METER ZERO control (R120) for the "S" meter zero or pointer rest position.

D. Set OPERATION control at REC and turn the RF (receiver group) control full CCW. The "S" meter should read between S-0 and S-1. If not, adjust the AGC THRESHOLD control (R46) for an "S" meter reading just above zero and less than S-1. Replace the cabinet cover.

8-5. CARRIER BALANCE.

The transceiver should be allowed to reach operating temperature before making the carrier balance adjustments. Remove the top cabinet cover per paragraph 7-1A to gain access to the carrier balance adjustments C192 and R132. See figure 15.

A. Tune-up the transceiver for SSB operation using an antenna load or dummy load for the transmitter.

B. Turn the AF control (transmitter group) fully counterclockwise to remove all audio from the modulator stage. With the FUNCTION switch set at either of the USB/LSB positions, close the microphone PTT switch and adjust the carrier balance controls (capacitor C192 and potentiometer R132) for minimum RFO voltage (METER switch at RFO/S).

C. The RFO meter on the transceiver will drop to zero near the true null. A more exacting balance may be obtained by connecting the Model HP-410B VTVM RF probe across the transceiver antenna output and observing the RFO voltage on the 1V RMS scale or by tuning a receiver, having an "S" meter, to the transmitted frequency. In either case, adjust the balance controls for minimum carrier level while switching the FUNCTION control back and forth between the two sideband positions to obtain a good null for both sidebands.

8-6. CRYSTAL CALIBRATOR ADJUSTMENT.

CAUTION

DISABLE THE HIGH VOLTAGE WHEN PERFORMING THE FOLLOWING ADJUSTMENTS.

The crystal calibrator trimmer (C89) is used to warp the 100 KC crystal exactly to frequency by comparing its harmonic frequency with the signal transmitted by station WWV. Place the

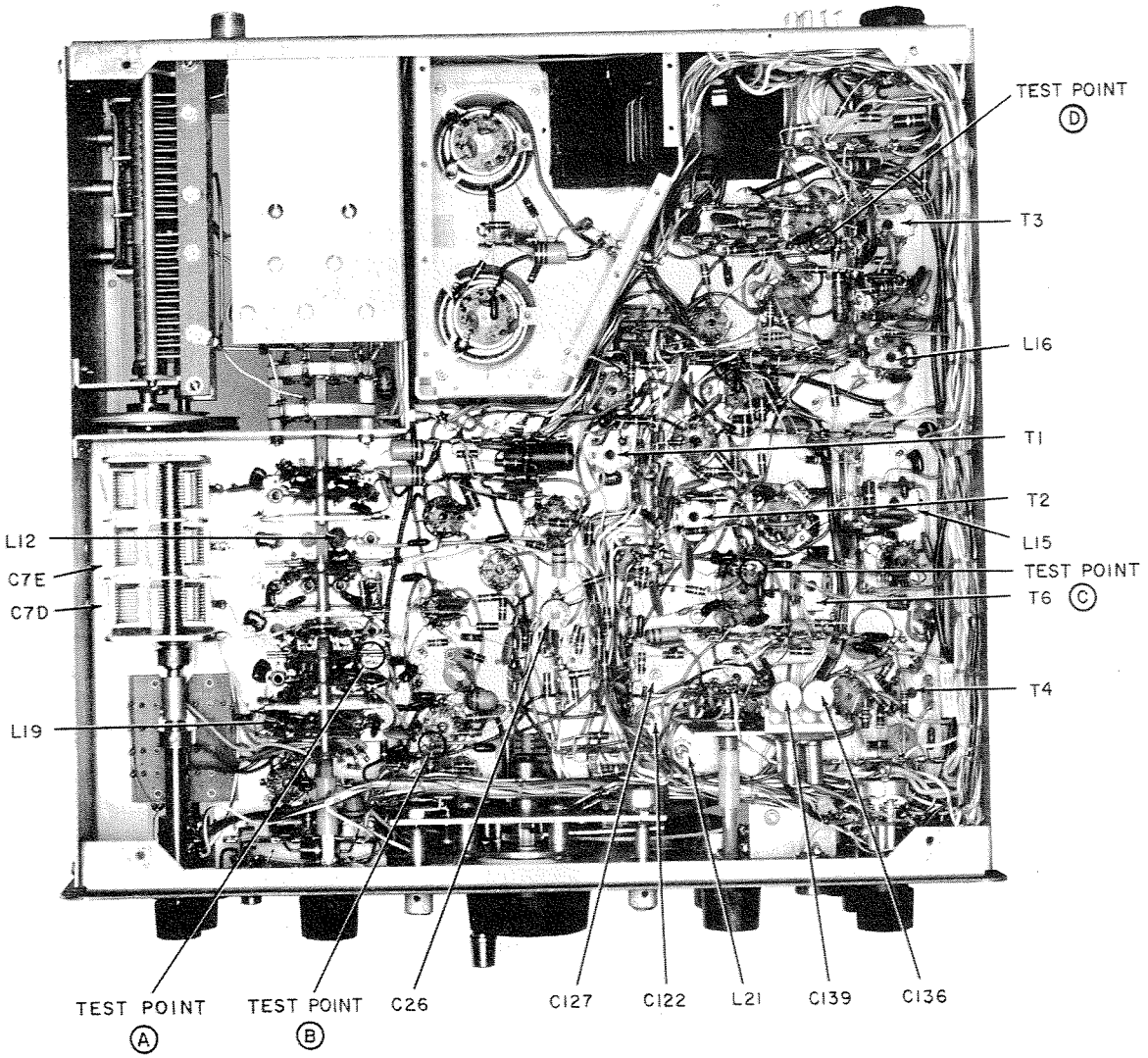

156-007334

Figure 16. Model SR-2000 Bottom View, Alignment Adjustments.

transceiver in the receive mode. (OPERATION control at REC and FUNCTION control at USB or LSB). With a general coverage receiver, tune in station WWV and connect a wire lead between the Model SR-2000 antenna connector (antenna cable disconnected) and the antenna lead of the general coverage receiver. Set the OFF/CAL switch at CAL to activate the crystal calibrator, and carefully adjust the calibrator trimmer (C89) until the 100 KC oscillator harmonic is at zero beat with station WWV. This adjustment should be made only during periods of no modulation on station WWV's signal, to avoid confusing beats with the modulation frequencies.

8-7. FINAL AMPLIFIER NEUTRALIZATION.

A. Neutralization Check.

Run the neutralization check with the transceiver in its cabinet (all hardware in place) and terminated in a dummy load (or antenna with low VSWR). Tune up the transceiver in the CW mode (Refer to paragraphs 5-4 and 5-5) at the following frequencies:

3900 KC	14,250 KC	28,750 KC
7250 KC	21,300 KC	

Adjust the RF control (transmitter group) for 120 VRMS RF output. (Approximately equal to S-5 to S-7 on the RFO meter if an RF voltmeter is not available.) Carefully tune the PLATE control through resonance and observe the plate current dip (PLATE CURRENT meter) and RF output voltage maximum (RFO meter or VTVM). If both occur at the same setting or with an error of less than 5 VRMS out of the 120 VRMS reference level, the amplifier stage is neutralized.

B. Neutralizing the Model SR-2000.

NOTE

Neutralization adjustments should be made on the 15M Band at approximately 21.3 MC.

If the neutralization check outlined above indicates a need for adjustment, remove the top cabinet cover and the cover over the final amplifier compartment to gain access to the neutralizing tab located near tube V17. Refer to paragraph 7-3 for cover removal details.

Proceed as outlined for the neutralization check and adjust the gap between the neutralizing tab and the plate structure of tube V17, until the plate current dip and the RF output voltage maximum coincide at each of the frequencies shown in step A.

The top cabinet cover does not have to be in place for the neutralization check, however the final compartment cover must be in place to operate the safety interlock and also supply the RF shielding required.

CAUTION

DO NOT DEFEAT THE SAFETY INTERLOCK OR OPEN THE FINAL AMPLIFIER COMPARTMENT WITH THE HIGH VOLTAGE CIRCUITS ENERGIZED. THE NEUTRALIZING TAB IS AT 280 VOLTS DC AT ALL SETTINGS OF THE OPERATION CONTROL EXCEPT OFF.

The PRESELECTOR control calibration has an effect on the neutralization pattern. If only one or two check frequencies indicate a neutralization problem, a PRESELECTOR calibration correction may be indicated rather than a neutralizing tab adjustment. Refer to paragraph 8-12 for the mixer and driver stage alignment details.

8-8. VFO CALIBRATION ALIGNMENT.

A. Mechanical Index.

As each 100 KC mark on the main dial indexes with its fiducial, the zero mark on the knob dial should also index with its fiducial. If there is a fixed error between these dials, remove the tuning knob with a No. 8 Bristol set screw wrench to expose the knob dial bushing. Set the main dial to any 100 KC mark. Loosen the knob dial set screw with a No. 6 Bristol set screw wrench and rotate the knob dial with respect to the knob shaft until the zero mark lines up with its fiducial. Tighten the set screw. Replace the knob with approximately 1/32-inch clearance between the knob and panel.

If a service operation involved disconnecting the VFO gang from the gear drive, re-index the gang as follows:

1. Rotate the tuning knob clockwise to the mechanical stop.

2. Loosen the two No. 6 Bristol set screws holding the drive gear to the VFO gang shaft.

3. Rotate the gang capacitor to fully mesh the capacitor and tighten one of the set screws.

4. Rotate the knob exactly 30 KC in the counterclockwise direction.

5. Loosen the set screw again and without disturbing the VFO gang setting, turn the tuning knob clockwise to the knob dial zero. (The main dial will now also be indexed at the high frequency end of the dial.)

6. Tighten both set screws securely and replace the VFO compartment cover, before recalibrating the VFO electrically.

B. VFO Calibration (Trimmer Adjustment Only).

A trimmer capacity correction is indicated if the dial calibration check across the dial, at the 100 KC check points, consistently falls to one side of the fiducial and cannot be corrected by the CAL ADJ. control. The main dial and knob dial must be correctly indexed as outlined in paragraph 8-8A and the calibration check should be run with the FUNCTION control set at LSB. Recalibrate the VFO as follows:

1. Remove the bottom cabinet cover per paragraph 7-1B to gain access to the adjustment screw of trimmer C122. See figure 16 for location of the trimmer.

2. Set the BAND SELECTOR at 3.5, OPERATION at REC., FUNCTION at LSB, PRESELECTOR at 80M segment, OFF/CAL. at CAL, NOISE BLANKER at OFF, and RIT CONTROL at OFF.

3. Center the CAL. ADJ. control. The dot on the knob should fall at top dead center.

4. Set the dial for exactly 3500 KC. (Red 500 on main dial and black zero on knob dial.) Carefully adjust trimmer C122 for zero beat.

5. Check calibration across the dial at the 100 KC check points. If the frequency error is less than approximately 2000 CPS, the calibration is within acceptable limits. If the error increases and exceeds 2000 CPS at the high frequency end of the dial, the VFO will require a coil adjustment in addition to the trimmer adjustment.

C. VFO Calibration (Trimmer and Coil Adjustment).

If the dial error progressively increased in the same direction with the high frequency end of the dial running out more than 2000 CPS, both coil L21 and trimmer C122 will require adjustment. Recalibrate the VFO as follows:

1. Set the transceiver controls per steps 2 and 3 in paragraph 8-8B.

2. Set tuning dial for exactly 4000 KC (VFO = 4351.450 KC) and adjust coil L21 for zero beat.

3. Set tuning dial for exactly 3500 KC (VFO = 4851.450 KC) and adjust trimmer C122 for zero beat.

4. Repeat steps 2 and 3 until both the 3500 KC and 4000 KC settings are exactly on frequency.

5. Check the calibration across the dial at the 100 KC points. If the frequency error is less than 2000 CPS, the calibration is within acceptable limits. If the error is in excess of 2000 CPS at any of the mid-points, with the end limits at zero error, the VFO capacitor C120 should be "knifed". This operation should not be attempted by other than qualified personnel thoroughly familiar with the technique.

6. Set the dial at 3800 KC and tune to exact zero beat with the marker crystal. Switch the FUNCTION control from LSB to USB. If the frequency shifts more than 15 CPS, the VFO corrector trimmer C127 must be adjusted per paragraph 8-8D.

D. VFO Corrector Adjustment.

The VFO corrector trimmer, C127, shifts the VFO frequency approximately 3000 CPS to correct for the difference in frequency between the upper and lower sideband BFO/carrier crystal frequencies. The trimmer is switched into the VFO circuit in the upper sideband mode. To check the corrector trimmer setting, tune the transceiver, in the LSB mode, to zero beat with the 3800 KC marker frequency. Switch to USB mode. There should be less than a 15 CPS change in frequency. If the change is more than 15 CPS, carefully adjust trimmer C127 until the differences between USB and LSB is less than 15 CPS.

8-9. IF ALIGNMENT (1650 KC).

This operation consists of adjusting transformers T3 and T6 only. Do not adjust the filter terminations (L15 and L16) at this time. Refer to paragraph 8-10 for the crystal filter alignment.

The signal source for alignment may be obtained from an RF signal generator (at 1650 KC) or the transceiver can be tuned to the 100 KC crystal calibrator signal in the 20M band. (Any 100 KC marker.) If an RF signal generator is used, connect its output to pin 2 of the second receiver mixer tube (V4A). Test point (C). (See figures 16 and 22.)

Set the OPERATION control at REC., FUNCTION control at either USB or LSB, NOISE BLANKER at OFF, and METER switch at RFO/S. Adjust the RF control or signal generator output

(no modulation) for about S-7 on the "S" meter and tune either the transceiver or signal generator (whichever method is used) for maximum "S" meter deflection.

With the signal now centered in the crystal filter pass band, adjust transformer T3 (top and bottom cores) and transformer T6 (single core) for maximum "S" meter deflection. Maintain the S-7 level to avoid overloading effects. Do not run the cores through the individual transformer windings (T3) so that either core rests between the windings and upsets the design coupling.

8-10. CRYSTAL FILTER ALIGNMENT.

A. The filter response should be checked as follows to determine whether or not the filter termination coils L15 and L16 need adjustment.

1. Tune up the transceiver, in the transmit mode, into a 50 ohm dummy load. (3800 KC is recommended.)

2. Connect the AF signal generator to the microphone input and monitor the input voltage with the Ballantine voltmeter. Set the AF signal generator at 1000 CPS and adjust the generator level for 50 volts RMS RF output with the AF control (transmitter group) set near maximum (approximately 9).

3. Set the FUNCTION control at LSB.

4. Maintain constant AF signal generator input voltage and change the frequency of the generator above and below 1000 CPS, recording the frequency at which the transmitter RF output voltage drops to 25 volts RMS (-6 db). Also note the maximum and minimum RF voltage excursions between these two frequencies. A normal 6 db frequency response will run 500 CPS or less at the low end, 2400 CPS or more at the high end, and less than 2 db variation (10 volts RMS change) in the pass band.

5. Repeat the check made in step 4 with the FUNCTION control set at USB.

B. If the check made in paragraph 8-10A above indicates a need for filter termination adjustment, one of two methods may be employed.

1. The test set up above may be used to evaluate the pass band ripple and the terminating coils, L15 and L16, then adjusted for minimum in band ripple while maintaining maximum RF output. If the terminations were disturbed and a major increase in RF output is obtained with adjustment, reset the AF signal generator level to maintain the 50 volt RMS reference at 1000 CPS.

2. The pass band ripple may also be observed by operating the transceiver in the receive mode. Tune in the 100 KC calibrator crystal at 3800 KC and adjust the RF control (receiver group) for an S-7 "S" meter reading. Tune through the filter pass band and adjust the filter termination coils (L15 and L16) for minimum in band ripple while maintaining maximum "S" meter deflection. If the terminations were disturbed and a major increase in "S" meter reading results, readjust the RF control to maintain the S-7 reference level.

8-11. IF ALIGNMENT (6.0 – 6.5 MC).

This operation consists of adjusting transformers T1 and T2 as follows:

A. Remove the heterodyne oscillator tube (V12) and connect the HP410B VTVM RF probe to test point (B) (Pin 2 of the second transmitter mixer tube V11A). See figures 16 and 22.

B. Place transceiver in transmit mode with the high voltage disabled. Set OPERATION control at MOX, FUNCTION control at TUNE, BAND SELECTOR at 3.5, and adjust RF control (transmitter group) for 1 VRMS at VTVM at the peak of the response.

C. Tune the VFO across the band and note the VTVM readings. If the response is essentially flat, with no more than 2 db to 3 db roll off at each end of the band, the alignment is OK.

D. If adjustment is required, adjust transformers T1 and T2 (top and bottom cores) for maximum grid voltage as well as a flat response across the band. Avoid a tilted response or a response that rolls off beyond the 2 db to 3 db limit at the edges of the VFO dial settings. Do not sacrifice gain by stagger tuning the transformers, to obtain a constant grid voltage across the band, or run a core through the winding which would upset the design coupling. A properly aligned amplifier will have equal drop in the response at each end of the band but will not exceed 3 db (70% transmission).

E. Replace the heterodyne oscillator tube V12 and disconnect the VTVM.

8-12. ALIGNMENT OF TRANSMITTER MIXER/DRIVER AND RECEIVER ANTENNA STAGES.

The final amplifier bias adjustment must be properly set per paragraph 8-3 before extensive operation of the transmitter is attempted. It is assumed that the signal generating stages of the Model SR-2000 are functioning properly. Use the

internally generated signal of the transceiver to align the transmitter mixer and driver stages and the RF signal generator to align the receiver antenna stage as follows:

A. Connect the 50-ohm dummy load and VTVM RF probe to the ANTENNA jack (J1). Connect the RF signal generator termination to test point A. (See figures 16 and 22.) Connect the signal lead to the receiver antenna coaxial cable termination at switch wafer S1D (4th wafer from front) and the ground lead to the first shield plate. Connect the AF voltmeter across the 500 ohm audio output transformer winding at the RCVR AUDIO jack (J3) located at the rear chassis apron. This arrangement will now permit transmitter and receiver operation without connecting and disconnecting test equipment repeatedly during alignment.

B. If the trimmer capacitors on the three section gang (C7) have not been previously aligned at the factory, preset trimmers C7D and C7E approximately one-half turn from tight.

C. Set the RF control (transmitter group) at zero, OPERATION control at MOX, FUNCTION control at TUNE, and HIGH VOLTAGE ON. (Set plate voltage selector switch in SSB LOW POWER-CW-TUNE position.)

D. Set the BAND SELECTOR control at 28, the VFO at 28000 KC, the PRESELECTOR control at the left edge of the 15-10M segment, and the final amplifier LOAD control at 5. Advance the RF control and adjust the final amplifier PLATE control for resonance. Maintain an output signal level of 50 volts RMS at the VTVM with the RF control and adjust coils L7 and L30 for maximum output at the dummy load. Reduce the transmitter output to zero with the RF control.

E. Set the OPERATION control at REC., RF and AF controls (receiver group) at maximum (10), RIT control at OFF, and NOISE BLANKER at OFF. Do not change the VFO setting and PRESELECTOR control setting set up in step D. Tune the RF signal generator to 28,000 KC and adjust it for approximately 1000 CPS beat note. Use just enough signal generator output (approximately one microvolt for an aligned unit) to keep from developing AVC voltage (no "S" meter indication). Adjust coil L5 for maximum audio output without developing AVC voltage.

F. Set the BAND SELECTOR control at 29.5, the VFO at 30,000 KC the final amplifier LOAD control at 5-1/2, and the OPERATION control at MOX. Advance the RF control (transmitter group) and tune the final amplifier PLATE and PRESELECTOR controls to resonance. Maintain an output signal level of 50 volts RMS at the VTVM with the RF control and adjust trimmer C7E for maximum output at the dummy load. Reduce the transmitter output to zero with the RF control.

G. Set the OPERATION control at REC. and without changing the VFO or PRESELECTOR control setting, tune the RF signal generator to 30,000 KC and obtain the 1000 CPS beat note. Control the signal generator output and adjust trimmer C7D for maximum audio output at the AF voltmeter without developing AVC voltage (No "S" meter indication).

H. Repeat steps C, D and E to peak out the coil adjustments for the 10 meter band.

I. Set the BAND SELECTOR at 3.5, the VFO at 3500 KC and the PRESELECTOR at the left edge of the 80M segment. Set the final amplifier LOAD control at 3. Set the OPERATION control at MOX, advance the RF control (transmitter group) and adjust the final PLATE control for resonance. Maintain the 50 volt RMS output signal level with the RF control and adjust coils L11 and L34 for maximum output at the dummy load. Reduce the output to zero with the RF control.

J. Set the OPERATION control at REC. and without changing the VFO or PRESELECTOR control settings, tune the RF signal generator to 3500 KC and obtain the 1000 CPS beat note. Control the signal generator output and adjust coil L4 for maximum audio output at the AF voltmeter without developing AVC voltage.

K. Repeat the procedure given in steps I and J for the 40M, 20M, and 15M bands. Refer to the RF ALIGNMENT CHART for specific control settings and adjustments for each of the bands. For each band, set the PRESELECTOR control at the left edge of the band segment when adjusting the coils for that band.

L. Set the BAND SELECTOR at 7.0, the OPERATION control at REC., the VFO at ~~7000~~ 7250 KC. Tune the RF signal generator at ~~7000 KC~~ 7250 KC for the 1000 CPS beat note and tune the PRESELECTOR control for maximum ~~AF voltage~~. Audio Output Reset the RF signal generator frequency to 6.5 MC, increase the signal generator output by approximately 40 db, and adjust its frequency for the 1000 CPS beat note. Set the signal generator output for approximately 10 volts RMS audio output and adjust the 6.5 MC trap coil L12 and trimmer C26 for minimum audio output. If the core adjustment in trap coil L12 is shifted considerably to achieve rejection, the setting of coil L10 may be affected. Repeat the alignment procedure shown in step K for coils L10, L33, and L3 in the 40M band to insure correct alignment.

M. Set the BAND SELECTOR at 7.0, the OPERATION control at REC, and the VFO at 7250 KC. Tune the RF signal generator at 7250 KC for a 1000 CPS beat note and tune the PRESELECTOR control for maximum audio output. Use a low level output from the signal generator (approxi-

L. CONTINUED. USE A LOW LEVEL OUTPUT FROM THE SIG GENERATOR (APP 1 MICRO VOLT) SO THAT NO AGC VOLTAGE IS DEVELOPED. RESET THE SIG GENERATOR TO 6.250 KHZ INCREASE ITS OUTPUT TO 60 DB. ADJUST ITS FREQUENCY FOR A 1000 HERTZ BEAT NOTE. ADJUST THE 6.250 MHZ TRAP COIL (L39) FOR MINIMUM AUDIO OUTPUT.

mately one microvolt) so that no AGC voltage is developed. Reset the signal generator frequency to 6250 KC and increase its output by approximately 60 DB. Adjust its frequency for a 1000 CPS beat note. Now adjust the 6.25 MC trap coil (L39) for minimum audio output.

RF ALIGNMENT CHART (MIXER-DRIVER STAGES)

Band Selector	Transceiver VFO Setting	Final Ampl. Load Setting	Adjust For Maximum RF Output In Transmit	
3.5	3500 KC	3	L11	L34
7.0	7000 KC	3-1/4	L10	L33
14	14000 KC	5	L9	L32
21	21000 KC	4-1/4	L8	L31
28	28000 KC	5	L7	L30
29.5	30000 KC	5-1/2	C7E	—

RF ALIGNMENT CHART (RECEIVER ANTENNA STAGE)

Band Selector	Transceiver VFO Setting	RF Signal Generator	Adjust For Maximum AF Voltage In Receive
3.5	3500 KC	3500 KC	L4
7.0	7000 KC	7000 KC	L3
14	14000 KC	14000 KC	L2
21	21000 KC	21000 KC	L1
28	28000 KC	28000 KC	L5
29.5	30000 KC	30000 KC	C7D

8-13. BFO/CARRIER OSCILLATOR ALIGNMENT.

This operation consists of adjusting the core of carrier oscillator transformer T4 and setting the crystal warping trimmers, C136 and C139, to place the oscillator exactly on frequency.

A. Set the core of transformer T4 before setting the oscillators to frequency. Connect the VTVM RF probe at test point D (pin 8 of the product detector tube V9A) (see figures 16 and 22). Set the OPERATION control at REC and check the injection voltage at test point D for both LSB and USB settings of the FUNCTION control. If the injection voltages measured are approximately 2.5 volts RMS and the crystal oscillators start without hesitation in either sideband position, no adjustment should be necessary. If adjustment is required, set the core of transformer T4 for approximately 80 percent of the peak RMS voltage obtained, on the high frequency side of the peak output setting of the core. That is, turn the core counterclockwise from the peak output voltage setting. Switch the FUNCTION control between USB and LSB to check the starting capabilities of the oscillators. If the core is set as described, both oscillators will start without hesitation.

B. The BFO/carrier oscillator frequencies have been accurately set at the factory to 1651.550 KC (USB) and 1648.550 KC (LSB) with the aid of an electronic counter connected to test point D. If an electronic counter is available, set the OPERATION control at REC and the FUNCTION control at LSB. Set trimmer C136 for exactly 1648.550 KC. Set FUNCTION control at USB and set trimmer C139 for exactly 1651.550 KC. Following the frequency adjustment, recheck the VFO corrector adjustment per paragraph 8-8D.

Without the electronic counter it would be well to leave trimmers C136 and C139 untouched. If it is necessary to replace crystals Y10 and Y11 for any reason, make the VFO corrector adjustment per paragraph 8-8D.

8-14. HETERODYNE CRYSTAL OSCILLATOR ALIGNMENT.

The heterodyne crystal oscillator injection may be checked in the following manner to determine whether or not the core of coil L19 requires adjustment. Connect the VTVM RF probe to test point B (pin 2 of the second transmitter mixer tube V11A). See figures 16 and 22. Disable the VFO injection by removing VFO tube V13. Set the OPERATION control at MOX (HIGH VOLTAGE disabled) and the FUNCTION control at TUNE. Record the RMS injection voltage for all settings of the BAND SELECTOR control. Injection is normal if the injection voltage measures 2.0 to 2.5 VRMS on 80M and 40M, 1.0 to 1.2 VRMS on 20M and 15M, and 0.75 to 1.0 VRMS on the 10M segments.

If adjustment is required, set the core of coil L19 to obtain 2 volts RMS or more on 80M and 40M, and 0.75 volts or more on the 10M segments. The 15M and 20M bands will automatically fall into line around the 1 volt RMS level.

SECTION IX
MODEL P-2000 POWER SUPPLY

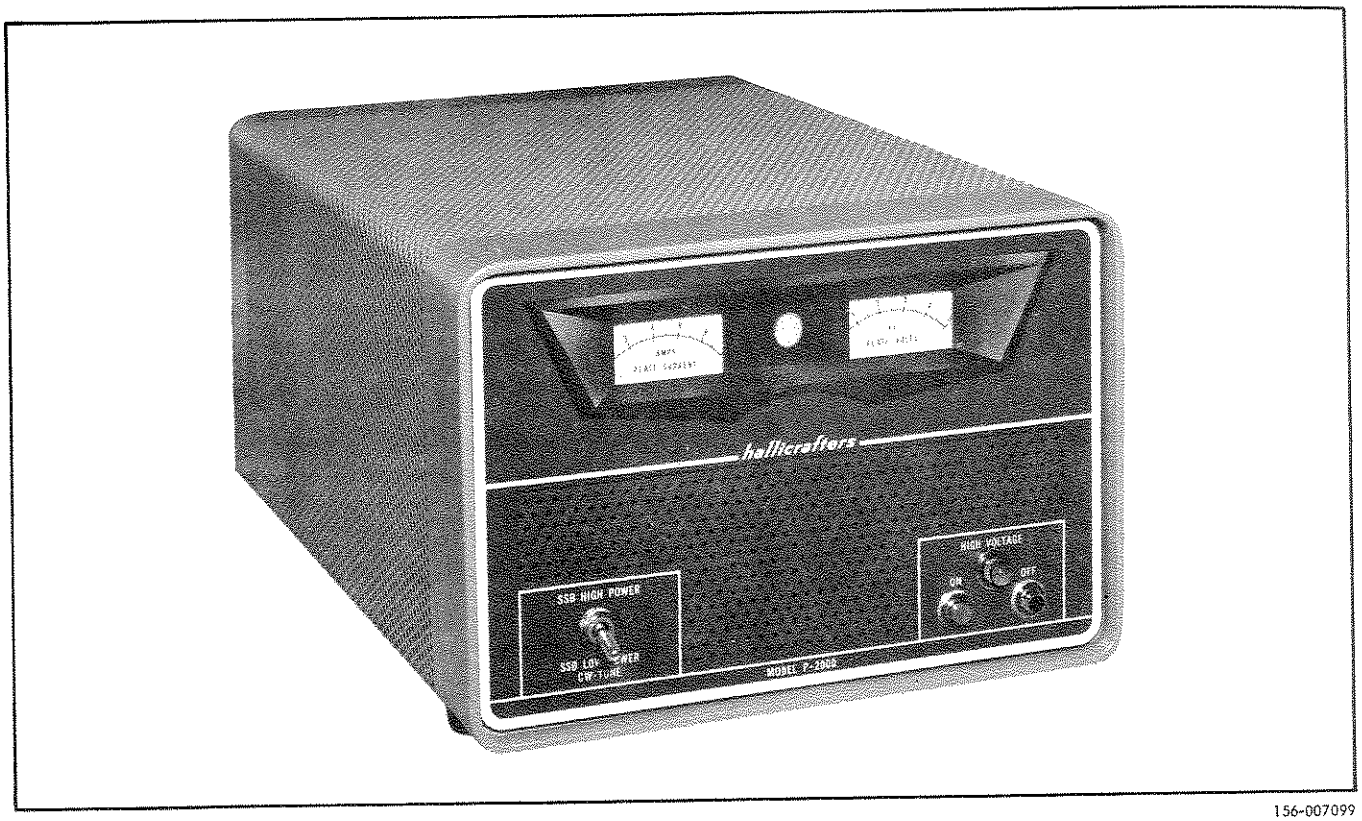

156-007099

Figure 17. Hallicrafters' Model P-2000 Power Supply.

9-1. DESCRIPTION.

The Model P-2000 Power Supply is a companion unit to the Model SR-2000 Transceiver and provides all supply voltages required by the transceiver. The application of the final amplifier anode and screen potentials is controlled at the power supply unit by the high voltage selector switch (SSB HIGH POWER/SSB LOW POWER-CW-TUNE) and high voltage control switch (HIGH VOLTAGE ON-OFF). The power supply also contains the station speaker and final amplifier plate metering facilities for the transceiver. Two meters provide for monitoring the final amplifier plate current (0-1 ampere) and plate voltage (0 to 5 kilovolts). The metering circuits employed, permit the meter cases to operate at ground potential, thereby avoiding a shock hazard.

Solid state silicon rectifiers are employed throughout for cool maintenance free operation. The low voltage circuits such as heater supply, low B+, receiver audio, etc., are carried in one cable with a 12-pin connector, while the final amplifier plate and screen supply voltages are carried in a separate cable and plug termination to provide a maximum safety factor.

The power supply is shipped from the factory with the line cord wired and fitted with the plug for 115-volt 2-wire service. A line cord plug is also supplied for use with 230-volt 3-wire service.

Line protection is provided by two 12-ampere fuses wired so that they operate in series from a 230-volt AC source and in parallel from a 115-volt AC source. The use of one size fuse for either source voltage avoids the possibility of incorrect line protection.

9-2. UNPACKING.

After unpacking the Model P-2000 Power Supply, examine it carefully for possible damage that may have occurred in transit. If the equipment has been damaged, file a claim immediately with the carrier, stating the extent of the damage. Carefully check all shipping labels and tags for special instructions before removing or destroying them.

The power supply unit is shipped on a wood platform to support its weight. To remove the shipping platform, carefully turn the power supply

unit over and set it down bottom side up. When handling the power supply, keep in mind that it weighs around 60 pounds. Remove the four shipping platform mounting screws (No. 10 x 3/4-inch) and lift the platform clear. Mount the four cabinet feet with No. 10 x 1/2-inch screws and flat washers supplied. The cabinet feet are fastened to the cabinet and chassis in the same mounting holes that were used for attaching the shipping platform. Be sure to install the flat washers between the cabinet feet and the heads of the screws. DO NOT USE THE NO. 10 x 3/4-INCH SHIPPING PLATFORM HARDWARE TO FASTEN THE CABINET FEET. Set the power supply back on its feet.

9-3. POWER SOURCE.

The Model P-2000 Power Supply for the Model SR-2000 Transceiver is designed to operate from either 115-volt, 2-wire, or 230-volt, 3-wire 60 cycle single phase service. Operation from 230-volt, 2-wire service, available in many countries, will necessitate the use of an additional conversion transformer. Details for this type installation may be obtained by contacting The Hallicrafters International Division, 4401 W. 5th Avenue, Chicago, Illinois, 60624.

Under peak power input conditions, the equipment may draw in excess of 10 amperes from 230-volt service or in excess of 20 amperes from 115-volt service. This power requirement will generally exceed the capabilities of most home 115-volt wall outlets. If the station is to operate from a 115-volt outlet, a separate circuit rated at 30 amperes should be provided.

9-4. PRIMARY POWER CONNECTIONS.

The power supply is shipped from the factory with the line cord wired for 115-volt service outlets. The junction box wiring for the line cord may be exposed for inspection by removing the back cover of the power supply. The cover is held in place with two screws.

Note that the line cord wiring for 115-volt service requires that one side of the line shall be connected to terminals 1, 2, and 5 and the other side of the line shall be connected to terminals 3 and 4. The ground pin of the line cord plug is wired to the ground bolt on the chassis (green lead).

If the equipment is to operate from a 230-volt, 3-wire 60 cycle single phase service outlet, make the following changes in the power supply terminal strip wiring:

A. Disconnect the line cord leads (three leads) and all jumpers connected to the terminal strip and to the chassis ground bolt. Retain the jumper wires for possible re-use.

B. Connect terminal 2 to terminal 3 using the short jumper wire just removed in step A.

C. Connect the green line cord lead to terminal 5. This is the neutral wire of the three wire system.

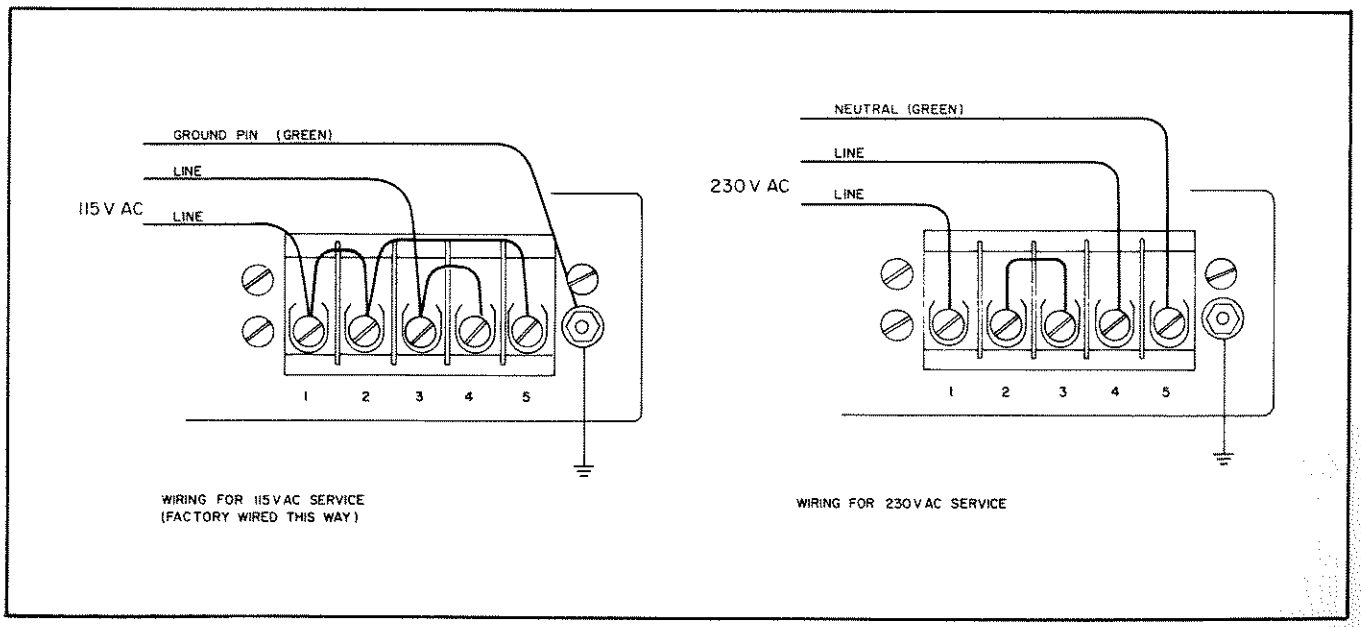

156-007366

Figure 18. Model P-2000 Power Supply, Primary Power Connections.

D. Connect one of the two remaining line cord leads (black or white) to terminal 1 and the other to terminal 4. This completes the terminal strip wiring for 230-volt operation.

E. Disconnect and remove the line cord plug supplied for 115-volt service. A 230-volt service plug has been supplied with the power supply for this purpose. Install and wire the 230-volt service plug connecting the green neutral lead to the neutral pin and the black and white leads to each of the blade contacts. If the 230-volt service outlet does not match the style plug supplied, obtain a matching plug and wire as required. Make sure the green line cord lead is connected to the neutral terminal of the service outlet.

CAUTION

THE VOLTAGES USED IN THE MODEL P-2000 POWER SUPPLY ARE LETHAL. EXERCISE EXTREME CARE IF SERVICE WORK MUST BE CARRIED ON WITH LIVE, EXPOSED CIRCUITS.

9-5. INSTALLATION AND OPERATION.

The Model P-2000 Power Supply is specifically designed for use with the Model SR-2000 Transceiver. Refer to Sections III and V of this manual for specific installation and operating instructions that apply to the power supply unit.

9-6. CHASSIS REMOVAL.

A. Disconnect the power supply from the service outlet and from the Model SR-2000 Transceiver.

B. Remove the two rear cover mounting screws and take off the rear cabinet cover.

C. Turn the power supply over and set it down on the bench bottom side up. When handling the power supply, keep in mind that it weighs around 60 pounds. Remove the four cabinet feet only. Note that three chassis screws still remain to support the chassis.

D. Turn the power supply over and set it right side up on the bench. By sliding the unit to the edge of the bench, remove the remaining three screws one at a time. Make sure the center of gravity of the power supply stays over the work bench while performing this operation.

E. Carefully slide the chassis out through the front opening of the cabinet.

F. Reassemble the unit in the reverse order when re-installing the chassis. Be sure to anchor the chassis securely to the cabinet before turning the unit over to attach the mounting feet.

9-7. METER LAMP REPLACEMENT.

Follow the procedure for chassis removal outlined in paragraph 9-6, and slide the chassis out of the cabinet just far enough to gain access to the meter lamp. Unclip the lamp socket assembly and replace the lamp with a number 1892, 14-volt miniature bayonet base lamp.

PARTS LIST

Schematic Symbol	Description	Hallicrafters Part Number
	Baffle, Speaker	012-000292
	Bracket, Meter Mounting	067-013055
	Cabinet	066-004577
	Cable, 12-Conductor	087-008910
	Cable, Ground	087-009308
	Cable, Power	087-008909
C301,302, 303,304,305	Capacitor, 0.01 μF, 1400V, Ceramic	047-200752
C306 thru C313	Capacitor, 90 μF, 500V, Electrolytic	045-001337
C314	Capacitor, 8 μF, 500V, Electrolytic	045-100491
C315,316, 317	Capacitor, 20 μF, 250V, Electrolytic	045-000903
C318A,B	2 x 30 μF, 350V, Electrolytic	045-000902
L301	Choke, Screen	050-002327
L302	Choke, Filter	056-000595
L303	Choke, Filter	056-000585
P303	Connector, Socket	010-002591
CR301,302	Diode, 5KV, 1 Ampere	019-003797
CR303,304, 305,306,308, 309	Diode, Type 1N3487	027-000314
CR307	Diode, Type 1N3194	019-002769
	Escutcheon, Front Panel	007-000939
	Foot, Rubber (4)	016-201072
F301,302	Fuse, 12 Ampere, 3AB	039-100497
F303	Fuse, 3 Ampere	039-100301
	Fuseholder (F301,302,303)	006-000845
	Grill, Speaker	007-000932
DS301	Lamp, HV Indicator	039-000800
DS302	Lamp, Pilot, No. 1892	039-000797
M302	Meter, Plate Current	082-000685
M301	Meter, Plate Voltage	082-000684
	Panel, Front	068-001683
	Panel, Rear	068-001703
P301	Plug, 117 VAC	010-002973
	Plug, 230 VAC	010-002974
K301	Relay, Primary Power	021-000837
K302	Relay, Hi-Lo Power	021-000841
K303	Relay, Time Delay	021-000836
K304	Relay, Overload	021-000839
R301 thru R308	Resistor, 100K Ohm, 10%, 2 Watt, Carbon	451-652104
R309,310, 311	Resistor, 25K Ohm, 5%, 50 Watt, Wirewound	024-100846
R312	Resistor, 15 Ohm, 5%, 10 Watt, Wirewound	448-031150
R313,314	Resistor, 2.7 Megohm, 10%, 2 Watt, Carbon	451-652275
R315	Resistor, 1500 Ohm, 10%, 2 Watt, Carbon	451-652152
R316	Resistor, 12K Ohm, 5%, 25 Watt, Wirewound	024-001593
R317,318	Resistor, 4 Ohm, 10%, 5 Watt, Wirewound	445-012040
R319	Resistor, 1 Ohm, 10%, 5 Watt, Wirewound	445-012010
R320	Resistor, 1000 Ohm, 10%, 1/2 Watt, Carbon	451-252102
R321	Resistor, 8200 Ohm, 10%, 1/2 Watt, Carbon	451-252822
R322	Resistor, 100 Ohm, 10%, 1/2 Watt, Carbon	451-252101
R323, 325, 326,327	Resistor, 12K Ohm, 10%, 2 Watt, Carbon	451-652123
R324	Resistor, 33K Ohm, 10%, 1 Watt, Carbon	451-352333
R328	Resistor, 47K Ohm, 10%, 1/2 Watt, Carbon	451-252473
	Shield, Pilot Lamp	086-100037
	Socket, Pilot Light	086-000626
	Socket, Tube, 9-Pin	006-000947
	Socket, High Voltage	006-001206
SP301	Speaker	085-000268
S301	Switch, Button (Black)	060-002836-002
S302	Switch, Button (Red)	060-002836-001
S303	Switch, Toggle, Hi-Lo Power	060-100285-003
T1	Transformer, Plate	050-002326
T2	Transformer, Power	052-001007

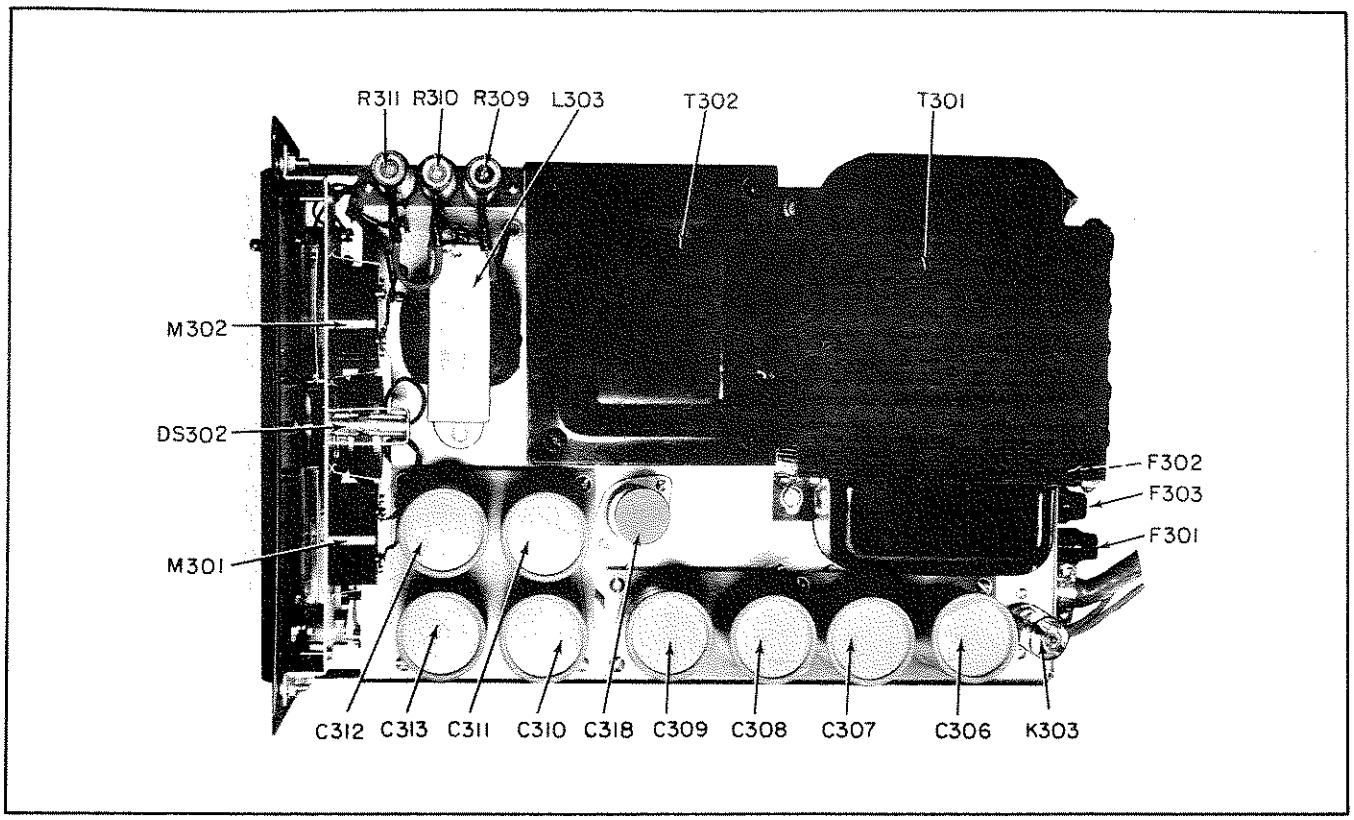

156-007100

Figure 19. Model P-2000 Power Supply Top View, Component Location.

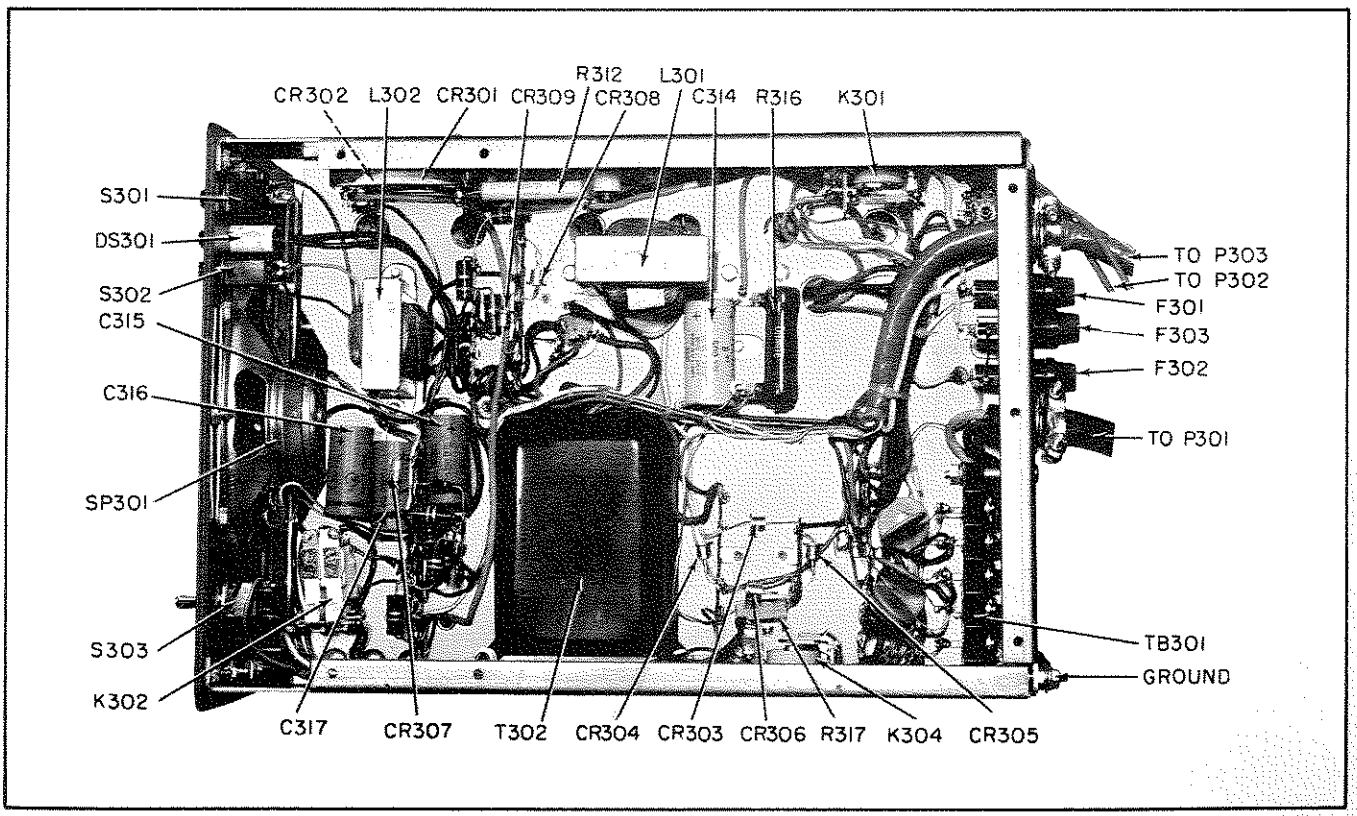

156-007101

Figure 20. Model P-2000 Power Supply Bottom View, Component Location.

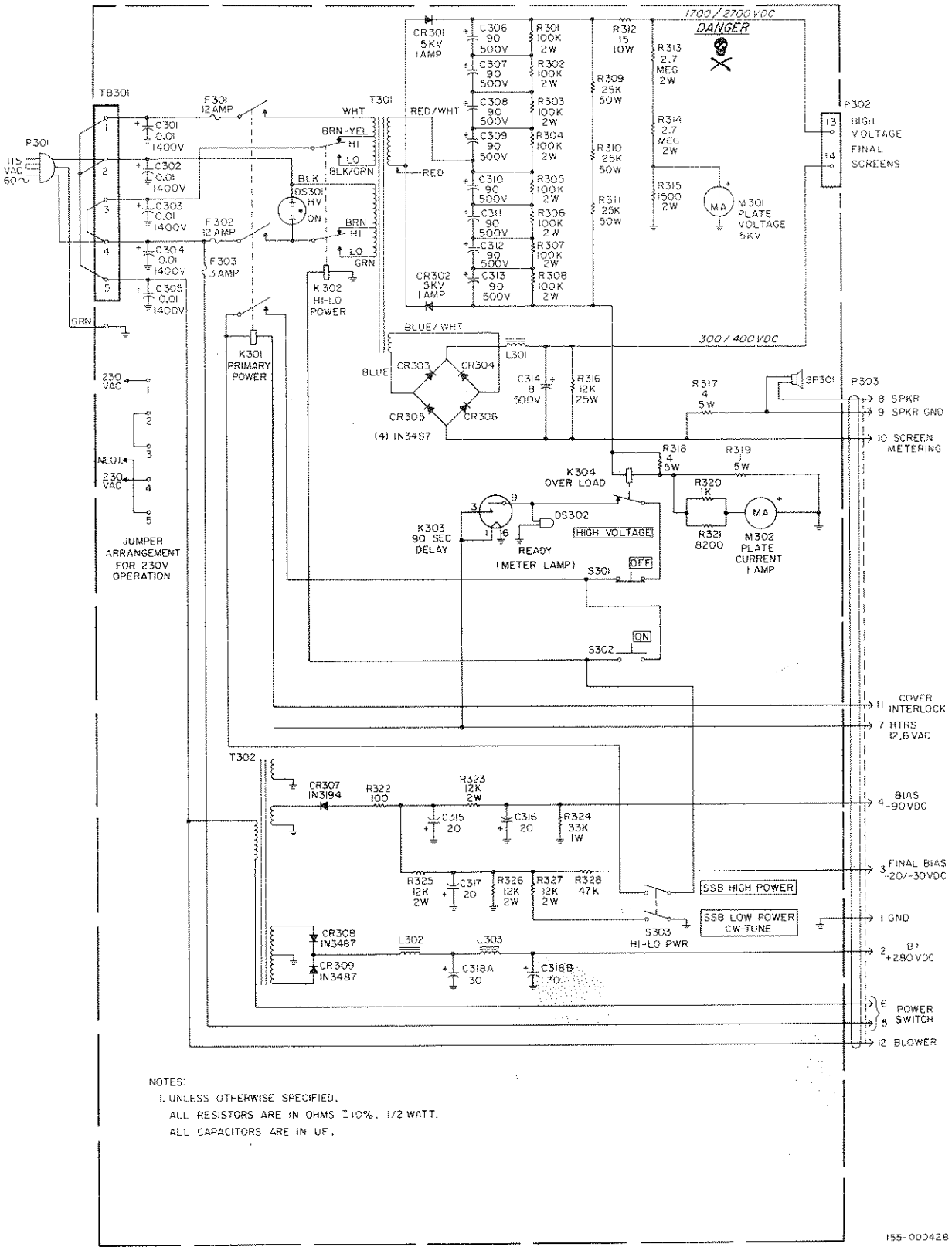

Figure 21. Model P-2000 Power Supply Schematic Diagram.

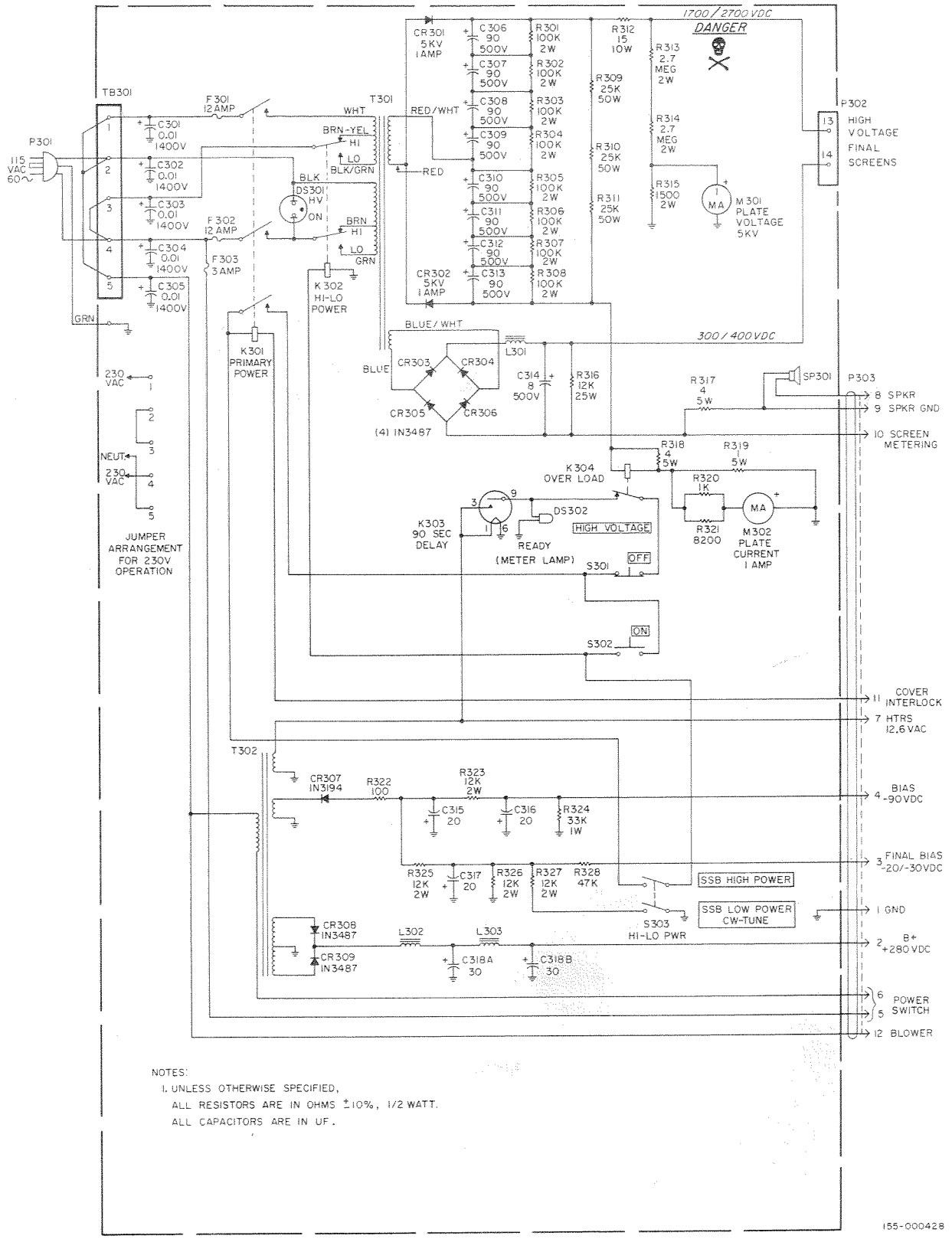

Figure 21. Model P-2000 Power Supply Schematic Diagram.

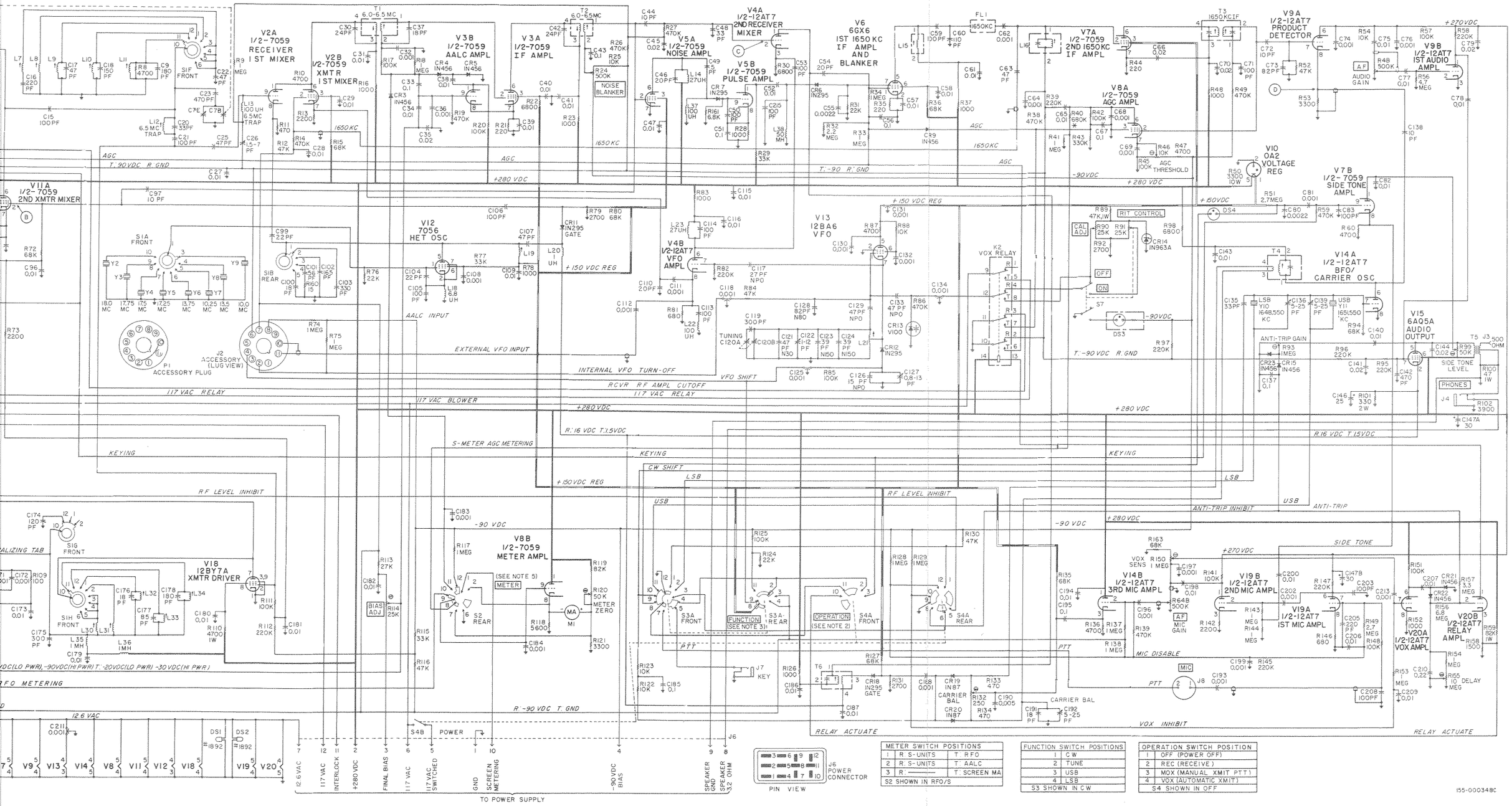

Figure 22. Model SR-2000 Transceiver Schematic Diagram.

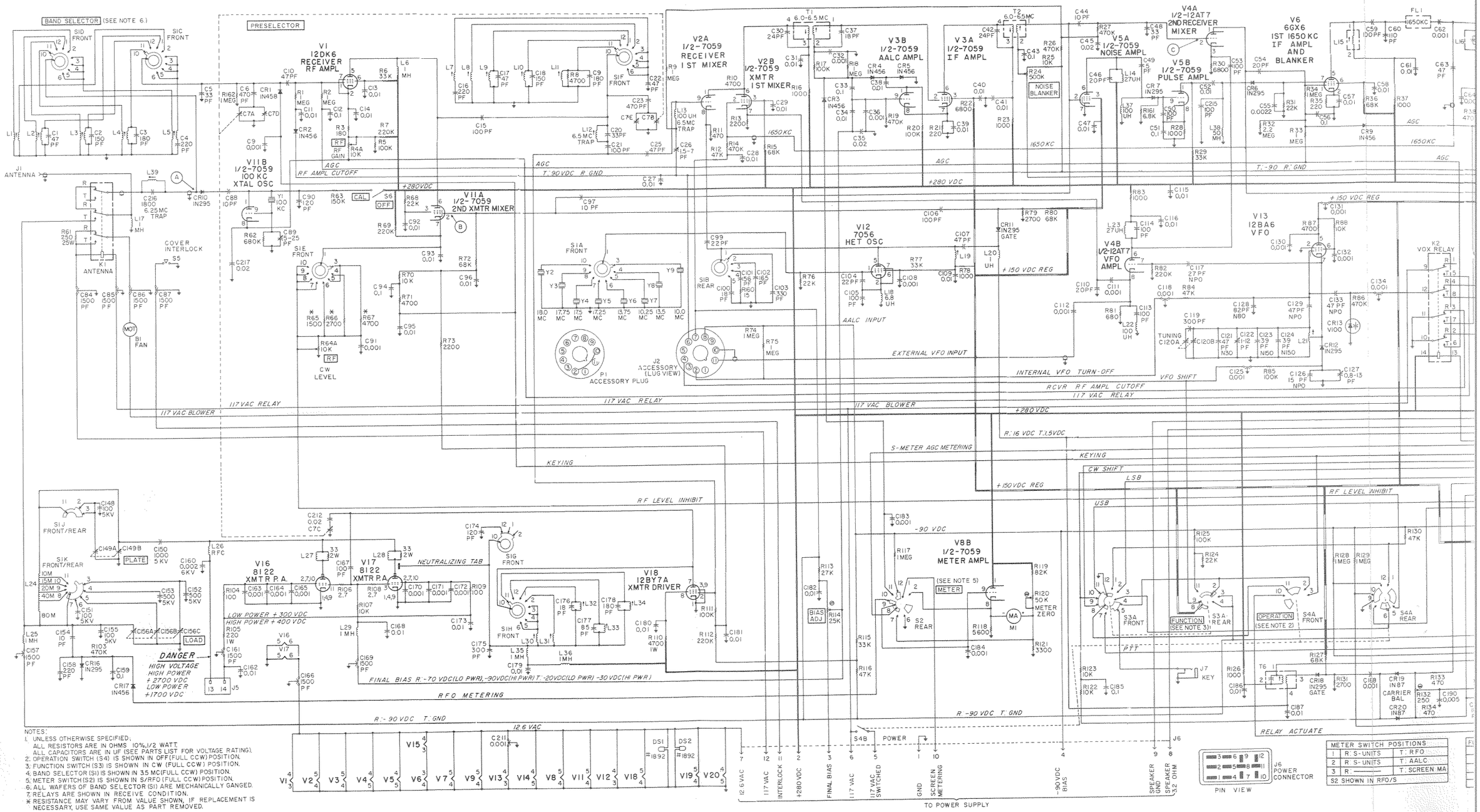

NOTES:
1. UNLESS OTHERWISE SPECIFIED,
   ALL RESISTORS ARE IN OHMS 10%, 1/2 WATT.
   ALL CAPACITORS ARE IN UF (SEE PARTS LIST FOR VOLTAGE RATING).
2. OPERATION SWITCH (S4) IS SHOWN IN OFF (FULL CCW) POSITION.
3. FUNCTION SWITCH (S3) IS SHOWN IN CW (FULL CCW) POSITION.
4. BAND SELECTOR (S1) IS SHOWN IN 3.5 MC (FULL CCW) POSITION.
5. METER SWITCH (S2) IS SHOWN IN S/RFO (FULL CCW) POSITION.
6. ALL WAFERS OF BAND SELECTOR (S1) ARE MECHANICALLY GANGED.
7. RELAYS ARE SHOWN IN RECEIVE CONDITION.
* RESISTANCE MAY VARY FROM VALUE SHOWN, IF REPLACEMENT IS NECESSARY, USE SAME VALUE AS PART REMOVED.

Figure 22. Model SR-2000 Transceiver Schematic Diagram.

MODEL SR-2000 SERVICE REPAIR PARTS LIST

Schematic Symbol	Description	Hallicrafters Part Number
	CAPACITORS	
C1,17,22	47 PF, 5%, 500V, Mica	493-110470-233
C2,18	150 PF, 5%, 500V, Mica	493-110151-234
C3,19,178	180 PF, 5%, 500V, Mica	493-110181-234
C4,16	220 PF, 5%, 500V, Mica	493-110221-234
C5,20	33 PF, 5%, 500V, Mica	493-110330-233
C6,23,142	470 PF, 10%, 500V, Mica	493-110471-134
C7A,B,C, D,E	Variable, PRE-SELECTOR	048-000526
C9,32,36, 62,64, 68,69,74,76, 81,91,108,111,112,130, 132,163,164,165,170, 171, 172,183,184,188, 193,196,197,199,202, 213	0.001 μF, 20%, 500V, Ceramic	047-001671
C10,25,63, 107	47 PF, 10%, 500V, Mica	493-110470-133
C11,13,14, 27,28,29, 31,34,38,39, 40,41,47,52,57,58,61,65,75, 77,78,82,92,93,95,96,109, 115,116,140,143,162,168, 173,179,180,181,182,186, 187,194,200,206,207, 209,198	0.01 μF, 20%, 500V, Ceramic	047-100354
C12,33,43, 51,56,67,159	0.1 μF, +80%, -20%, 100V, Ceramic	047-001428
C15,21,50, 53,59,71,83, 105,106,113, 114,167,203, 208,215	100 PF, 10%, 500V, Mica	493-110101-134
C26	Variable, 1.5 PF - 7 PF	044-100457
C30,42	24 PF, 10%, 500V, Mica	493-110240-131
C35,45,66 70,79, 141,144,145, 212,217	0.02 μF, +80%, -20%, 500V, Ceramic	047-100242
C37,191	18PF, 10%, 500V, Mica	493-110180-131
C44,72,88, 97,138,154	10 PF, ±0.5 PF, 500V, Mica	493-110100-531
C46,54, 110	20 PF, 10%, 500V, Mica	493-110200-131
C48	33 PF, 10%, 500V, Mica	493-110330-133
C49	5 PF, ±0.5 PF, 500V, Mica	493-110050-531
C60	110 PF, 10%, 500V, Mica	493-110111-134
C73	82 PF, 10%, 500V, Mica	493-110820-134
C55,80	0.0022 μF, 10%, 600V, Paper	046-001434-304
C84,85,86, 87,157,161, 166,189	1500 PF, Feed-Thru	047-100602
C89,136, 139,192	Variable, 5 PF-25 PF, Trimmer	044-100473
C90	120 PF, 10%, 500V, Mica	493-110121-134
C94,185, 137,195	0.1 μF, 10%, 200V, Paper	046-001294-004
C99	22 PF, 5%, 500V, Mica	493-110220-231
C100,176	18 PF, 5%, 500V, Mica	493-110180-231
C101	56 PF, 5%, 500V, Mica	493-110560-233
C102	165 PF, 5%, 500V, Mica	493-121650-234
C103	330 PF, 5%, 500V, Mica	493-110331-234
C104	22 PF, 10%, 500V, Mica	493-110220-131
C117	27 PF, 5%, 500V, NPO, Ceramic	491-005270-022
C118,125, 131,134, 211	0.001 μF, GMV, Feed-thru	047-001308
C119	300 PF, 2%, 300V, Mica	493-110301-324
C120A,B	Variable, Tuning	048-000597
C121	47 PF, 5%, 500V, N30, Ceramic	491-025470-031
C122	Variable, 1.0 PF-12PF, Trimmer	044-000643
C216	1800 PF, 10%, 300V, Mica	493-310182-124

Schematic Symbol	Description	Hallicrafters Part Number
	CAPACITORS (CONT).	
C123,124	39 PF, 5%, 500V, N150, Ceramic	491-005390-051
C126	15 PF, 5%, 500V, NPO, Ceramic	491-005150-022
C127	Variable, 0.8 PF-13.0 PF, Piston Trimmer	044-000520
C128	82 PF, 5%, 500V, N80, Ceramic	491-025820-042
C129,133	47 PF, 5%, 500V, NPO, Ceramic	491-025470-022
C135	33 PF, 5%, 100V, Mica	493-910330-213
C146	25μF, 25V, Electrolytic	045-001431
C147A,B	2 x 30 μF, 350V, Electrolytic	045-000902
C148,151, 155	100 PF, 10%, 5KV, Ceramic	047-001924
C149A,B	Variable, PLATE	048-000630
C150	1000 PF, 20%, 5 KV, Ceramic	047-200556
C152,153	500 PF, 20%, 5 KV, Ceramic	047-201084
C156A,B, C	Variable, LOAD	048-000629
C158,205	220 PF, 10%, 500V, Mica	493-110221-134
C160	0.002 μF, 20%, 6 KV Ceramic	047-101085
C174	120 PF, 5%, 500V, Mica	493-110121-234
C175	300 PF, 5%, 500V, Mica	493-110301-234
C177	85 PF, 5%, 500V, Mica	493-110850-234
C190	0.005 μF, 20%, 500V, Ceramic	047-100442
C210	0.22 μF, 10%, 200V, Paper	046-001298-004
	***RESISTORS**	
R1,2,9,18, 33,34,41,74, 75,117,128, 129,137,138, 143,144,153, 154,162	1 Megohm	451-252105
R3	180 Ohm	451-252181
R4A,B and R64A,B	Variable, Dual, 500K and 10K, RF & AF	025-002063
R5,17,20, 42,45,57, 85,111,125, 141,148,151	100K Ohm	451-252104
R6,29,71, 115	33K Ohm	451-252333
R7,39,58, 69,82,95,96, 97,112, 145,147	220K Ohm	451-252224
R13,73,142	2200 Ohm	451-252222
R8,10,47, 60,67,71, 87,136	4700 Ohm	451-252472
R11,133 134	470 Ohm	451-252471
R12,52, 84,116,130	47K Ohm	451-252473
R14,19,26, 27,38,49,59, 86,103,139	470K Ohm	451-252474
R15,36, 72,80,94, 127,135,163	68K Ohm	451-252683
R16,23,28, 37,48,78,83 126,152	1000 Ohm	451-252102
R21,35,44	220 Ohm	451-252221
R22,30,98, 161	6800 Ohm	451-252682
R24	Variable, 500K Ohm, 30%, 1/8 Watt NOISE BLANKER	025-002696
R25,54,70, 88,107,122, 123	10K Ohm	451-252103
R102	3900 Ohm	451-252392
R32	2.2 Megohm	451-252225
R40,62	680K Ohm	451-252684
R43	330K Ohm	451-252334
R46	Variable, 10K Ohm, AGC Threshold	025-002330
R50	3300 Ohm, 10 Watt	445-032332
R51,149	2.7 Megohm	451-252275
R53,121	3300 Ohm	451-252332
R56	4.7 Megohm	451-252475

Schematic Symbol	Description	Hallicrafters Part Number
	***RESISTORS (CONT).**	
R61	250 Ohm, 25 Watt, Wirewound	024-001629
R63	150K Ohm	451-252154
R65,158	1500 Ohm	451-252152
R66,79,92 131	2700 Ohm	451-252272
R31,68,76, 124	22K Ohm	451-252223
R81,146	680 Ohm	451-252681
R89	47K Ohm, 1 Watt	451-352473
R90	Variable, 25K Ohm, CAL ADJ	025-002509
R91	Variable, 25K Ohm, RIT, (includes S7)	025-002510
R93,150	Variable, 1 Megohm, 30%, 2/10 Watt, Anti-Trip Gain and VOX Sens.	025-002067
R99,120	Variable, 50K Ohm, 20%, 2/10 Watt, Sidetone Level and Meter Zero	025-002065
R100	47 Ohm, 1 Watt	451-352470
R101	330 Ohm, 2 Watt	451-652331
R104,109	100 Ohm	451-252101
R105	220 Ohm, 1 Watt	451-352221
R106,108	2.7 Ohm	451-252027
R110	4700 Ohm, 1 Watt	451-352472
R113	27K Ohm	451-252273
R114	Variable, 25K Ohm, 20%, 1/3 Watt, BIAS ADJ	025-002698
R118	5600 Ohm	451-252562
R119,159	82K Ohm, 1 Watt	451-352823
R132	Variable, 250 Ohm, 10%, 3/10 Watt, Carrier Bal.	025-002064
R155	Variable, 10 Megohm, 20%, 2/10 Watt, Delay	025-002066
R156	6.8 Megohm	451-252685
R157	3.3 Megohm	451-252335
R160	15 Ohm	451-252150

*All RESISTORS are carbon type, 10%, 1/2 watt unless otherwise stated.

Schematic Symbol	Description	Hallicrafters Part Number
	COILS AND TRANSFORMERS	
L1	Coil, Antenna, 15 Meter	050-003282
L2	Coil, Antenna, 20 Meter	051-003347
L3	Coil, Antenna, 40 Meter	051-003345
L4	Coil, Antenna, 80 Meter	051-003346
L5	Coil, Antenna, 10 Meter	051-003531
L6,17,20, 25,29,35,36	Choke, RF, 1.0 MH	053-000580
L7,30	Coil, RF, 10 Meter	051-003532
L8,31	Coil, RF, 15 Meter	051-003349
L9,32	Coil, RF, 20 Meter	051-003342
L10,33	Coil, RF, 40 Meter	051-003340
L11,34	Coil, RF, 80 Meter	051-003341
L12	Coil, RF Trap, 6-6.5 MC	050-001068
L13,22,37	Choke, RF, 100 μH	053-000644
L14,23	Choke, RF, 27 μH	053-000666
L15	Variable, Coil, 1650 KC	050-000801
L16	Coil, IF	050-002477
L18	Choke, RF, 6.8 μH	050-001245
L19	Coil, Heterodyne Osc.	050-002370
L21	Coil, VFO	050-002416
L24	Coil, Tank	050-002328
L26	Choke, RF	053-200426
L27,28	Choke, Parasitic	050-002220
T1,2	Transformer, IF Bandpass	050-001045
T3	Transformer, IF 1650 KC	050-000890
T4,6	Transformer, IF Bal. Mod.	050-000881
T5	Transformer, Audio Output	055-000508
L38	Choke, RF, 50 MH	050-001044-009
L39	Coil, 6.5 MC Trap	050-003467
	ELECTRON TUBES, DIODES, AND CRYSTALS	
V1	Tube, Type 12DK6	090-001660
V2,3,5,7,8, 11	Tube, Type 7059	090-001561
V4,9,14, 19,20	Tube, Type 12AT7	090-900034
V6	Tube, Type 6GX6	090-001639
V10	Tube, Type 0A2	090-900001
V12	Tube, Type 7056	090-001642
V13	Tube, Type 12BA6	090-900039
V15	Tube, Type 6AQ5A	090-901331
V16,17	Tube, Type 8122	090-001640
V18	Tube, Type 12BY7A	090-901192
CR1	Diode, Type 1N458	019-001930

Schematic Symbol	Description	Hallicrafters Part Number
	ELECTRON TUBES, DIODES, AND CRYSTALS	
CR2,3,4, 5,9,15,17, 21,22,23	Diode, Type 1N456	019-002964
CR6,7, 10,11,12, 16,18	Diode, Type 1N295	019-301980
CR13	Varicap, Type V100	048-000464
CR14	Diode, 12V Zener, Type 1N963A	019-003655
CR19,20	Diode, Type 1N8	019-002941
Y1	Crystal, 100.000 KC	019-002712
Y2	Crystal, 18.00 MC	019-003769-008
Y3	Crystal, 17.75 MC	019-003769-007
Y4	Crystal, 17.5 MC	019-003769-006
Y5	Crystal, 17.25 MC	019-003769-005
Y6	Crystal, 13.75 MC	019-003769-004
Y7	Crystal, 10.25 MC	019-003769-003
Y8	Crystal, 13.5 MC	019-003769-002
Y9	Crystal, 10 MC	019-003769-001
Y11	Crystal, 1651.550 KC	019-003681-002
Y10	Crystal, 1648.550 KC	019-003681-001
	CONNECTORS	
J1	Jack, Antenna Connector	010-100056
J2	Socket, 11-Pin, Accessory	006-200707
J3	Jack, Phono, 500 Ohm	036-100041
J4,7	Jack, Key and PHONES	036-200210
J5	Connector, High Voltage	035-000095
J6	Connector, Power, 12-Pin Jones Plug	010-002586
J8	Connector, MIC, W/hardware	010-101569
P1	Plug, 11-Pin, Accessory Plug	010-002932
	SWITCHES	
S1A,E	Wafer, RF and Heterodyne Osc	062-000266
S1B	Wafer, Osc. Plate	062-000263
S1C,D,F, H	Wafer, RF and Driver	062-000265
S1G	Wafer, PA Neut.	062-000264
S1J,K	Wafer, PA	060-002842
S2	Rotary, METER	060-002818
S3	Rotary, FUNCTION	060-002796
S4	Rotary, OPERATION (includes S4B, Power)	060-002795
S5	Pushbutton, Cover Interlock	060-002836
S6	Rotary, CAL	060-002794
	MISCELLANEOUS	
B1	Blower	020-000413
	Bracket, Blower	067-013082
	Bracket, Choke	067-013015
	Bracket, Coil Mounting (6)	067-203456
	Bracket, Esutcheon Mounting (2)	067-013109
	Bracket, Function Switch	067-012720
	Bracket, Gang Mounting	067-013016
	Bracket, Meter Mounting	067-012721
	Bracket, Meter Switch and Bias Adj. Pot.	067-013014
	Bracket, Pilot Light	067-013315
	Bracket, Pot. Mounting	067-012712
	Bracket, Preselector Shaft	067-013223
	Bracket, Spring Adjust	067-012607
	Bracket, Switch	067-010585
	Bracket, Switch Mounting	067-013083
	Cabinet Assembly	150-008949
	Cabinet Bottom Rivet Assembly	150-009577
	Cabinet Top Assembly	150-009578
	Cabinet, Weld Assembly	066-004580
	Coupling, Insulator (Green)	029-001061
	Coupling, Insulator (Yellow)	029-200564
	Cover, Air Box	066-004581
	Cover, Cabinet Bottom	066-004579

Schematic Symbol	Description	Hallicrafters Part Number
	MISCELLANEOUS (CONT).	
	Cover, Cabinet Top	066-004578
	Cover, Gang VFO	066-004434
	Cover, RF Shield	066-004584
	Escutechon	007-000903
FL1	Filter, Crystal	049-000324
	Foot, Rubber (4)	016-201072
	Front Panel Assembly	150-008948
	Gear, Dial	026-001173
	Gear, Idler	026-001170
	Gear, Idler Spur	026-001002
	Gear, Pinion	026-001171
	Gear, Pinion Drive	026-001166
	Gear, Spur	026-001089
	Gear, Spur, Dial Scale	026-001174
	Gear, Spur (Fixed)	026-001088
	Gear, Spur, Pinion Shaft	026-001172
	Handle, Knob	030-000793
	Housing, Air Box	066-004582
	Indicator, Light	086-000687
	Indicator, PRE-SELECTOR	082-000576-001
	Knob, CAL-ADJ and CAL-OFF	015-001755-002
	Knob, LOAD Tuning	015-001925
	Knob, Main Tuning	015-001617
	Knob, NOISE BLANKER and METER AALC	015-001775
	Knob; OPERATION, FUNCTION, and BAND SELECTOR	015-001760
	Knob, PLATE Tuning	015-001909
	Knob, PRE-SELECTOR	015-001752-001
	Knob; RF Gain, CW-Tune Level, and RIT CONTROL ON-OFF	015-001740-001
	Knob; RIT CONTROL, Mic Gain, and Audio Gain	015-001773
DS1,2	Lamp, Pilot, No. 1892	039-000797
DS3,4	Lamp, Neon, NE-2	039-100012
	Medallion	007-000850
M1	Meter (with hardware)	082-000683
	Plate, Gear	063-006830
	Plate, Front VFO	063-006821
	Plate, Idler Gear	063-006827
	Plate, Left Chassis	063-007021
	Plate, Pivot	063-006828
	Plate, Right Chassis	063-007022
	Plate, Top Gang Cover	063-006869
	Pulley (2)	028-200144
	Rear Panel Assembly	150-008955
K1	Relay, Antenna	021-000838
K2	Relay, VOX	021-000732
	Roller (2)	028-000550
	Shaft, BAND SELECTOR	074-003097
	Shaft, Cam	074-002997
	Shaft, Dial Gear	074-002996
	Shaft, PRE-SELECTOR	074-002756-003
	Shaft, PRE-SELECTOR (Outer)	074-002791-002
	Shaft, Tuning (Loading)	074-003083
	Shaft, Outer	074-003084
	Shield, Tube (V7,19)	069-201190
	Shield, Tube (V18)	069-001590
	Socket, 4-crystal	150-003281
	Socket, Dual crystal	006-000984
	Socket, Pilot Light Assembly	086-000741
	Socket, Relay	006-001184
	Socket, Single Crystal	006-100320
	Socket, Tube, 7-Pin (V1,6)	006-200947
	Socket, Tube, 9-Pin (V2, 3, 5, 11)	006-200947
	Socket, Tube, 9-Pin (V4,8,9, 14, 20)	006-001112
	Socket, Tube, 7-Pin (V6, 12, 13, 15)	006-001094
	Socket, Tube, 9-Pin (V7, 18, 19)	006-200395
	Socket, Tube, 11-Pin (V16,17)	006-001212
	Spring, Anti-Backlash	075-000841
	Spring, Cam	075-001007
	Spring, Dial Cord	075-100012
	Spring, Hold-down	075-001418
	Spring, Idler Follower	075-200610
	Spring, Pivot Plate	075-001008
	Stud, Switch	074-003096
	Window, Glass, KC	022-000747
	Window, Left Glass	022-000748
	Window, Right Glass	022-000749

WARRANTY

"The Hallicrafter's Company warrants each new radio product manufactured by it to be free from defective material and workmanship and agrees to remedy any such defect or to furnish a new part in exchange for any part of any unit of its manufacture which under normal installation, use and service discloses such defect, provided the unit is delivered by the owner to our authorized radio dealer, wholesaler, from whom purchased, or, authorized service center, intact, for examination, with all transportation charges prepaid within ninety days from the date of sale to original purchaser and provided that such examination discloses in our judgment that it is thus defective.

This warranty does not extend to any of our radio products which have been subjected to misuse, neglect, accident, incorrect wiring not our own, improper installation, or to use in violation of instructions furnished by us, nor extended to units which have been repaired or altered outside of our factory or authorized service center, nor to cases where the serial number thereof has been removed, defaced or changed, nor to accessories used therewith not of our own manufacture.

Any part of a unit approved for remedy or exchange hereunder will be remedied or exchanged by the authorized radio dealer or wholesaler without charge to the owner.

This warranty is in lieu of all other warranties expressed or implied and no representative or person is authorized to assume for us any other liability in connection with the sale of our radio products."

the hallicrafters co.

092-014555