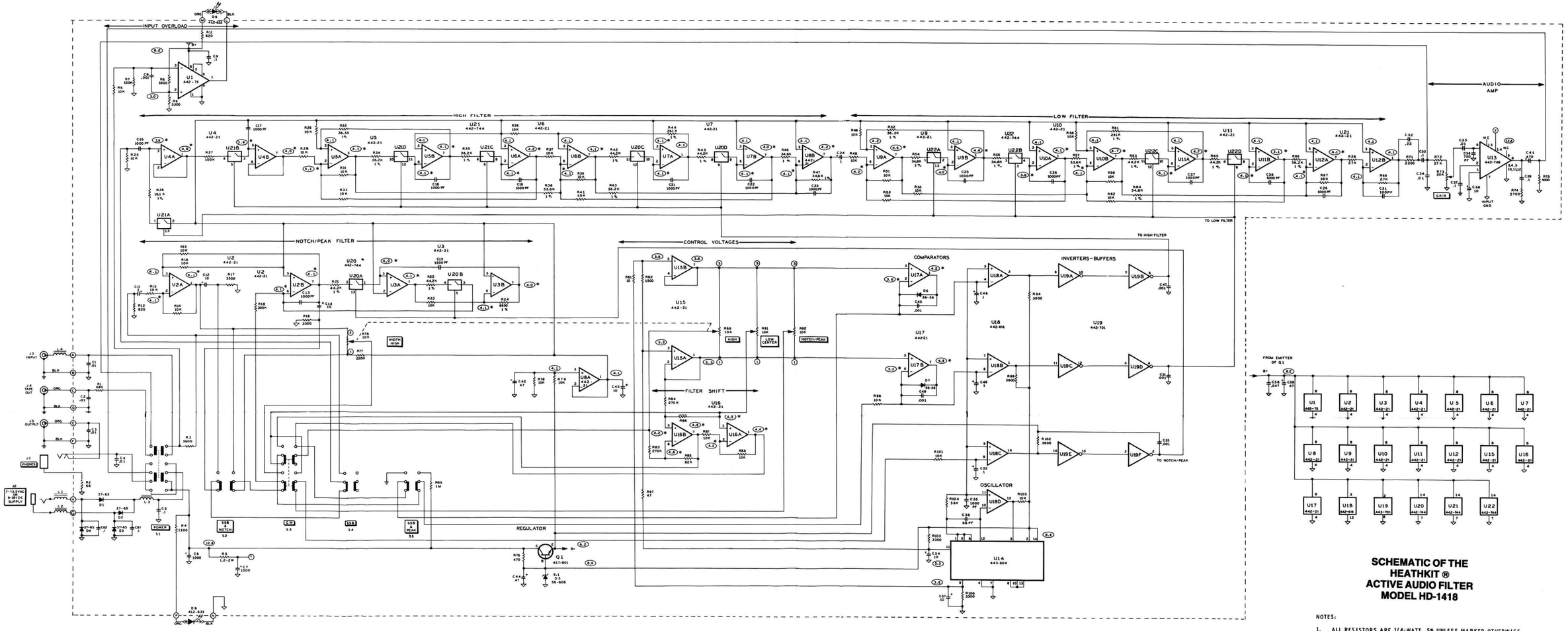

SCHEMATIC OF THE HEATHKIT® ACTIVE AUDIO FILTER MODEL HD-1418

NOTES:

1. ALL RESISTORS ARE 1/4-WATT, 5% UNLESS MARKED OTHERWISE. RESISTORS VALUES ARE IN OHMS (K=1,000, M=1,000,000).
2. ALL CAPACITOR VALUES ARE IN µF (MICROFARADS) UNLESS MARKED IN PF (PICOFARADS).
3. ○ INDICATES A WIRE CONNECTION ON THE CIRCUIT BOARD.
4. ⏚ INDICATES A CHASSIS GROUND.
5. ⏚ INDICATES A CIRCUIT BOARD GROUND.
6. ⬭ INDICATES A DC VOLTAGE (±20%) MEASURED WITH A HIGH IMPEDANCE VOLTMETER FROM THE POINT INDICATED TO CHASSIS GROUND. ALL MEASUREMENTS WERE TAKEN WHILE THE FILTER WAS BEING POWERED BY A 14-VOLT POWER CUBE.
7. ALL PUSHBUTTON SWITCHES EXCEPT POWER ARE SHOWN IN THE OUT POSITION.
8. ALL COILS ARE HAND-WOUND. (VALUES ARE NOT GIVEN).

* THESE VOLTAGES MAY VARY WITH DIFFERENT SWITCH AND CONTROL SETTINGS.

Copyright © 1983
Heath Company
All Rights Reserved
Printed in the United States of America

Part of 595-2980