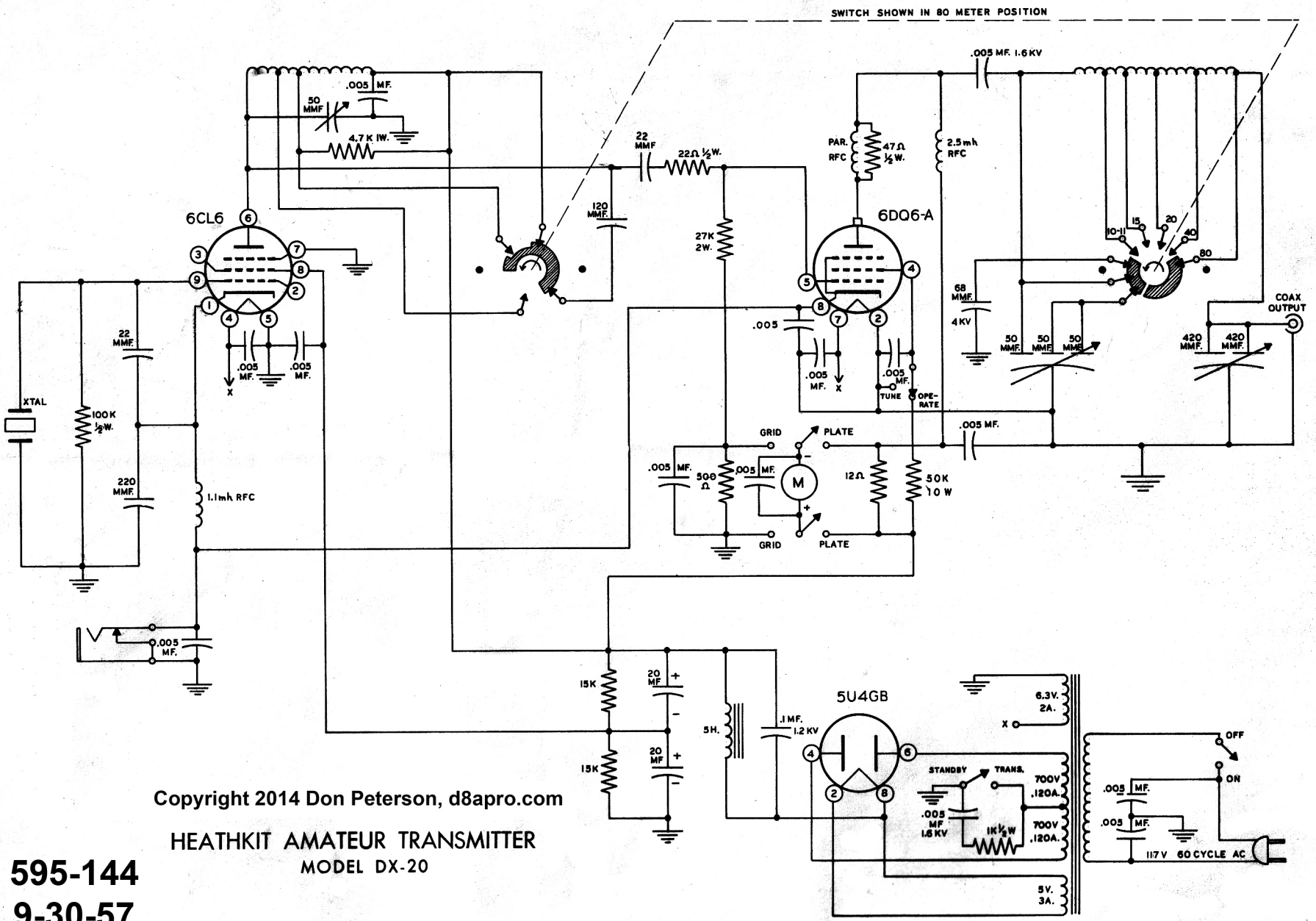

Copyright 2014 Don Peterson, d8apro.com

HEATHKIT AMATEUR TRANSMITTER
MODEL DX-20

595-144
9-30-57