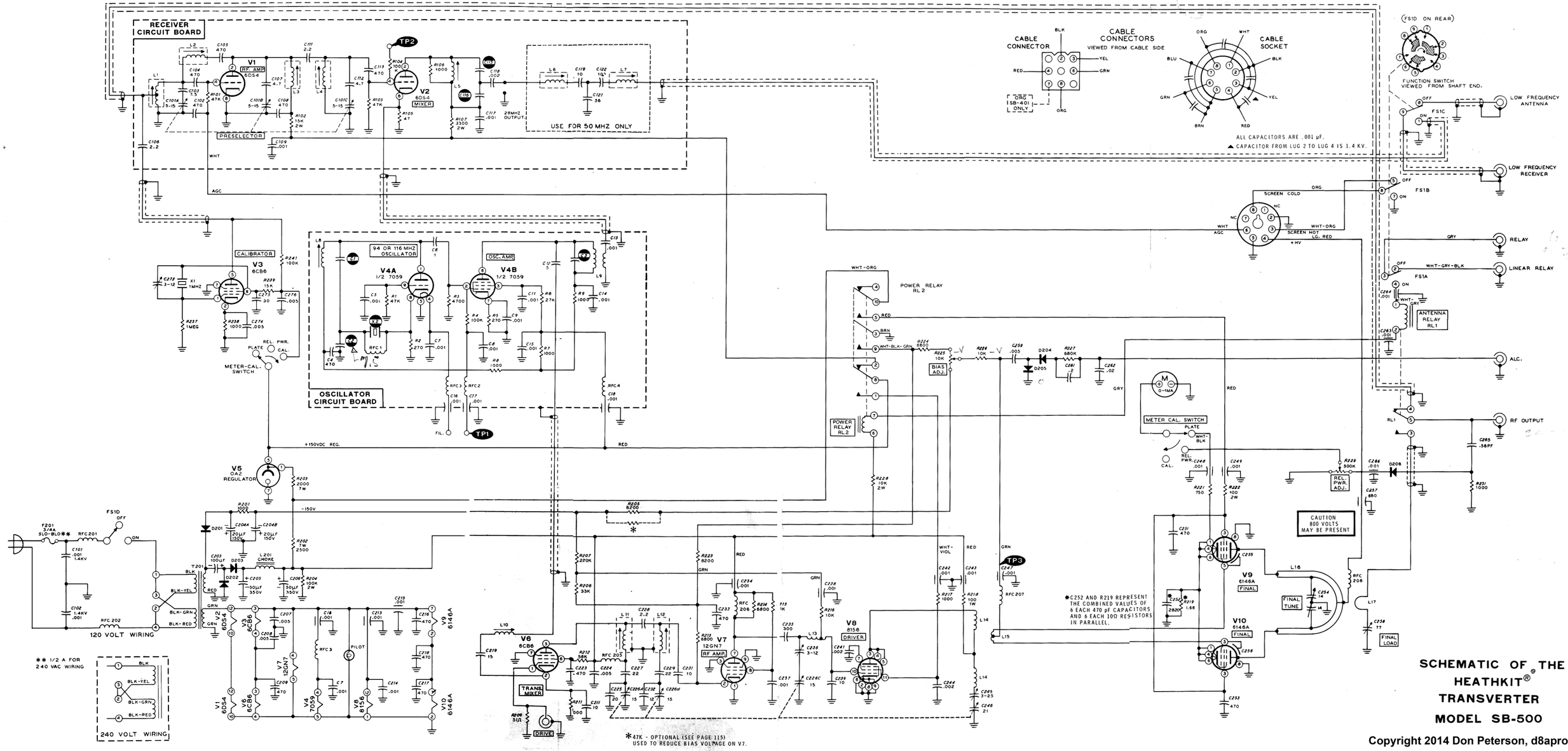

SCHEMATIC OF THE HEATHKIT® TRANSVERTER MODEL SB-500

Copyright 2014 Don Peterson, d8apro.com

595-993 3-14-69