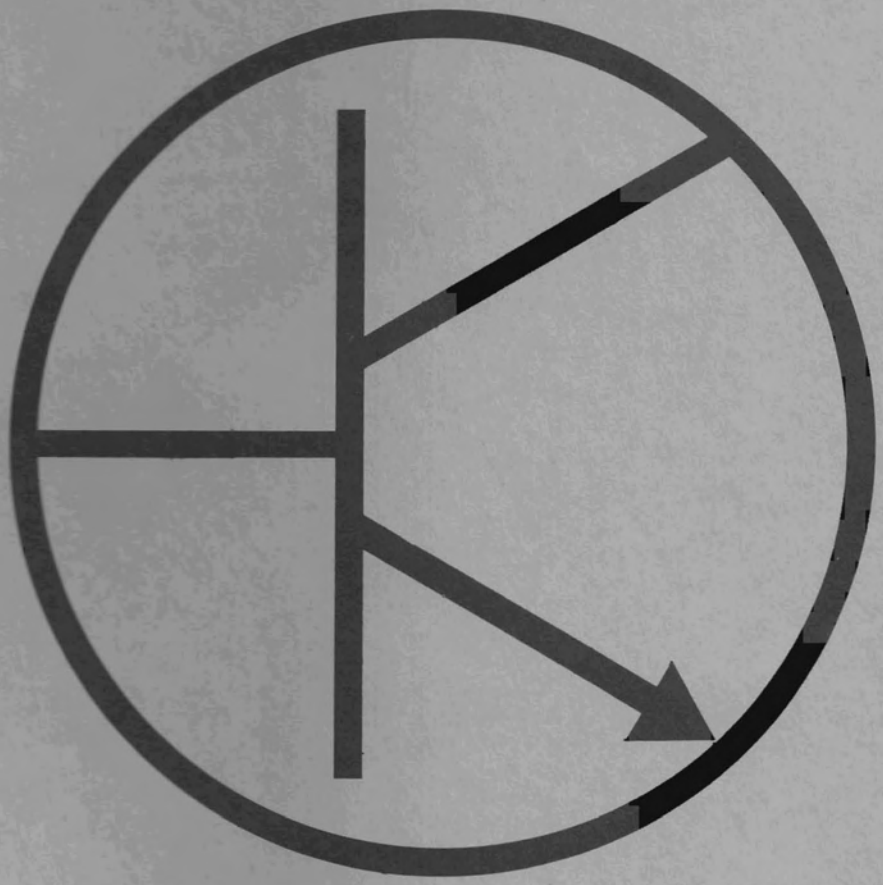

HAMMARLUND

In order to receive the full unconditional 90-day warranty against defective material and workmanship in this receiver, the warranty card must be filled out and mailed within two weeks of purchase.

Please refer to serial number of warranty in correspondence.

HQ-215

COMMUNICATIONS RECEIVER

INSTRUCTION AND SERVICE INFORMATION

MANUAL NO.
9001-06-00009
Issue 1
1-68

HAMMARLUND
MANUFACTURING COMPANY
Established 1910
73-88 HAMMARLUND DRIVE, MARS HILL, NORTH CAROLINA 28754
704-689-5411 / TWX 510-935-3553 / CABLE: SUPERPRO - NEW YORK
EXPORT DIVISION — 13 E. 40th STREET, NEW YORK, N. Y 10016
A GIANNINI SCIENTIFIC COMPANY

INDUSTRIAL, AMATEUR, COMMERCIAL AND MILITARY COMMUNICATIONS EQUIPMENT / VARIABLE AIR CAPACITORS

TABLE OF CONTENTS

SECTION	TITLE	PAGE
	INTRODUCTION	ii
1	Installation	1
1.1	Unpacking	1
1.2	Receiver Connections	1
1.3	Interconnections for use with transmitter	4
2	Operation	5
2.1	General	5
2.2	Operation of Controls	5
2.3	Calibration	7
2.4	SSB Tuning	7
2.5	CW Tuning	8
2.6	AM Tuning	8
2.7	RTTY Tuning	9
2.8	Use of "S" Meter	9
2.9	Determining Operating Frequency	9
2.10	Additional Frequency Coverage	9
3	Theory of Operation	11
3.1	General	11
3.2	RF Amplifier and High Frequency Oscillator	11
3.3	First Mixer and Bandpass IF	11
3.4	Second Mixer and Variable Frequency Oscillator	12
3.5	455 kHz IF, Detector Circuits and Noise Limiter	12
3.6	Audio Circuits	12
3.7	BFO and CW Oscillator Circuits	13
3.8	AGC and "S" Meter Circuitry	13
3.9	Rejection Filter	13
3.10	Mute Circuitry	14
3.11	Power Supply	14
4	Alignment and Service	15
4.1	General	15
4.2	Trouble Analysis	15
4.3	Voltage Measurements	15
4.4	Resistance Measurements	16
4.5	IF Alignment	16
4.6	Oscillator Adjustment	20
4.7	RF Alignment	23
4.8	Module Removal	25
5	Specifications	28
5.1	Frequency Coverage	28
5.2	Receiver Specifications	28
5.3	Semiconductor Complement	29
5.4	HFO Crystal Specifications	30
6	Parts List	31
7	X-Ray Views and Diagrams	35

LIST OF ILLUSTRATIONS

FIGURE	TITLE	PAGE
1-1	Rear Connections	2
1-2	Typical Antenna Installations	2
1-3	Attaching Cable to phono type connectors	3
1-4	Installation of Ground	3
1-5	Installation of Lighting Arrestors	3
1-6	Transmitter Interconnections	4
2-1	Front View of HQ-215	7
2-2	Crystal Location	10
4-1	Top View of HQ-215	19
4-2	Bottom View of HQ-215	19
4-3	RF Module with Bandswitch	22
4-4	Re-Stringing Dial Drive	26
7-1	X-Ray View, Slot Filter Module	35
7-2	X-Ray View, BFO Module	35
7-3	X-Ray View, VFO Module	36
7-4	X-Ray View, Power Supply Module	36
7-5	X-Ray View, RF Module	37
7-6	X-Ray View, Main Module	38
7-7	HQ-215 Block Diagram	39
7-8	HQ-215 Schematic Diagram	41

LIST OF TABLES

TABLE	TITLE	PAGE
2-1	Receiver Frequency Range and Crystal Frequency Range	8
4-1	Voltage Measurement	16
5-1	Transistor Complement	29
5-2	Diode Complement	29

INTRODUCTION

The Hammarlund HQ-215 Communications Receiver is a unique radio whose fully transistorized circuitry offers a new high in sensitivity, selectivity, drift free operation and reliability. From power plug to speaker, this receiver has been designed with you in mind.

The HQ-215 uses 26 transistors, 13 diodes and 2 Zener regulators. Dual conversion is employed on all bands providing excellent image and spurious response rejection. The receiver offers complete amateur band coverage from 80-10 meters. In addition to the dual conversion the incorporation of mechanical filters enhance the selectivity of this receiver. An aid in the suppression of unwanted heterodynes and interfering carriers is the REJECTION TUNING which provides better than 40 db of attenuation.

A PRESELECTOR tuned RF stage assures maximum sensitivity and a high signal to noise ratio for outstanding reception of weak signals. The built-in 100 kHz crystal calibrator provides signals at every 100 kHz on all bands for calibrating the dial for a readout accuracy of better than ±100 Hertz of the operating frequency on all bands.

The HQ-215 is equipped with a crystal controlled beat frequency oscillator for the reception of LSB and USB signals. To complete this complement is a very stable independent variable beat frequency oscillator for use in the reception of CW signals.

The AGC has been tailored to produce a minimum of audio output change with large variations of input signal. Inclusion of an "S" meter enables the operator to achieve "on the nose" tuning and a relative indication of received signal strength.

The HQ-215 Receiver has a self contained power supply capable of operation from either a 110V 50-60 Hertz or 220V 50-60 Hertz source. Incorporated in the design is the unique feature of operation from a 12V DC source. There is no internal wiring change necessary to operate from any of these three sources. The only requirement being that the plug on the power cable be wired for the particular source to be used.

The mechanical construction is of a ruggedized I-beam style that achieves maximum strength and allows easy removal of top, bottom, and side panels for ease of maintenance and periodic alignment. The mechanical construction as well as the modularized design provide the ultimate in electrical and mechanical stability.

All the necessary outputs and connections have been provided to aid in setting up an amateur station. A 3.2 ohm output is provided for speaker operation and a 500 ohm output for anti-trip operation of VOX circuits. The muting connection will operate with most transmitters. In addition, the outputs of the HFO and VFO can be used in transceive operation with a matching transmitter.

The concept of the HQ-215 receiver was designed with the amateur in mind. You will have many hours of pleasure in operating this truly fine communications instrument.

SECTION 1 INSTALLATION

1.1 UNPACKING

Immediately after receipt of the receiver it should be removed from the shipping carton and visually inspected to insure that it has not been damaged in shipment. If it is determined that the receiver has been damaged in transit the shipping carton and packing material should be saved and the transportation company notified immediately.

As part of the initial inspection all of the front panel controls should be checked to insure their proper mechanical operation. It is advisable to generally, "look the receiver over" and verify that nothing has been shaken loose and that everything appears to be normal.

The following items are supplied with each receiver:

1. Instruction manual, Hammarlund part number 9001-06-00009, quantity 1.
2. AC power cable assembly (120V), Hammarlund part number 9001-03-00248, quantity 1.
3. Phono-type connectors, Hammarlund part number 2107-01-00001, quantity 8.

1.2 RECEIVER CONNECTIONS

If the HQ-215 Receiver is to be used for receiving only and not as part of a system with interconnections to an associated transmitter there are only a few required connections. These connections are easily accessible at the rear of the receiver and their design permits permanent connections to be made in a neat manner. Figure 1-1 illustrates the connections points at the rear of the receiver.

1.2.1 ANTENNA CONNECTION

The HQ-215 Receiver has been designed to operate from a 50-70 ohm unbalanced antenna input. To obtain the best results from the receiver the antenna that most nearly suits your needs should be selected. The illustrations shown in Figure 1-2 are typical antenna installations. All that is required is to install a PL-259 connector on the feed-line and connect to antenna input J701.

1.2.2 SPEAKER CONNECTIONS

Instructions for installing the phono connector on the speaker cable are illustrated in Figure 1-3. After wiring the connector, insert in J704 (3.2 ohm audio).

1.2.3 GROUND CONNECTIONS and/or LIGHTNING ARRESTOR INSTALLATION

A good external earth ground connection to the chassis is a must to eliminate a potential shock hazard. It is possible that a voltage may exist between the chassis and ground as a result of the two power line by-pass capacitors that are connected across the power line with the center tap grounded. A method of connecting a ground is illustrated in Figure 1-4.

As added protection it is also desirable to install a lightning arrestor. This would provide protection for the receiver as well as the operator. Figure 1-5 illustrates two methods of installing lightning arrestors.

1.2.4 POWER CONNECTIONS

Before inserting the power cable into the receiver it should first be determined that the power source is of the proper voltage and frequency.

The power cable normally supplied with the HQ-215 has been wired at the factory for use on 110 VAC, 50-60 Hertz. This cable may be re-wired for either 220 VAC, 50-60 Hertz or 12 VDC. There is no rewiring necessary as far as the basic receiver is concerned.

To convert the power cable for use on 220

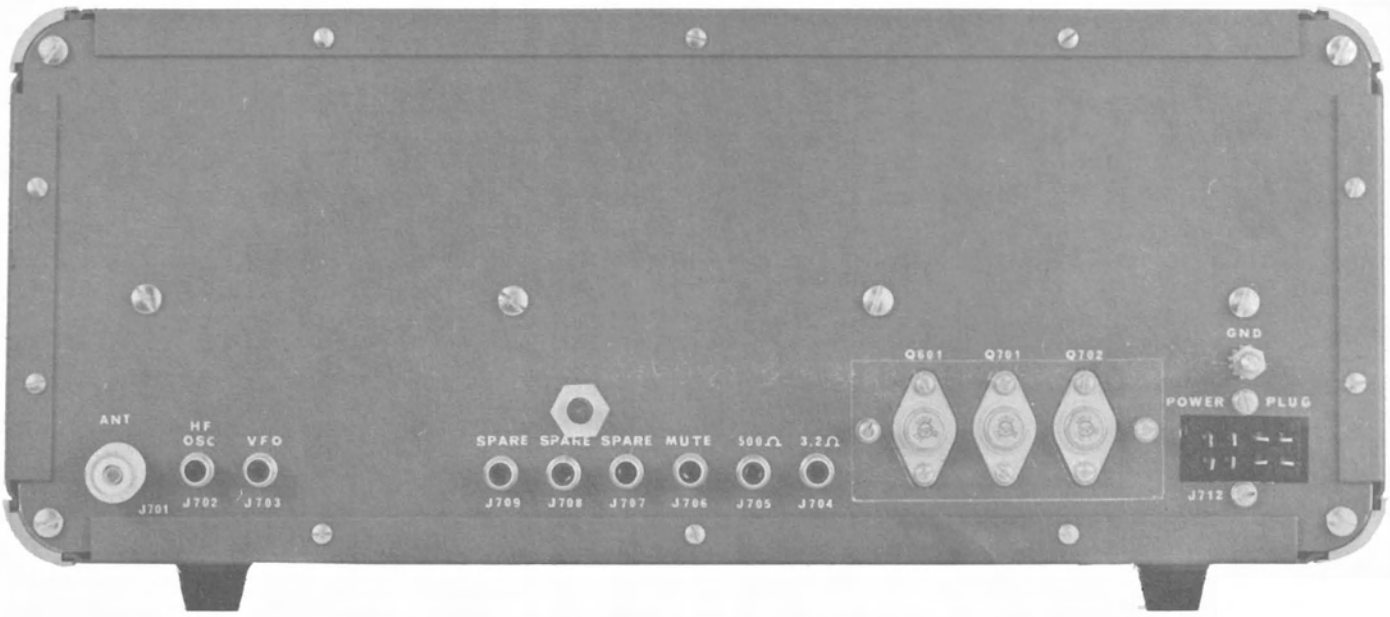

FIGURE I-1 REAR CONNECTIONS

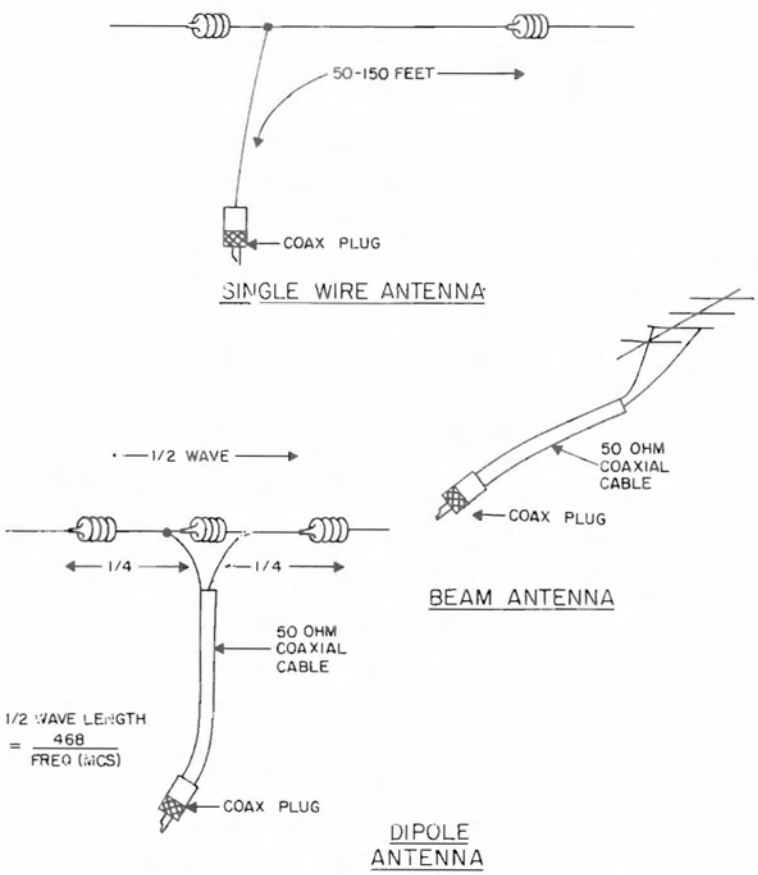

FIGURE I-2 TYPICAL ANTENNA INSTALLATION

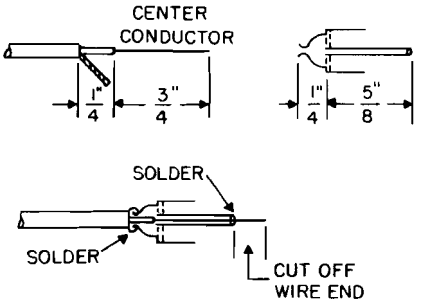

1. CUT AND SPREAD
2. STRIP INSULATION.
3. INSERT CABLE INTO PLUG, CENTER CONDUCTOR THRU PIN. SOLDER CENTER CONDUCTOR, CUT OFF EXCESS.
4. SOLDER SHIELD AROUND OUTER NECK OF BODY.

CAUTION: DO NOT USE TOO MUCH HEAT, CENTER CONDUCTOR INSULATION MELTS EASILY!

ATTACHING CABLE TO PHONO TYPE CONNECTOR

FIGURE 1-3

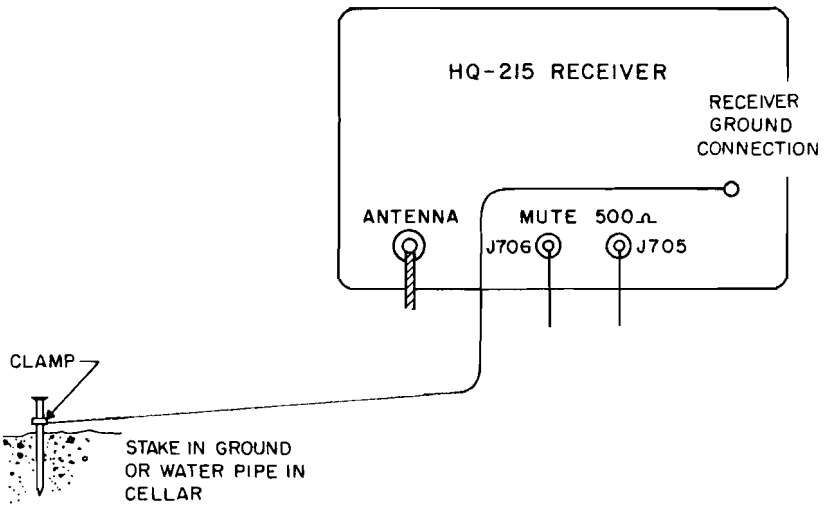

INSTALLATION OF EARTH GROUND

FIGURE 1-4

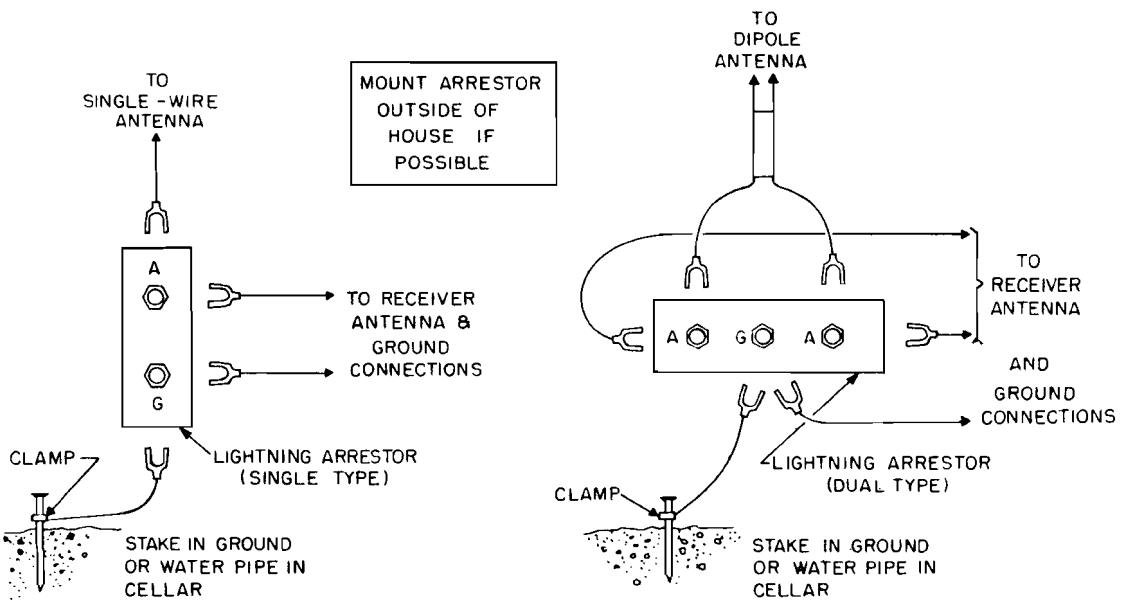

TYPICAL LIGHTNING ARRESTOR INSTALLATIONS

FIGURE 1-5

VAC remove the jumper between pins 5 and 6, the jumper between pins 1 and 2 and the jumper between pins 7 and 4 on the power cable plug. Install a jumper between pins 4 and 5. Refer to the schematic diagram where this is illustrated.

For use on 12 VDC remove all wiring from plug and wire the wire coming from the positive side of the 12 VDC source to pin 2 of the power cable plug and the wire coming from the negative side of the VDC source to pin 3. It is important to observe the polarity when using the receiver on 12 VDC. In the event that the polarity is reversed the thermal circuit breaker (TH601) will open, preventing the receiver from operating. This circuit has been designed to make the pilot lamps flash when this condition exists.

1.2.5 MUTE CONNECTIONS

The design of the HQ-215 Receiver is such that ground must be supplied to the mute jack (J706) for the receiver to operate in all positions of the function switch. Without this ground the receiver will be muted in all positions of the function switch.

1.3 INTERCONNECTIONS FOR USE WITH TRANSMITTER

Figure 1-6 illustrates the interconnections required for using HQ-215 Receiver with a transmitter.

The following paragraphs describe the required interconnections to use the receiver in this manner. The receiver and transmitter require a common ground and the antenna input to the receiver may be controlled by an internal antenna changeover relay in the transmitter or an external antenna changeover relay. Consult your transmitter manual for interconnection instructions.

1.3.1 ANTI-VOX CONNECTIONS

The output of J705 (500 ohm audio output) should be connected to the anti-vox connections of the transmitter. Connecting the receiver and transmitter in this manner allows the anti-trip circuitry of the transmitter to prevent the transmitters' vox-circuitry from being actuated by incoming audio signals.

1.3.2 MUTE CONNECTIONS

In order to mute the receiver internally the function switch should be placed in STBY. All other positions of the function switch allow the transmitter to control the muting of the receiver when interconnected properly. For the transmitter to control these functions it will require a set of normally closed contacts which ground the receiver muting circuit. This permits the receiver to operate normally. When the transmitter is keyed on the air these normally closed transmitter contacts must open to mute the receiver.

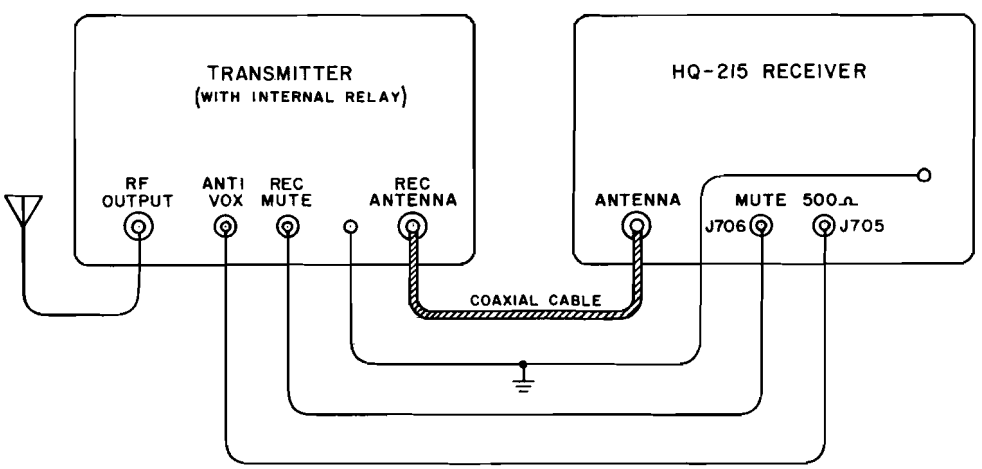

FIGURE 1-6 INTERCONNECTIONS

SECTION 2 OPERATION

2.1 GENERAL

With the receiver installed as suggested in Section 1 you are now ready to receive transmissions. This section is intended as an aid to operate the receiver in a manner that will produce the best audible signal possible. A brief description of each of the front panel controls is followed by detailed instructions for tuning AM, CW, SSB, and RTTY signals.

2.2 OPERATION OF CONTROLS

The index numbers referred to in this section are taken from Figure 2-1 unless otherwise noted.

2.2.1 AGC FAST-SLOW CONTROL (Index #1)

The control functions to select the decay time of the AGC circuit. In the SLOW position the decay time is approximately 2 seconds; in the FAST position the decay time is decreased to 500 milli seconds. A fast decay time will be found quite advantageous in the event fading is experienced. The type of signal and atmospheric conditions will also be a factor in selecting the desired AGC decay time.

2.2.2 VARIABLE BFO CONTROL (Index #2)

The range of the variable beat frequency oscillator is 452-458 kHz (± 3kHz of 455 kHz). The versatility of the variable BFO is realized in being able to obtain a beat note that is pleasing to the ear when tuning CW signals. When using this control the signal should first be tuned to "Zero Beat" with the BFO control set at "O", then adjust the BFO control for the desired beat note.

2.2.3. DIAL ZERO ADJUST (Index #3)

This control is used to set the hairline to the exact center frequency of the calibrate signal. By first setting the hairline where the signal from the 100 kHz calibrator is at zero beat the frequency of a received signal is easily determined by the position of the dial scale under the hairline. The range of this control is a minimum of ±4 dial divisions of its center position.

2.2.4 LAMP DIMMER CONTROL (Index #4)

The lamp dimmer control will vary the brilliance of the dial and meter lamps allowing the operator to adjust the illumination of the dial and the meter to suit the particular individual or station requirements. With this control completely counterclockwise the lamps are completely extinquished. As the control is advanced clockwise the brilliance of the lamps will increase.

2.2.5 PRESELECTOR (Index #5)

The Preselector is a three section air variable capacitor that tunes the input to the RF amplifier, output from the RF amplifier, and the input to the 1st mixer simultaneously. This control can be set approximately to the desired frequency by using the markings on the front panel. Markings for all of the Amateur bands are provided as well as a logging scale for use on other bands. After setting to the correct marking and tuning in the desired signal with the frequency tuning knob, this control must be "peaked" in order for the receiver to provide the optimum in sensitivity.

2.2.6 "S" METER (Index #6)

The "S" Meter will show a relative indication of received signal strength. The circuit will function in all of the receive modes. The "S" Meter is calibrated to +60 db over S-9. Each "S" unit from S-1 to S-9 is equal to approximately 6 db.

2.2.7 BANDSWITCH (Index #7)

The Bandswitch is a 24 position switch that selects the particular 200 kHz segment in which the receiver will operate. The frequency markings around the Bandswitch indicate the low frequency end of the band. With the Bandswitch set to position 3.4, the reading on the dial that corresponds to 3.4 MHz is "O" when the hairline (Index #3) is properly adjusted.

Then 100 on the scale would be 3.5 MHz and 200 on the scale would correspond to 3.6 MHz.

2.2.8 REJECTION TUNING (Index #8)

The rejection tuning control will vary the position of a 40db notch or slot from outside of the passband of the IF thru the passband and out the other side. This 40 db notch can be moved into the passband by tuning from the "OFF" position toward "O" on the panel. For instance at the "O" setting the movable 40db notch will appear in the center of the IF passband. This notch should be used as a "hole" for unwanted carriers and heterodynes to "fall-into". When not in use the control must always be returned to the "OFF" position.

2.2.9 FILTER SWITCH (Index #9)

The filter switch has 3 positions (A,B, & C). In position B the 2.1 kHz mechanical filter is switched into the 455 kHz IF circuit. In position A & C, a 6 kHz and a 0.5 kHz filter, respectively, will be switched into the 455 kHz IF circuit. The HQ-215 is shipped from the factory with the 2.1 kHz filter installed in the "B" filter sockets. The filters for positions A & C are considered accessories and are not normally supplied with the receiver. These mechanical filters determine the passband of the 455 kHz IF.

2.2.10 FUNCTION SWITCH (Index #10)

The Function Switch of the receiver has four positions "STBY-REC-NL-CAL". In all positions the receiver will be muted if a ground connection has not been supplied the mute jack (J706). The "STBY" position is used to mute the receiver internally. If it is being remotely muted (see par 1.3.2) it requires a ground be supplied to J706 to un-mute the receiver. The "NL" position is the Noise Limiter; this position has no effect unless the mode switch (Index #14) is in the AM position. When switched to the "CAL" position the 100 kHz calibrator is connected to the RF Amplifier and 100 kHz signals will be present for calibration purposes on all bands. In this position the antenna input circuit is disconnected from the RF stage allowing the calibrate signal to be heard with less interference from received signals. The receiver will not function properly if the "CAL" switch is left on during operation. After calibrating, return the switch to the other positions normally used in your station set up.

2.2.11 FREQUENCY TUNING CONTROL (Index #11)

This control knob varies the frequency of the VFO tuning it across the 200 kHz segment selected by the bandswitch (Index #7). The control also turns the dial drum which is synchronized with the VFO. The frequency scale on the drum indicates the number of kHz added to the bandswitch frequency indication for the exact operating frequency.

2.2.12 RF GAIN (Index #12)

The RF Gain Control manually controls the gain of the receiver. When turned fully clockwise the gain of the receiver is at its' maximum. Rotated in a counterclockwise direction the bias voltage is decreased causing the receiver gain to decrease.

2.2.13 AF GAIN (Index #13)

The AF Gain Control governs the audio output of the receiver. To increase audio output the control should be rotated clockwise. This control will vary the audio at all 3 audio outputs of the receiver simultaneously.

2.2.14 MODE SWITCH (Index #14)

The Mode Switch has four positions AM,CW, LSB, and USB. The LSB and USB positions provide stable SSB reception. The CW position with the variable BFO (Index #1) is used for copying code at the desired beat note or setting RTTY tones, and the AM position is used when copying amplitude modulated phone transmissions.

2.2.15 PHONE JACK (Index #15)

The Phone Jack (J711) provides a low level audio output ahead of the final audio stage. The Phone Jack has an output impedance of 1,000 ohms and headphones of at least 500 ohms impedance or

higher should be used with this output. When using the Phone Jack the final audio amplifier is disabled.

2.3 CALIBRATION

In order for the receiver to be used properly it is important that the dial calibration be checked and set for each band of the receiver. The controls should be set as follows for calibration:

1. AGC - FAST
2. BFO- "O"
3. Preselector - to marking for desired band
4. Bandswitch - to desired band
5. Rejection - "OFF"
6. Filter - "B" (2.1 kHz)
7. Function - "CAL"
8. Tuning - Rotate until dial scale "O" appears under hairline
9. RF - maximum clockwise
10. AF - to suit operator
11. Mode - LSB or USB

With the controls set as described above a marker signal should be heard from the speaker. Rotate the frequency tuning control until the tone reaches zero beat. When the tone is at zero beat, turn the DIAL ZERO SET until the hairline is directly over "O" on the dial scale. The dial zero need not be moved after this setting for this particular band. The dial is now calibrated for this band. This same procedure must be followed for dial accuracy when switching to other bands.

2.4 SINGLE SIDEBAND TUNING

It must be noted that for the dial to be accurate in determining the frequency the calibration must be checked per the instructions in Section 2.3. The controls will remain as set in Section 2.3 with these exceptions:

1. Mode switch to "USB" or "LSB" as desired or required.
2. Function Switch to "REC"
3. AGC - "Slow"

The signal should be tuned in using the frequency tuning control. The preselector

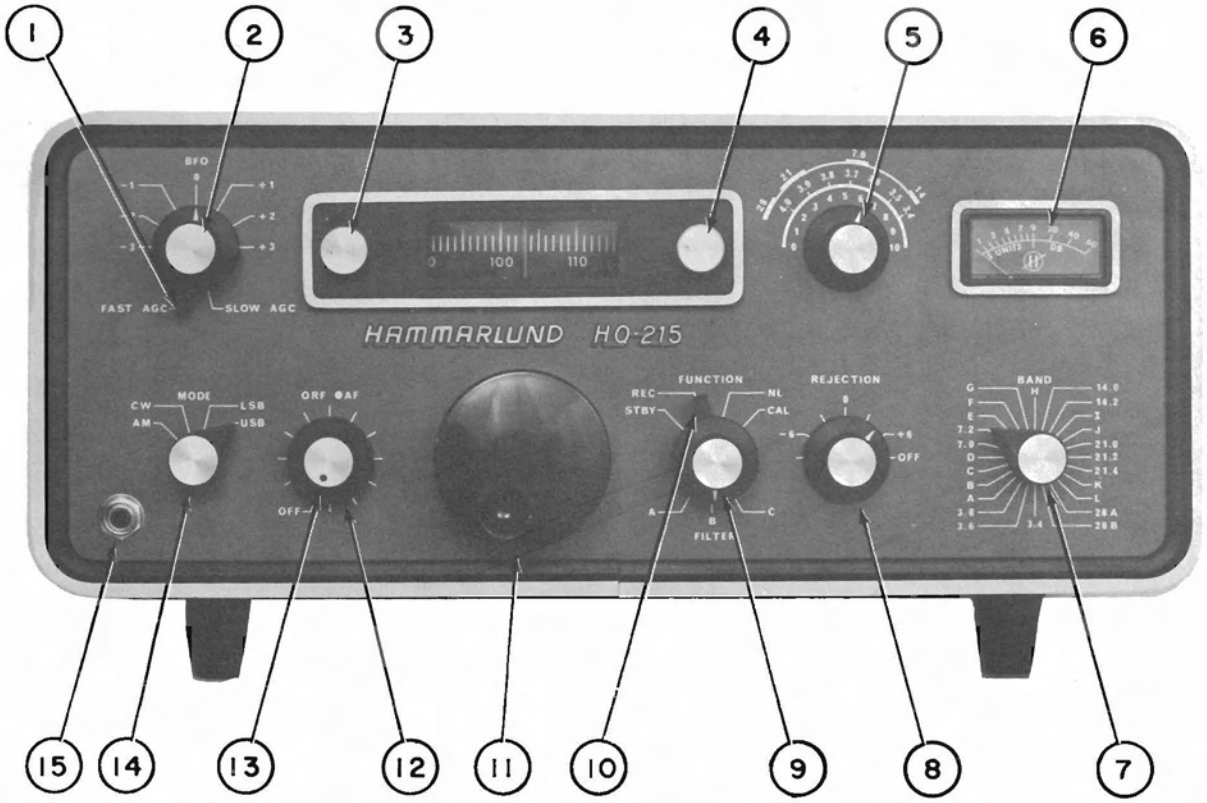

FIGURE 2-1 FRONT VIEW OF HQ-215

should be peaked to provide maximum gain of received signal. A SSB signal may be identified by the lack of a carrier or beat note when tuning across the signal. A SSB signal NOT properly tuned may sound distorted. Intelligibility can only be obtained by proper choice of upper (USB) or lower (LSB) sideband. The accepted or most popular transmission of single sideband signals insofar as the sideband used will be as follows:

BAND	FREQUENCY	SIDEBAND
75 meters	3.8-4.0 MHz	Lower
40 meters	7.2-7.3 MHz	Lower
20 meters	14.2-14.35 MHz	Upper
15 meters	21.25-21.45MHz	Upper
10 meters	28.5-29.7 MHz	Upper

It is not unusual for the other sideband to be used on the above mentioned bands.

2.5 CW TUNING

When tuning CW signals the calibration of the band in use should be checked and set per the instructions in Section 2.3. The controls should be set the same as for calibration with these exceptions:

1. Function - "REC"
2. Mode - "CW"
3. Filter - if desired place this switch to position "C" if the optional 0.5 kHz mechanical filter is used, if not leave switch in Position B (2.1 kHz).

In the tuning of a CW signal the signal should be centered in the filter passband (Zero beat as heard in the speaker) and the desired tone or beat-note produced by turning the BFO control either plus or minus from "O" to obtain the note most pleasing to the ear of the operator. The approximate frequency can be read by either adding or subtracting the indicated number at the BFO control to or from the dial reading.

2.6 AM TUNING

The calibration should be checked and set prior to any frequency readout (refer to Section 2.3). For reception and tuning of AM signals the controls will be the same as when calibrating with these exceptions:

TABLE 2-1 RECEIVE FREQUENCY RANGE AND CRYSTAL FREQUENCY RANGE

BANDSWITCH POSITION	FRONT PANEL MARKINGS	CRYSTAL DESIGNATION	RECEIVER FREQ. RANGE	CRYSTAL FREQ. RANGE
1	3.4	Y101	3.4-4.0 MHz	6.555 MHz thru 7.155 MHz Fundamental Mode
2	3.6	Y102		
3	3.8	Y103		
4	A	Y104	4.0-5.8 MHz	7.155 MHz thru 8.955 MHz Fundamental Mode
5	B	Y105		
6	C	Y106		
7	D	Y107	5.8-10.4 MHz	8.955 MHz thru 13.555 MHz Fundamental Mode
8	7.0	Y108		
9	7.2	Y109		
10	E	Y110		
11	F	Y111		
12	G	Y112	10.4-17.4 MHz	13.555 MHz thru 14.80 MHz Fundamental Mode 14.80 MHz thru 20.555 MHz 3rd. Overtone Mode
13	H	Y113		
14	14.0	Y114		
15	14.2	Y115		
16	I	Y116		
17	J	Y117	17.4-25.4 MHz	20.555 MHz thru 28.555 MHz 3rd. Overtone Mode
18	21.0	Y118		
19	21.2	Y119		
20	21.4	Y120		
21	K	Y121		
22	L	Y122	25.4-30.2 MHz	28.555 MHz thru 33.155 MHz 3rd. Overtone Mode
23	28A	Y123		
24	28B	Y124		

1. Function - "REC"
2. Mode - "AM"
3. Filter - If the optional 6 kHz mechanical filters are used place this switch in position "C", if not place in position "B" (2.1 kHz).

Using the Frequency Tuning control, locate the desired signal and peak the signal on the "S" meter using the tuning and the Preselector tuning to obtain a maximum "S" meter reading. This method will yield the most readable signal.

The following method may be used as an alternate when copying AM without the 6 kHz filter. Set mode switch to either USB or LSB position and use tuning procedure for a single sideband signal. Once the desired signal is tuned in, switching to the opposite sideband may yield a more readable signal. This method of reception is useful under conditions of severe interference or extreme fading.

2.7 RTTY TUNING

This type of operation requires the use of an external RTTY convertor and printer. For the receiver to be used in this mode the controls should be set the same as for CW operation as outlined in Section 2.5. The mechanical filter used on RTTY should be the 2.1 kHz filter at position "B" of the filter switch. The pointer on the BFO control should be set between -2 and -3 as indicated by the panel markings. The signal should be peaked on the "S" meter using the Tuning and Preselector controls. A fine adjustment of the BFO control will produce the 2125 Hertz and 2975 Hertz mark and space signals at the audio output. If it is desirable to reverse these signals (mark and space) the BFO tuning should be set between +2 & +3 on the front panel markings.

2.8 USE OF "S" METER

The "S" meter is intended primarily as an indication of relative signal strength rather than absolute signal strength. This meter has been calibrated at the factory to produce a nominal meter reading of S-9 with a signal of 50 uv applied to the antenna input. In addition the AGC threshold has also been factory adjusted with 1.5 uv applied to the antenna input. Due to tolerances in components and the variance of operation in different bands the threshold of the AGC will vary slightly causing a slight change in "S" meter reading from band to band. Typical meter readings; therefore, can represent from 4 db to 6 db per S unit.

2.9 DETERMINING OPERATING FREQUENCY

The HQ-215 has been designed to provide highly accurate frequency read out when properly calibrated and used. In order for the indicated frequency to be accurate the calibration procedure outlined in Section 2.3 must be adhered to. The dial scale has been marked to allow ease of readout by having a mark at every 1 kHz on the dial with longer marks every 10 kHz.

As an example of determining the operating frequency: assume the bandswitch set at 7.0; "0" on the dial scale now corresponds to 7.0 MHz. Now assume the dial is set at 110 on the dial scale; the frequency would be 7.0 MHz + 110 kHz = 7.110 MHz. With the bandswitch at 7.0 and the dial to 16, the frequency would then be 7.016 MHz. It is easily seen that for any band the setting of the bandswitch plus the reading of the dial equals the operating frequency.

2.10 ADDITIONAL FREQUENCY COVERAGE

For coverage other than the amateur bands and for additional coverage on 10 meters, extra crystal sockets are provided on the crystal mounting board. The range of the crystal oscillator (HFO) is divided into 6 segments to cover the receiving range of the receiver which is 3.4-30 MHz.

The individual range of each of these segments and their related crystal sockets is listed in Table 2-1. In order to cover a particular frequency Table 2-1 should be used to determine which crystal socket to use and which position of the

bandswitch will be used. As an example assume that the desired frequency is 15.0 MHz (WWV). Looking at Table 2.1 it is seen that sockets G, H and I may be used to cover this frequency or one of the crystals covering the 20 meter amateur band could be removed and the new crystal substituted. The position used on the crystal board determines the setting of the bandswitch. The 200 kHz dial readout can be shifted anywhere in the frequency range of the receiver by proper crystal selection. For example, if you wish to cover 14.150 MHz to 14.350 MHz as one band segment, select the proper crystal frequency referring to Section 5. This crystal can be added to the receiver in positions G, H or I. For information on purchasing crystals refer to Section 5 where detailed information concerning the crystal specifications is provided. A very basic example of providing additional coverage on the 10 meter amateur band follows:

First assume the desired band to be covered is 28.7-28.9 MHz. Inspection of Table 2-1 reveals that 28B would be a logical place to install the crystal. From Section 5 it is found that the required crystal frequency is equal to the lowest signal frequency plus 3.155 MHz; therefore the crystal for covering 28.7-28.9 MHz would be 28.7 MHz plus 3.155 MHz yielding a frequency of 31.855 MHz. Installing this crystal in the Y124 position will yield a coverage of 28.7-28.9 MHz (0-200 on the dial) when the bandswitch is in position 28B.

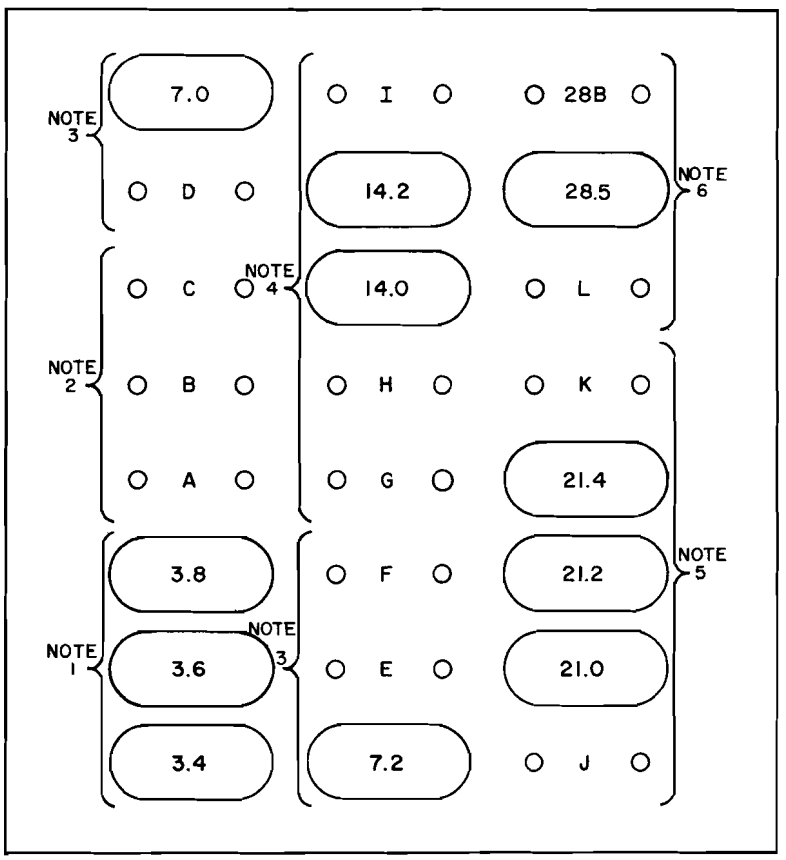

NOTE 1: RECEIVE FREQUENCY RANGE 3.4–4.0 MHz.

NOTE 2: RECEIVE FREQUENCY RANGE 4.0–5.8 MHz.

NOTE 3: RECEIVE FREQUENCY RANGE 5.8–10.4 MHz.

NOTE 4: RECEIVE FREQUENCY RANGE 10.4–17.4 MHz.

NOTE 5: RECEIVE FREQUENCY RANGE 17.4–25.4 MHz.

NOTE 6: RECEIVE FREQUENCY RANGE 25.4–30.2 MHz.

NOTE 7: CRYSTALS SHOWN ARE NORMALLY SUPPLIED.

FIGURE 2-2 CRYSTAL LOCATION

SECTION 3 THEORY OF OPERATION

3.1 GENERAL

This section will aid in understanding the operation of the various circuits in this receiver as well as aid in servicing and diagnosing troubles. The HQ-215 is a dual conversion receiver using a crystal controlled oscillator to provide the first mixing. The first and second mixers are coupled by a bandpass IF circuit 200 kHz wide. The second conversion occurs with the mixing of the 1st IF and the VFO. The low or 2nd IF is amplified and then detected by three different detectors. The first detector provides the necessary AGC voltages the second detector is used for AM reception and the third detector is used for CW and SSB reception. The detected signal is then amplified and applied to the audio output.

The complete circuit of the HQ-215 is shown in the schematic diagram at the rear of the manual. A block diagram is also provided to aid in understanding this receiver. While reading the text it is suggested that both diagrams be followed. The block diagram will reveal the overall scheme whereas the scnematic diagram will provide the detailed circuitry.

3.2 RF AMPLIFIER AND HIGH FREQUENCY OSCILLATOR

The RF signal received at the antenna is applied to the base of Q101 (RF Amplifier) thru the antenna input connector J701. The PRESELECTOR control is a 3 section air variable capacitor that tunes the base and collector of the RF amplifer as well as the base of the first mixer (Q102). The required tuning range of these circuits is obtained by switching an appropriate value of inductance or capacitance in parallel with the PRESELECTOR tuning capacitor and its' associated coils (L101, L103, & L105). The complete range of 3.4-30 MHz is covered by 3 tuning ranges of the PRESELECTOR and by 6 ranges of the crystal controlled high frequency oscillator (Q103). The output of the high frequency oscillator (HFO) is coupled to the emitter of the 1st mixer as well as the base of an emitter follower (Q104), which is coupled to J702 on the rear panel of the receiver. The emitter follower allows the output of the HFO to be used without any loading effect being placed on the HFO.

The RF GAIN control (R710) varies the AGC voltage fed to the base of the RF Amplifier. At its' maximum clockwise setting this control furnishes a +2.2 volt forward bias to the base of Q101. As the setting is changed in a counterclock-wise direction, the bias decreases causing a reduction in gain of the RF amplifier stage. The same condition exists when the strength of the incoming signal increases. The output of the RF Amplifier is coupled by L103, L105 and tuned by the PRESELECTOR tuning capacitor to the base of Q102, the first mixer.

The output of the HFO is always 3.155 MHz higher than the lower edge of the selected band. On frequencies below 14.9 MHz the oscillator collector circuit is tuned to the fundamental crystal frequency; at frequencies above 14.9 MHz the collector circuit is tuned to the third overtone of the crystal.

3.3 FIRST MIXER AND BANDPASS IF

The output of the RF Amplifier is applied to the base of the first mixer Q102. At the same time the output of the HFO coupled thru L107 is applied to the emitter of the first mixer. The two signals are mixed and their products are selected in the collector circuit of Q102. The circuit in the collector of Q102 is tuned as a bandpass circuit passing all frequencies between 2.955 MHz and 3.155 MHz. This is the frequency range of the 200 kHz bandpass IF. The transformers T201 and T202 and their associated components comprise the bandpass IF. The output of this IF is applied to the base of Q201, the second mixer.

3.4 SECOND MIXER AND VARIABLE FREQUENCY OSCILLATOR

The second mixer combines the output of the bandpass IF with the output of the variable frequency oscillator (VFO) to produce the 455 kHz IF.

The VFO produces the required frequencies for tuning LSB, USB, CW and AM signals. Capacitor C406, in the frequency determining network, is paralled by inductor L403 in series with diode CR401. This diode switches L403 in or out of the circuit depending on the magnitude of bias current impressed across its' junction. With the MODE switch (S301) in the LSB position, Diode CR401 is forward biased and switches inductor L403 into the frequency determining network. With diode CR401 forward biased the VFO will produce the 2.50135-2.70135 MHz range required to tune LSB signals. With the MODE switch(S301) in the USB or AM position, diode CR401 is reverse biased and switches L403 out of the frequency determining network. With L403 out of the network the output frequency is lowered causing the VFO to tune from 2.49865-2.69865 MHz. When the MODE switch is in the CW position, diode CR401 is partially switched on resulting in an output frequency from the VFO of 2.5-2.7 MHz. Note that when R708 (LSB adjust) is properly adjusted, it shifts the VFO frequency by 2.7 kHz an amount equal to the frequency difference between crystals Y301 and Y302 (LSB & USB). This feature allows either LSB or USB signals to be received and tuned properly without recalibration of the dial.

The mixing products of the bandpass IF and VFO are selected in the collector circuit of Q201 (second mixer). The VFO is isolated from the second mixer by an emitter follower (Q402). The output of the VFO is also provided at the rear panel at J703. Here again the VFO is isolated by emitter follower (Q403).

3.5 455 kHz IF, DETECTOR CIRCUITS AND NOISE LIMITER

Immediately following the 2nd mixer (Q201) are the mechanical filters (FL201-FL203). As normally supplied filter FL202 (2.1 kHz) has been selected for SSB reception. Filter FL202 will allow reception of AM & CW signals but it is recommended that the optional filter FL201 and FL203 (6.0 kHz & 0.5 kHz) respectively, be used in these modes of operation. Output from the mechanical filters is amplified by three transistors (Q202, Q203 and Q210) and is tuned by the three transformers T203, T204 & T205. The signal is taken from the primary of T205 to be detected and used as the AGC voltage, this is discussed in a later paragraph.

The AM detector, diode CR203, also gets its signal from the primary of T205 and is coupled to the noise limiter (CR204) thru S701, Function switch. This noise limiter only functions in the AM mode and its' output is delivered to the AM audio pre-amplifier, (Q211). The output of the AM pre-amp is coupled thru S301, MODE switch, to the AF GAIN and on to the 1st audio amplifier.

The detection of CW & SSB signals is accomplished by CR301 and CR302. These two diodes comprise a balanced demodulator circuit. The audio is developed from the product detection of the incoming 455 kHz signal and the output of the BFO, which may come from the crystal controlled SSB oscillator or the variable frequency CW oscillator. As in AM, this output is coupled through MODE switch (S301) to the AF Gain control (R711) and on to the 1st audio amplifier.

3.6 AUDIO CIRCUITS

As stated earlier the audio voltage developed by a particular detector is coupled through the MODE switch (S301)to the AF Gain control (R711). This audio voltage is amplified in three separate stages. The first audio amplifier Q207 feeds the second audio amplifier Q208 which drives the final audio output stage, which is operating push pull and consists of transistors Q701 and Q702.

The audio system has been designed to provide three different audio outputs. Jack J705 is a 3.2 ohm phono output for a speaker. Jack J706 is the 500 ohm output jack which can be used for line operation and/or Anti-Vox operation. The third audio

output is the Phone jack J711. The PHONES output is taken from the driver stage at the primary of the driver transformer T701. When using this jack the impedance of the headphones should be 500 ohms or higher. Upon inserting headphones into the PHONES jack the emitter circuits of Q701 and Q702 are disconnected disabling the outputs from the 3.2 ohm and 500 ohm jacks.

The level of audio voltage available at J706 (500 ohm output) will normally be between 5 and 15 volts which is sufficient for use with an associated transmitter in Anti-Vox operation.

3.7 BFO AND CW OSCILLATOR CIRCUITS

Separate circuits are provided for the reception of CW signals and SSB signals. Transistor Q801 and its associated circuitry comprise the variable beat frequency oscillator. This oscillator will tune 452-458 kHz by varying the BEAT FREQUENCY OSCILLATOR control, C806. The CW oscillator is switched by MODE switch, S301, and its output is coupled to the balanced demodulator through transistor Q301 and inductor L302. This oscillator is referred to as the CW oscillator as it functions only in the CW position of the mode switch.

In the reception of LSB and USB signals the MODE switch will place either Y301 or Y302 (LSB or USB) in the base circuit of Q301. Q301 now functions as an oscillator providing the necessary frequency to the balanced demodulator for the beat between the 455 kHz IF signal and the BFO. In the LSB position of the MODE switch, Y301 is in the circuit producing a frequency of 453.630 kHz. In the USB position, Y302 produces a frequency of 456.330 kHz.

3.8 AGC and "S" METER CIRCUITRY

Signal voltage is coupled from the primary of T205 to the base of the AGC detector Q204. The signal is detected in the base of Q204 with CR201 furnishing the necessary base bias. The rectified signal voltage is amplified by the AGC amplifier Q205. Transistor Q205 developes the desired AGC voltage and it is applied to the IF and RF amplifier stages as well as the "S" meter circuit.

The " FAST/SLOW" function controlled by S702, is developed by R237,R239 and C249. The parallel combination of R237, R239 and C249 create the FAST AGC discharge rate. In the SLOW position the parallel combination of R237 and C249 present a larger RC time constant resulting in a slower AGC discharge rate.

Generation of AGC voltage is delayed until the signal voltage at the base of Q204 exceeds the bias set by CR201 and R233. This bias is normally adjusted so that the AGC action is initiated with a input signal of approximately 1.5 uv. This point is referred to as the AGC threshold.

The RF GAIN control (R710) provides a manual control of the gain in the RF, 1st and 2nd mixer stages. The RF Gain control is in series with the bases and controls static bias to these stages. At its maximum clockwise setting this control places a +2.2 volt forward bias on the AGC line to the RF and mixer stages. As the control is rotated counterclockwise the bias voltage decreases, reducing the bias and therefore the gain of the stages.

The AGC voltage at the collector of Q205 is directly coupled to the base of Q206. The voltage required to operate the "S" meter is taken from the emitter follower (Q206) through the "S" meter sensitivity adjustment (R241) and thru CR202 to the "S" meter. Diode CR202 serves as reverse polarity protection for the meter movement. Resistor R706 electrically zeros the "S" meter.

3.9 REJECTION FILTER

The Rejection Filter consists of transistors Q501, Q502 and their associated components. The frequency of the notch is controlled by C503, REJECTION TUNING. This control allows the notch to be moved across the passband of the 455 kHz IF. Resistor R504 is used to adjust the depth of the notch.

This notch circuit is an inverted "Q"

multiplier. The circuitry around Q501 multiplies the "Q" of coil L501. By multiplying its' "Q", the circuit provides a narrower notch. This circuit shapes the notch and R504 sets the depth. The output of this circuit is actually a peak rather than a notch until it is inverted by Q502, then it appears as a notch when tuned through the IF passband.

3.10 MUTE CIRCUITRY

The mute circuitry consists of the transistor Q212 and its' associated components as well as FUNCTION switch S701. Transistor Q212 in conjunction with S701 provides the necessary collector potential for Q202, Q203, and Q210 (455 kHz IF Amplifiers).

With the MUTE jack J706 ungrounded the receiver will be muted due to Q212 being cut off. If a ground were provided for J706 either by a connection or an associated transmitter, transistor Q212 will be turned on, thus un-muting the receiver in all positions of the FUNCTION switch. In "STBY" the receiver is internally muted by opening the +9V supply to the emitter of Q-212.

3.11 POWER SUPPLY

The power supply of the HQ-215 has the advantage of being capable of operating from a source of 115/230 VAC 50-60 Hertz or 12 VDC without any internal wiring changes. Changes required for operation on other than 115 V, 50-60 Hertz are explained in Section 1.

3.11.1 AC POWER SUPPLY

Transformer T701 steps down the voltage from the source to a nominal voltage of approximately 19 Volts. This voltage is then rectified by the diode bridge, consisting of diodes CR601 thru CR604. This rectified voltage is then fed to the collector and base of Q601. In the base circuit of Q601 a 14V Zener regulator is used to regulate the base potential. Transistor Q601 is used as an emitter follower regulator and its output passes through the thermal circuit breaker TH601. From here the 12V supply line is taken, and also the 9V supply line originates through a dropping resistor R604. The 9V supply line is regulated by a 9V Zener Diode CR608.

3.11.2 DC POWER SUPPLY

There is no DC power supply as such. The receiver merely regulates and fuses the 12V DC source. The 12V source is applied directly to the thermal circuit breaker TH601 and from here to the +12V line and through the same dropping resistor used in the AC supply to the +9V supply line. If by some accident the 12V source is connected to the receiver in reverse polarity, diode CR607 will be forward biased causing a heavy current drain on the source and intermittently opening TH601. The intermittent opening of TH601 will cause the pilot lamps to "flash" , alerting the operator to a reverse polarity condition.

SECTION 4: ALIGNMENT AND SERVICE INSTRUCTIONS

4.1 GENERAL

This section will provide instructions for the correct servicing of the HQ-215 Receiver. It includes information on voltage measurements, trouble analysis, signal tracing and alignment procedures. It should be noted that proper tools and test equipment must be available to undertake the electrical measurements and alignments. The accuracy of the test equipment used will determine the validity of the signal level measurements and alignment data. Many of the alignment procedures may be accomplished by using the 100 kHz crystal calibrator as a signal source. This receiver has been carefully designed, constructed, inspected and aligned at the factory to provide a long period of trouble-free use. Except for an occasional touch up to compensate for component aging, alignment will normally be necessary only if frequency determining components have been replaced. The enclosure of the receiver has been designed to allow easy removal of the panels for such maintenance as is required.

4.1.1 ENCLOSURE REMOVAL

The enclosure of the HQ-215 Receiver is such that its' removal may be accomplished either partially or completely. The enclosure is made of four separate panels permitting access to a particular portion without removal of all panels. Each of these panels are inserted into the groove of the corner bars and pushed toward the front of the receiver. The screws on the back of the unit retain these panels. There are 4 screws in each of the top and bottom panels and 2 screws in each of the side panels. To remove these panels, remove the screws from the back of the panel and slide the panel toward rear of unit.

4.2 TROUBLE ANALYSIS

Many cases of trouble can be traced to improper adjustments or defective components. Troubleshooting this receiver is simple with the proper procedures and proper test equipment. In troubleshooting the receiver, one must perform various tests and make certain observations. Proper interpretation of the results of these tests will indicate the problem area. Additional tests in the problem area will then locate the bad components or assembly. In the event of a component failure assume that the defective part is not the cause of the trouble but a symptom of a more serious problem. For example, a burned resistor may result from a shorted transistor or capacitor, while a shorted transistor may be caused by a shorted capacitor or a resistor that has changed value. Making the measurements outlined in Table 4-1 will aid in isolating a problem to a particular stage or component.

An orderly process of elimination coupled with a study of the theory of operation outlined in Section 3 as well as a study of the block diagram and schematic diagram will aid in isolating trouble. An example of this would be that the receiver performs all right on AM, LSB, and USB but fails to function on CW. Inspection of the block diagram and schematic will reveal that the only circuit peculiar to CW reception is Q801 and its' associated components. Checking the voltages and components in this stage should readily yield the source of difficulty.

If the receiver is to be returned to the factory or an authorized service agency for any reason, a detailed report should accompany the receiver. A report such as this will assist in locating the difficulty with a minimum of time and expense.

IT IS REQUIRED BEFORE RETURNING ANY EQUIPMENT TO THE FACTORY THAT WRITTEN AUTHORIZATION BE OBTAINED FROM THE FACTORY.

4.3 VOLTAGE MEASUREMENTS

The voltages contained in Table 4-1 are typical readings and will vary slightly from unit to unit. The voltage measurements in Table 4-1 were made under the following conditions:

A. All measurements are from indicated terminal to chassis ground.
B. A voltmeter with a minimum input resistance of 20,000 ohms per volt should be used.
C. Set controls as follows:
   1. RF GAIN - Full Clockwise
   2. PRESELECTOR - detuned
   3. BANDSWITCH - On quiet band (band less HFO crystal)
   4. AF GAIN - On, but counter-clockwise
   5. AGC - Set for +2.2 volts at either terminal of the RF GAIN control by adjusting R233

TABLE 4-1 VOLTAGE MEASUREMENTS

SCHEMATIC DESIGNATION	COLLECTOR VOLTS	BASE VOLTS	EMITTER VOLTS
Q101	4.2	1.55	1.05
Q102	8.9	1.7	1.6
Q103	5.2	.90	1.0
Q104	6.8	1.55	1.0
Q201	7.3	1.8	1.2
Q202	7.6	3.8	3.2
Q203	7.65	0.78	0.2
Q204	4.2	0.7	0.1
Q205	0	4.2	4.6
Q206	8.2	4.8	4.2
Q207	5.0	1.2	1.55
Q208	7.4	1.2	0.64
Q209	8.0*	-0.34*	2.4*
Q210	7.65	2.0	1.4
Q211	7.6	2.33	1.85
Q212	9.0	8.0	9.0
Q301	7.2	0.1	0.15
Q401			3.2
Q402			0.9
Q403			0.35
Q501	8.0	1.3	0.8
Q502	4.0	0.66	0.14
Q601	9.4	0.8	0.26
Q701	0.8	0.8	0.26
Q702	0.8	0.8	0.26
Q801	0.3**	0.3**	9.0**

*=FUNCTION SWITCH TO CALIBRATE
**=FUNCTION SWITCH TO CW

4.4 RESISTANCE MEASUREMENTS

In transistorized equipment it is very probable that resistance readings will vary greatly from meter to meter. On many ohmmeters just changing the resistance scale will cause a different reading. With this in mind only two resistance measurements are given below, these are a check of the power supply and the 9 and 12 volt supply lines.

Control Setting
Pilot Lamp dimmer (R712) - counter-clockwise
Power Cable removed from J712

Measurements were made using a Simpson 260 VOM with negative lead of meter connected to receiver chassis.

1. Set meter to R X 100 scale and connect positive lead of meter to the junction of CR608 (9V Zener) and C604 (located on power supply module). The meter should indicate 490 Ω, ± 10%. This is a check of the 9V supply line.

2. With meter on R X 100 scale, connect positive lead to the junction of CR607 and R604 (located on power supply module). The meter should indicate 480 Ω, ±10%. This is a check of the 12V supply line.

4.5 IF ALIGNMENT

There are five separate alignment steps required to completely align the IF of this receiver:
1. 3055 kHz IF
2. 455 kHz IF
3. Rejection Tuning
4. LSB and USB Crystal Activity
5. CW Oscillator

Equipment Required for Complete IF alignment:
1. 3055 kHz Generator* (Crystal controlled Ferris Model 20 CP or equal)
2. 455 kHz Generator (Crystal controlled Ferris Model 20 CP or equal)
3. VOM or VTVM (Simpson 260, Heathkit IM-13 or equal)
4. 3055 kHz Sweep Generator (Heathkit Model IG-52 or equal)
5. Linear Amplifier and Detector with markers at 3155 and 2955 kHz
6. Oscilloscope (Tektronix 515A or equal)

7. Speaker (3.2) ohms

*For use with 3055 kHz alternate tuning method.

4.5.1 3055 kHz IF ALIGNMENT (PREFERRED METHOD)

This method of alignment should be used to align the receiver. An alternate method is explained later. The alternate method may be used when this method is not feasible.

1. Control Settings:
   RF GAIN - Full Clockwise
   AF GAIN - Full Counterclockwise, but receiver turned on
   BANDSWITCH - Position "H"
   FUNCTION - REC
   Other controls not affected during 3055 kHz alignment

2. Connect the 3055 kHz Sweep Generator thru a 0.01 MFD Capacitor to the base of the 1st mixer, Q102, located approximately in the center of the RF printed circuit board.

3. Connect the Input of the Linear Amplifier to the base of the second mixer, Q201, located just to the rear of S201 (Filter Switch) on the main P.C. Board.

4. The output of the Linear Amplifier should be connected to the scope.

5. Disable the VFO by connecting a jumper from ground to the juntion of C403, C408, and C409 (located in the bottom of the VFO Chassis).

6. These precautions should be observed to prevent distortion of picture on scope and maintain prominent markers:
   A. Detune Preselector
   B. Use Low Input Signal Level

7. Transformers T201 and T202 located on the main PC Board adjacent to Q201, are the 3055 kHz IF cans.

8. Transformers T201 and T202 must be tuned from the top and the bottom to obtain maximum amplitude of the scope trace and maintain the 200 kHz bandwidth.

9. As these transformers are tuned the amplitude of the trace will change as well as the shape. The desired trace will have maximum amplitude and the markers at the corner of the trace indicating the bandwidth.

10. The desired trace will appear as below:

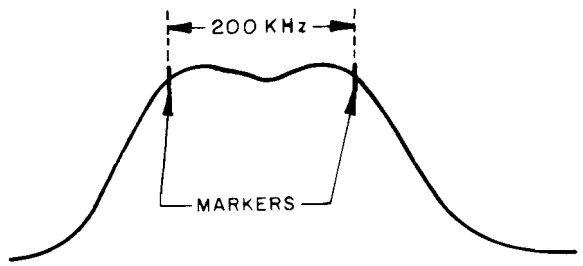

11. Remove jumper from VFO and test equipment leads from unit.

4.5.2 3055 kHz IF ALIGNMENT (ALTERNATE METHOD)

This method of alignment is to be used only as an alternate when the preferred method is not feasible. It is also noted that in lieu of 3055 kHz generator the 100 kHz calibrator in the unit may be used as a signal source and either the "S" meter or an external voltmeter used for indication.

1. Control Settings:
   RF GAIN - Full Clockwise
   AF GAIN - Full counterclockwise, but receiver turned on.
   BANDSWITCH - Position "H"
   Other controls not affected during 3055 kHz alignment

2. Connect the 3055 kHz signal Generator thru a 0.01 MFD Capacitor to the base of the first mixer, Q102, located approximately in the center of the RF PC Board.

3. Connect the positive lead of VOM or VTVM to pin 15 of J710 the main PC Board Connector and the negative lead to the chassis. The meter should read +2.2 VDC with no signal input.

4. Disable the VFO by connecting a jumper from ground to the junction of C403, C408, and C409 (located in the bottom of the VFO Chassis).

5. Connect a 1K Resistor across R207 (R207 is 10K Resistor across secondary of T201) Tune the primary of T201 (top slug in can) for a dip in AGC voltage. Maintain a 1.5-2.0 VDC AGC level during alignment. If crystal calibrator is used as signal source, turn the RF Gain down to maintain correct AGC voltage.

6. Remove the 1K Resistor across R207 and place across R204 (R204 is 10K Resistor across primary of T201) Tune the secondary of T201 (bottom slug in can) for a dip in AGC voltage.

7. Remove the 1K Resistor across R204 and place across C217 (C217 is 130 pf capacitor across secondary of T202. Tune the primary of T202 (top slug in can) for a dip in AGC voltage.

8. Remove the 1K Resistor across C217 and place across R208 (R208 is 10K across primary of T202). Tune the secondary of T202 for a dip in AGC voltage.

9. The input signal from the generator should be kept as low as possible during all alignment steps.

10. Steps 4 thru 8 must be repeated until no interaction is observed between any adjustments.

11. Remove jumper from VFO and test equipment leads from unit.

4.5.3 455 kHz IF ALIGNMENT

During the 455 kHz IF alignment the 100 kHz crystal calibrator may be used for a signal source in lieu of the 455 kHz generator. Also the "S" meter may be used as an indicating device rather than a external voltmeter.

1. Control Settings:
   RF GAIN - Full Clockwise
   AF GAIN- Max. Counterclockwise
   BANDSWITCH - To position"H"
   Function - REC
   Filter - To position "B" (2.1 kHz)
   Mode - AM
   BFO - "O"
   Rejection Tuning - Off

2. Connect the VOM or VTVM positive lead to pin 15 of J710, and negative lead to chassis.

3. Connect the 455 kHz generator to the base of Q201 (2nd Mixer), located just to the rear of S201 filter switch, through a 0.01 MFD Capacitor.

4. Adjust the generator output to obtain a reading on the voltmeter.

5. Tune T203, T204 and primary (top) of T205 (455 kHz IF Transformers) for dip on the voltmeter. T203 and T204 have only 1 adjustment, whereas T205 has 2 adjustments (primary- top and secondary - bottom). Tune secondary of T205 for a peak on the voltmeter.

6. Repeat Step 5 until no interaction is observed and all transformers are tuned for maximum gain.

7. If Rejection Tuning and the CW Oscillator are to be adjusted now, leave test equipment connected.

4.5.3.1 REJECTION TUNING ADJUSTMENT

1. Test equipment set up and control setting remain the same as for 455 kHz alignment with one exception:
   Connect 3.2 ohm speaker to J704 (3.2 ohm Audio). Rotate C503 (Rejection tuning) to "O". Check to insure that the plates are at half mesh.

2. Tune L501 (Q Multiplier Coil), located on slot filter PC Board, for a dip in AGC voltage monitored on the voltmeter.

3. When L501 reaches its' maximum dip tune R504 (Q Multiplier Gain), also located on slot filter PC Board, for maximum dip. At this point the audio must be monitored by listening to the speaker to insure that the tuning of R504 does not cause the unit to break into oscillation.

4. After it has been determined that L501 and R504 dip properly, return the rejection tuning (C503) to the OFF position leaving L501 and R504 in their "maximum dip" position.

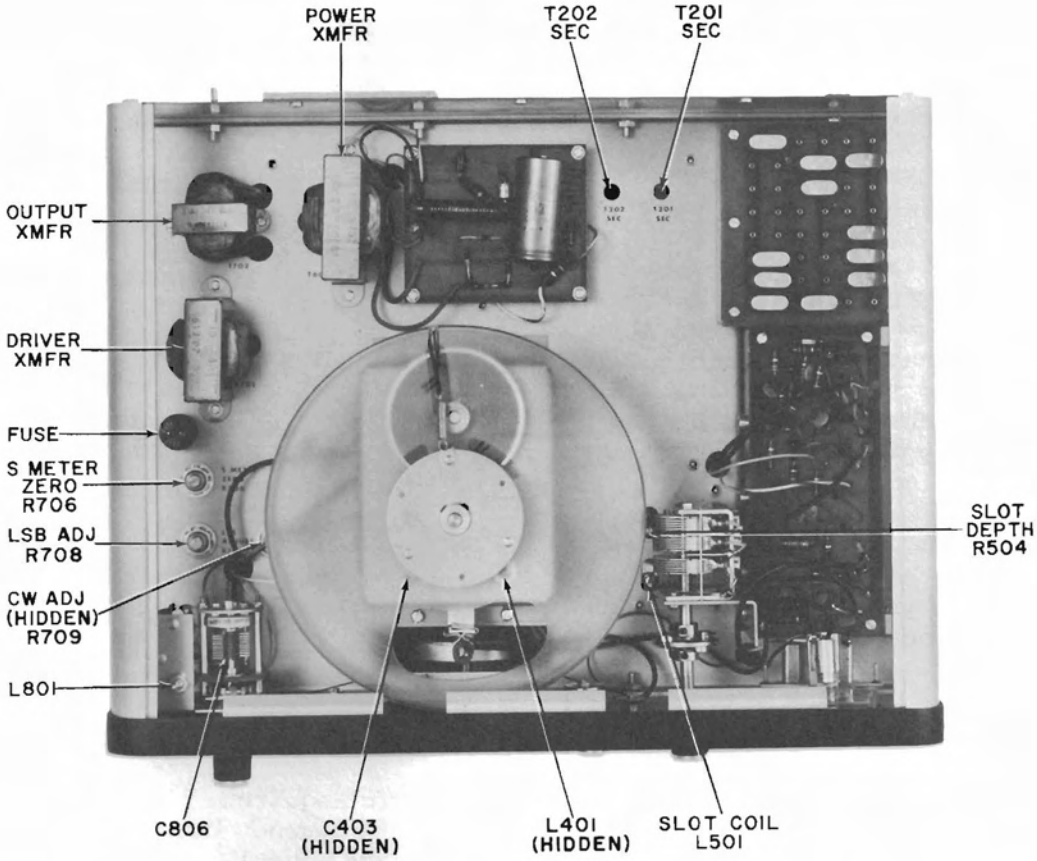

FIGURE 4-1 TOP VIEW OF HQ-215

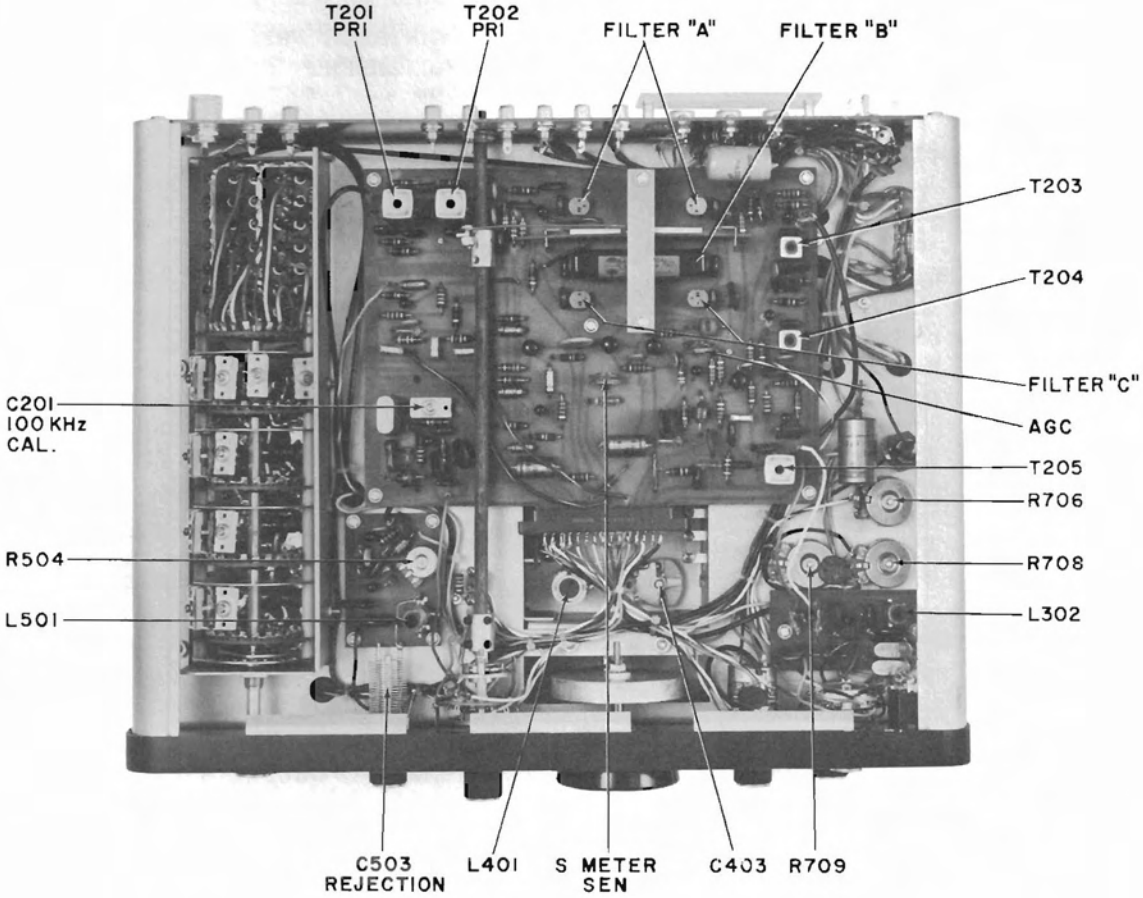

FIGURE 4-2 BOTTOM VIEW OF HQ-215

5. The voltmeter may be removed and the speaker and 455 kHz generator left connected if the LSB and USB crystal activity and CW Oscillator are to be adjusted next.

4.5.3.2 LSB AND USB CRYSTAL ACTIVITY

It is important that this adjustment be performed prior to the alignment of the CW Oscillator because the tuning of L302 will slightly "pull" the frequency of the CW Oscillator.

1. Connect the VOM or VTVM (set for the +10VDC Scale) to the collector of Q301 (negative lead to ground). Q301 is located on the BFO and Balanced Demodulator PC Board assembly.

2. Place the mode switch in either the LSB or USB Position.

3. Tune L302 (location: on the BFO and Bal. Demodulator PC Board Assembly) for a dip in collector voltage monitored on the voltmeter.

4. The activity of the LSB and USB crystals (Y301 and Y302) should be approximately the same for both positions of the Mode Switch.

5. Remove the voltmeter and leave the 455 kHz generator and speaker connected if the CW OSC is to be adjusted next.

4.5.3.3 CW OSCILLATOR ADJUSTMENT

Prior to the alignment steps below, the adjustment of the LSB and USB crystals as outlined in Section 4.5.3.2 should be made.

1. Test equipment and control setting remain the same as for REJECTION TUNING except the voltmeter is removed and the Mode Switch placed in CW position.

2. Rotate C806 (BFO Control) thru its' full 360° rotation and return to "O" Position. Check to insure that the plates of the capacitor are at half mesh when the control is setting on "O".

3. Tune L801, BFO Coil, (located behind front panel adjacent to BFO control), for zero beat as heard in the speaker.

4. Exactly 180° from the "O" Position of the BFO Control another zero beat must be heard. Check to insure this is present and that the BFO varies both sides of "O" on Front Panel.

5. All IF test equipment may be removed from the unit.

4.6 OSCILLATOR ADJUSTMENTS

The detailed alignment instructions in this section explain the alignment of the Variable Frequency Oscillator (VFO), Lower Side Band (LSB) and CW Frequency Adjustments, and the adjustment of the High Frequency Oscillator (HFO).

Equipment Required:

1. Frequency Counter (HP Model 524D or equal)
2. VOM or VTVM (Simpson 260, Heathkit IM-13 or equal)
3. Speaker (3.2 ohms)

4.6.1 VARIABLE FREQUENCY OSCILLATOR ALIGNMENT

For the VFO to be accurately aligned the use of a frequency counter is highly recommended. It is realized that the average amateur will not usually own such test equipment and therefore must use some other device. With this in mind it is suggested that the VFO can be calibrated using either a known accurate source of 2.5 MHz & 2.7 MHz or by monitoring the VFO output on a receiver that is known to be accurate at 2.5 & 2.7 MHz.

The alignment of the VFO may be accomplished with the receiver turned on and set for reception on any band or any mode of reception. The following procedure assumes the use of another receiver to monitor the VFO.

1. Connect the antenna input of the monitor receiver (tuned to exactly 2.5 MHz) to the VFO output jack, J703.

2. With the hairline set to the mark on the dial bezel turn the dial until 200 is indicated under the hairline, on the dial scale.
3. The monitor receiver should now be receiving and zeroed in on 2.5 MHz signal. If the monitor receiver indicates a frequency error tune L401, VFO Coil, until the zero beat is obtained.
4. Turn the dial on the receiver until "0" on the dial scale is under the hairline. The monitor receiver should now be tuned to 2.7 MHz.
5. The monitor receiver should now be receiving and zeroed in on a 2.7 MHz signal. If the monitor receiver indicates a frequency error tune C403, VFO capacitor, until zero beat is obtained.
6. Repeat steps 2 thru 5 as necessary to obtain a frequency of 2.7 MHz when the dial indicates "0" and a frequency of 2.5 MHz when the dial indicates "200".
7. With the dial indicating properly at "0" and "200" turn the monitor receiver to 2.6 MHz and the HQ-215 to "100" on the dial scale.
8. With the monitor receiver set for 2.6 MHz the HQ-215 should produce a 2.6 MHz signal when the dial is within ±1 dial division of 100 on the dial scale.
9. This completes the VFO alignment.

4.6.2 LOWER SIDEBAND & CW FREQUENCY ALIGNMENT

The purpose of the two adjustments made in this section are to insure that the indicated frequency is the same for CW, LSB, and USB reception.

Control Settings:

Audio Gain - ON at a comfortable listening level
RF GAIN - Maximum Clockwise
Bandswitch - 3.4
Rejection - OFF
Function - REC
Preselector - 3.4
AGC - FAST
BFO - ZERO
Mode - CW
Filter - "A" if the unit has 0.5 kHz filter, if the unit does not have this filter, use Position "B" (2.1 kHz)

1. Make certain that the dial is set where the receiver is NOT receiving any signal (Remove antenna).
2. A rushing of noise should now be present and audible from the speaker.
3. Tune the BFO control to a point where a minimum of high frequency noise is heard. This is a "Zeroing" of this control. (SEE NOTE 1)

NOTE 1:
It should be noted that once the BFO Control is zeroed in Step 3 and the dial is zeroed in Step 7, neither of these controls should be moved while adjusting R708 and R709.

4. Turn on the 100 kHz Crystal Calibrator by rotating the Function Switch to CAL.
5. Place the Filter Switch in Positon "C" if the unit has a 6 kHz filter. If the unit does not have a 6 kHz Filter, place the filter switch in Position "B".
6. Put the Mode Switch in the USB Position.
7. Rotate the dial to approximately 100 on the dial scale and zero the 100 kHz signal by monitoring the speaker. (See Note 1)
8. Turn the Mode Switch to the LSB Position and zero the signal again by turning R708 (LSB Adjust). This control is located on the chassis.
9. Turn the Mode Switch to the CW Position and zero the signal again by turning R709 (CW adjust). This control is located on the chassis.
10. Switch the Function Switch thru each of its' positions two or three times to insure that zero beat is maintained on Positions CW, LSB and USB.

4.6.3 HIGH FREQUENCY OSCILLATOR ADJUSTMENT

The adjustments outlined in this section are NOT frequency determining adjustments and none of the trimmers or the coil should be used to "PULL" any frequency or any band. These adjustments are to check and set the activity of the crystals used for the various bands.

1. Connect the VOM or VTVM (Set for ±10VDC

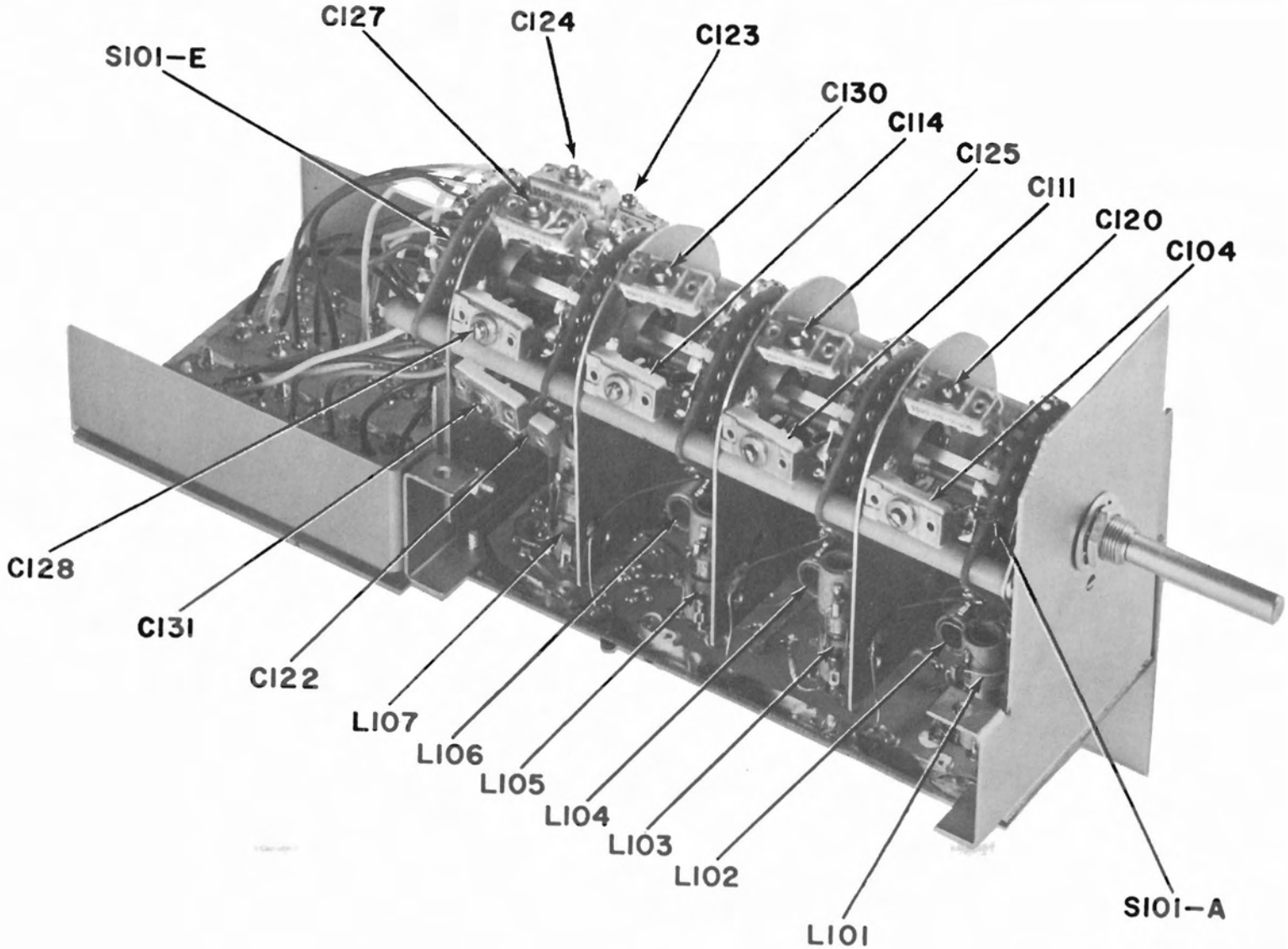

FIGURE 4-3 RF MODULE WITH BANDSWITCH

Scale) to the collector of Q104 located on the RF PC Board. (Negative lead to ground).

2. Set the bandswitch to the 3.4 position. Preset capacitor C128 by tightening and then loosening approximately 1/2 turn.

3. Tune L107, located on RF PC Board for a dip as indicated on the voltmeter. This is the ONLY position in which L107 will be tuned.

4. Rotate the bandswitch to 3.8 and tune C128, for a dip on the voltmeter. C128 must also be adjusted to obtain the best sensitivity on the 80 meter band.

5. Turn the bandswitch to positons 3.6 and 3.4 these readings should be the same as the readings on the 3.8 position. If the three readings are not balanced, use C128 as the control to balance.

6. If a crystal is in any of positions A, B or C turn the bandswitch to the position with a crystal and tune C127, located between sections D & E of the bandswitch, for a dip as indicated by the voltmeter. If crystals are in all positions balance the three readings using C124 as the balance control.

7. Place the bandswitch in the 7.2 position and tune C124, located between sections D & E of bandswitch, for a dip as indicated by the voltmeter.

8. Alternate the bandswitch between the 7.2 and 7.0 position and use C124 to balance the readings on the voltmeter for these two positions.

NOTE 2:
If any or all of positions D, E or F have crystals employed, the adjustment for 7.0 and 7.2 will also have to balance these positions. C124 will balance positions D, 7.0, 7.2, E and F.

9. Place the bandswitch in the 14.2 position and tune C123, located between sections D & E of bandswitch, for a dip as indicated on the voltmeter.

10. Alternate the bandswitch between the 14.0 and 14.2 position balancing the reading by using C123 as a balance control.

NOTE 3:
If any or all of positions G, H or I have crystals employed the adjustment for 14.0 and 14.2, C123 will also have to balance these positions G, H, 14.0, 14.2 and I.

11. Place the bandswitch in the 21.4 position and tune C122, located between sections D & E of the bandswitch, for a dip as indicated on the voltmeter.

12. Alternate the bandswitch between positions 21.0, 21.2 and 21.4 and balance the reading on the voltmeter using C122 as the balancing control.

NOTE 4:
If either or both of positions J and K have crystals employed the adjustment for 21.0, 21.2 and 21.4 will also have to balance these positions. C122 will balance positions J, 21.0, 21.2, 21.4 and K.

13. Place the bandswitch in the 28A position and tune C131, located between sections D & E of bandswitch for a dip as indicated on the voltmeter.

NOTE 5:
If either or both of positions L or 28B have crystals employed, the adjustment for L, 28A and 28B will also have to balance these positions, C131 will balance positions L, 28A and 28B.

14. This completes all Oscillator Alignments.

4.7 RF ALIGNMENT

The following detailed instructions are for the complete RF Alignment of the HQ-215.

Equipment Required:

1. Signal Generator (Ferris Model 20 CP or equal)
2. VOM or VTVM (Simpson 260, Heathkit IM-13 or equal)
3. Speaker (3.2 ohms)

Control Settings:

Audio Gain - On, level set to suit
RF GAIN - Full Clockwise
Filter - B
AGC - FAST
Mode - AM
Bandswitch - 7.0
Preselector - 7.0
Dial Scale - 0

4.7.1 COMPLETE RF ALIGNMENT

1. Connect signal generator set for 7.0 MHz to J701 (Antenna Input) located on rear panel.

2. Connect Voltmeter to Main PC Board Connector J710 pin 5 (AGC Line). (neg. lead to ground meter set for ±2.5 VDC Scale)

3. Use both the dial and generator to tune in 7.0 MHz signal. Set generator output to a level that will produce between +1.5 VDC and +2.0 VDC on the voltmeter. This level should be maintained throughout the RF Alignment.

4. Tune L101, L103 and L105 for a dip on the voltmeter. These coils must be tuned to the dip that positions the slug closest to the PC Board. Repeat tuning to insure coils have reached maximum dip.

5. Turn the bandswitch to 3.4 and the preselector to 3.5. Rotate the dial to 100.

6. Retune the signal generator to 3.5 MHz. Tune in the signal, tuning for maximum dip on the voltmeter.

7. Tune C104, C111, C114 located on the RF Switch Assembly for maximum dip on the voltmeter. Maintain from 1.5-2.0 volts on the voltmeter by reducing output of generator.

8. Place the Bandswitch to the 3.8 position and the dial to 200.

9. Tune in a 4 MHz signal from the generator and tune the preselector for maximum dip on the voltmeter.

10. The preselector must reach the dip described in Step 9 before the plates of the preselector become fully open.

11. Place the Bandswitch to the 3.4 position and the dial to 0.

12. Tune in a 3.4 MHz signal from the generator and tune the preselector for maximum dip on the voltmeter.

13. The preselector must reach the dip described in Step 12 before the plates of the preselector become fully meshed.

14. If the checks in Steps 10 & 13 are O.K. the Alignment of C104, C111 and C114 is O.K.

15. Set the Bandswitch to the 14.0 position and the dial scale to 0. Tune in a 14.0 MHz signal from the signal generator and tune the preselector for a maximum dip on the voltmeter.

16. Tune L102, L104 and L106 for maximum dip on the voltmeter.

17. Set the Bandswitch to the 28A position and the dial scale to 200. Tune in a 28.7 MHz from the signal generator and tune the preselector for a maximum dip on the voltmeter.

18. The trimmers C106, C109 and C116 should now be tuned for maximum dip on the voltmeter.

19. Return to Step 3 and repeat procedure from that point.

20. Repeat Steps 16 thru 20 as necessary to insure that all adjustments are tuned for maximum dip on the voltmeter.

21. The trimmers C106, C109 and C116 must reach a definite dip when tuned. If their tuning action is sluggish in action or they do not reach a dip, Steps 15 thru 20 should be repeated until they exhibit a definite dip.

22. This completes all alignments of the receiver.

4.8 MODULE REMOVAL

The modularized construction of the HQ-215 enhances the electrical stability of this receiver as well as provides for easy removal of a particular module. This will be found useful when trouble develops in a particular module and it is necessary to remove this module.

4.8.1 REMOVAL OF RF MODULE

This module consists of the bandswitch, the RF PC Board and their associated components. To remove this module as a complete assembly follow these instructions:

1. Rotate PRESELECTOR control fully clockwise and loosen the two allen screws in the coupling that join this control and the preselector variable capacitor.

2. Rotate the BANDSWITCH to the 3.4 position and remove the knob.

3. Remove the six screws (from the underside of the chassis) that retain the metal chassis underneath the crystal mounting portion of the RF PC Board.

4. Remove the two screws that mount the RF Board chassis to the main receiver chassis. These are located on the "lip" of the main receiver chassis that has been turned down.

5. Remove the five wires from the RF PC Board, that come from the underside of the chassis. It is recommended that a note be made of these connections when removed in order to replace properly.

6. The complete RF Module may now be removed by lifting up on the rear portion and sliding toward the back-panel to pull the switch shaft back thru the front panel.

7. This procedure is reversed to replace this module.

4.8.2 REMOVAL OF POWER SUPPLY MODULE

This module contains most of the power supply components. The remainder of the power supply components are located on the main chassis. To remove this Module only two steps are required.

1. After making note of the connections for the 8 wires these are removed.

2. Remove the four screws (one on each corner) that mount the PC Board to the standoffs on the main chassis.

3. These steps are reversed to replace the Module.

4.8.3 REMOVAL OF MAIN PC BOARD MODULE

The main PC Board is the largest PC Board in this receiver. In order to remove the module rotate the Filter Switch to Position "C".

1. Loosen the two allen screws in the coupling nearest the front panel that retains the Phenolic rod extending across this PC Board.

2. Loosen the allen screw and the screw that retain the mechanical arm to switch the filters and slide the Phenolic rod out thru the back panel.

3. Remove PC Board connector (J710) from PC Board.

4. Remove the 7 wires connected to this board, making a note of their respective positions before removal.

5. Remove the 5 screws that mount the PC Board to the standoffs on the main chassis.

6. Reverse this procedure to re-install this module.

4.8.4 REMOVAL OF "Q MULTIPLIER" MODULE

The "Q Multiplier" module contains the circuitry for the rejection tuning or notch filter.

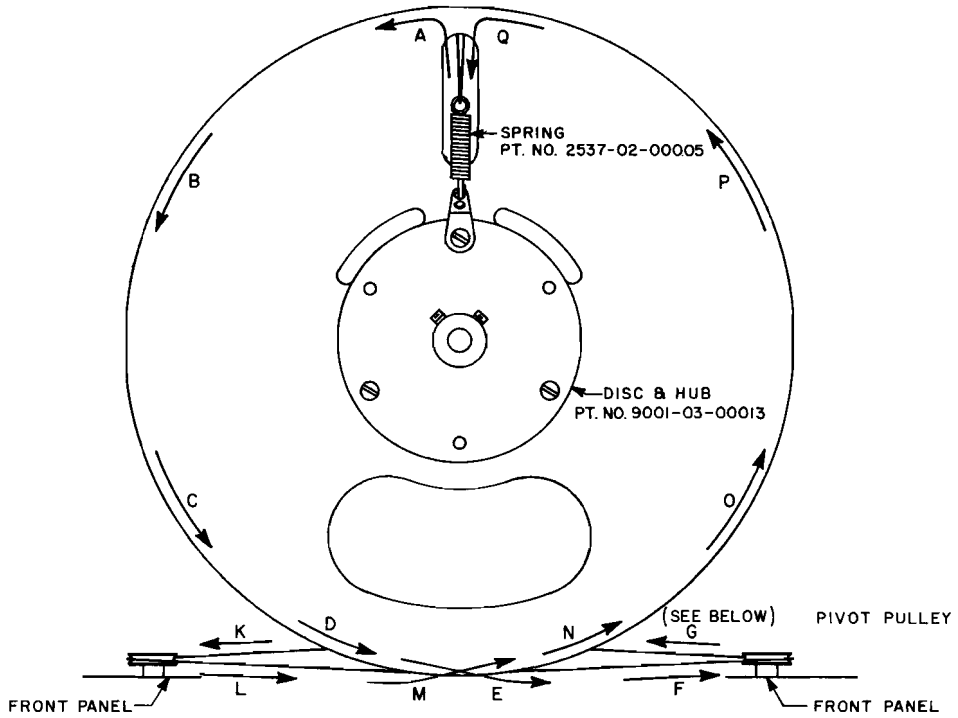

VIEW FROM TOP OF UNIT

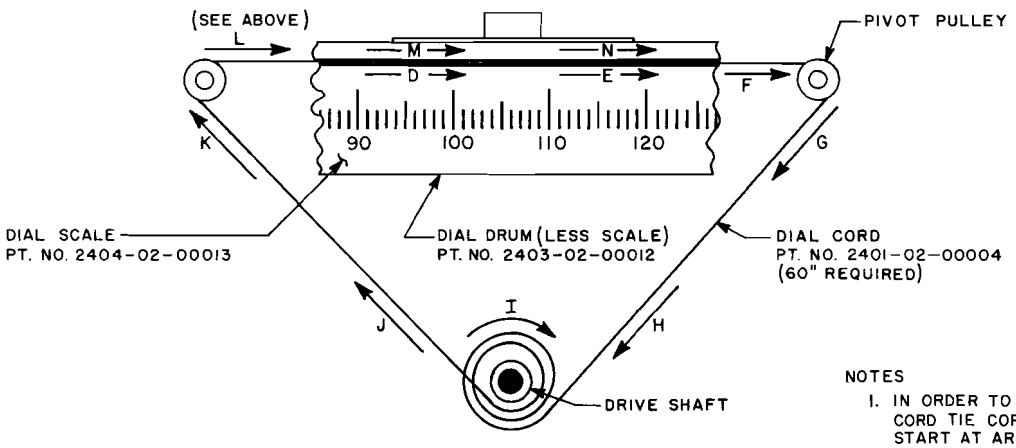

VIEW THRU FRONT PANEL

NOTES

1. IN ORDER TO RESTRING DIAL CORD TIE CORD TO SPRING & START AT ARROW "A" & PROCEED ALPHABETICAL SEQUENCE FOLLOWING THE ARROWS.
2. REFER TO TEXT FOR PROPER PLACEMENT OF DIAL DRUM ON VFO CHASSIS.
3. SUGGEST USE OF MASKING TAPE TO HOLD CORD TO PULLEYS AND TO DRUM WHILE STRINGING CORD.

RESTRINGING DIAL DRIVE MECHANISM
FIGURE 4-4

1. Remove the two wires from the Rejection Tuning Control (C503) that connect to this module.

2. Remove the other two wires that connect to this module, making a note of all wired connections.

3. Remove the four screws(1 on each corner) from the PC Board.

4. Re-install by reversing these steps.

4.8.5 REMOVAL OF BFO & BAL-DE-MOD MODULE

1. Make note of all wiring connections and remove all 7 wires from PC Board.

2. Remove 2 screws retaining board on standoffs.

3. Reverse these 2 steps to re-install this module.

4.8.6 REMOVAL OF DIAL

1. Turn frequency control knob until approximately 100 on the dial scale is under the hairline.

2. Remove the dial cord by slipping one knot end from the spring on the hub.

3. Loosen the two screws in the hub that retain the drum on the shaft of the VFO capacitor. DO NOT DISTURB THIS SETTING OF THE VFO CAPACITOR.

4. Lift dial drum up, tilting if necessary to clear obstructions.

5. To re-install see Figure 4-4 to restring the dial and reverse the above steps.

6. If the dial is removed the calibration of the VFO should be checked after reinstalling drum.

4.8.7 REMOVAL OF VFO CHASSIS ASSEMBLY

Set Dial Drum in vicinity of 100 on the dial scale. The VFO Chassis may then be removed without removing the dial drum.

1. Remove the dial cord and the 4 wires on TB401 on the side of the VFO Chassis.

2. Remove the pilot lamp socket from its mounting bracket.

3. The VFO Chassis may now be removed by removing the 4 screws that mount it on the main chassis.

4. Reverse this procedure to re-install this chassis assembly.

SECTION 5: SPECIFICATIONS

5.1 FREQUENCY COVERAGE

The HQ-215 Receiver is capable of receiving on any frequency within the range of 3.4-30 MHz. The receiver covers this range in 24-200 kHz segment. These segments are selectable with a front panel bandswitch. The receiver provides a crystal socket for each 200 kHz segment with crystals normally supplied, the receiver will provide complete coverage of 80, 40, 20, 15 and the portion of the 10 meter band from 28.5 MHz to 28.7 MHz. Additional coverage of the 10 meter band is covered by optional crystals. This coverage is accomplished with the 11 crystals supplied with the receiver. Other crystals may be added or substituted for those furnished to select any 200 kHz segment within the range of 3.4-30.2 MHz.

5.2 RECEIVER SPECIFICATIONS

Ambient Temperature	0°C-50°C
Antenna Input	50-75 ohms - Unbalanced
Audio Response	250 Hz-6.5 kHz, ±3 db
Calibrator	100 kHz Crystal controlled
Audio Output	3.2 ohms Speaker 500 ohms
Audio Output Level	Greater than 1.5 Watts with less than 10% distortion.
MODES	AM, CW, USB, LSB
Frequency stability	Less than 100 Hertz per hour. Over ambient temperature range stability is ±1 kHz + crystal stability
Frequency Readout	±200 Hertz on all bands
Calibration Accuracy	±500 Hertz between 100 kHz calibration points
SSB/CW Sensitivity	Less than 0.5 uv for 10db signal plus noise to noise ratio
AM Sensitivity	Averages 1.0uv for 10db signal plus noise to noise ratio
Selectivity	2.1 kHz mechanical filter with 2.1 shape factor
Image Rejection	Better than -40 db
Beat Frequency Oscillator	Variable, ±3 kHz, tunes 452-458 kHz
Noise Limiter	Self-Adjusting series type
Rejection Tuning	Provides an additional 40 db rejection of unwanted heterodynes and carriers
A.G.C	Selectable-Slow/Fast. Attack time less than 5 msec. Slow Release greater than 2 sec. Fast release less than 0.5 sec. Less than 10db output change with 2 uv to 20,000 uv input change
"S" Meter	Calibrated 1-9 in steps approximately 6db. Adjusted for approximately 50uv at S-9
Power Requirements	117/234 Volt 50-60 Hertz 19 Watts 12-15 VDC Negative Ground only
Size	6.8"-H, 15.8"-W, 14"-D
Weight	21 pounds

5.3 SEMICONDUCTOR COMPLEMENT

The HQ-215 Receiver is fully transistorized. The transistor complement is made up of 26 silicon transistors. In addition to the transistors there are 13 diodes and 2 Zener voltage regulators. The functions of the transistors and diodes are listed in Tables 5-1 and 5-2 respectively.

TABLE 5-1 TRANSISTOR COMPLEMENT

SYMBOL	TYPE	FUNCTION
Q101	2N3564	RF Amplifier
Q102	2N3564	First Mixer
Q103	2N3564	High Frequency Oscillator
Q104	2N3564	Emitter Follower
Q201	2N3693	Second Mixer
Q202	2N3693	455 kHz IF Amplifier
Q203	2N3693	455 kHz IF Amplifier
Q204	2N3693	A.G.C. Detector
Q205	2N3638	A.G.C. Amplifier
Q206	2N3567	"S" Meter Amplifier
Q207	2N3693	First Audio Amplifier
Q208	2N3567	Second Audio Amplifier
Q209	2N3693	100 kHz Calibrator
Q210	2N3693	455 kHz IF Amplifier
Q211	2N3567	Audio Pre-Amp (AM only)
Q212	2N3638	Mute
Q301	2N3693	Beat Frequency Oscillator
Q401	2N3564	Variable Frequency Oscillator
Q402	2N3564	Emitter Follower
Q403	2N3564	Emitter Follower
Q501	2N3693	"Q" Multiplier
Q502	2N3564	"Q" Multiplier Invertor
Q601	40310	Regulator-Emitter Follower
Q701	40310	Final Audio Amplifier
Q702	40310	Final Audio Amplifier
Q801	2N3564	CW Oscillator

TABLE 5-2 DIODE COMPLEMENT

SYMBOL	TYPE	FUNCTION
CR201	1N541	Bias-AGC Detector
CR202	1N541	Reverse Polarity Protection (Meter)
CR203	1N541	AM Detector
CR204	1N541	Noise Limiter
CR301	1N541	Balanced De-Modulator
CR302	1N541	Balanced De-Modulator
CR401	1N914A	Voltage Variable Resistor
CR601	TS-4	Power Supply Rectifier
CR602	TS-4	Power Supply Rectifier
CR603	TS-4	Power Supply Rectifier
CR604	TS-4	Power Supply Rectifier
CR606	VR-14A	Power Supply Regulator (14 Volt)
CR607	1N4719	Reverse Polarity Protection (DC)
CR608	VR-9A	Power Supply Regulator (9 Volt)
CR701	TS-4	Bias-Final Audio Amplifiers

5.4 HFO CRYSTAL SPECIFICATIONS

Crystals for use in the High Frequency Oscillator (HFO) may be ordered from Hammarlund Manufacturing Company or from a crystal manufacturer of your choice.

If ordering crystals from Hammarlund, specify the lowest signal frequency of the particular 200 kHz segment to be covered. Details for specifying the part number are explained below. In ordering crystals directly from a crystal manufacturer the specifications below should be furnished if the manufacturer does not already have these in his possession. A list of approved vendors will be supplied upon request.

DETAILED SPECIFICATIONS

1. Crystal frequency = Lowest signal frequency + 3.155 MHz
2. Crystal Holder to be HC-6/u as below:

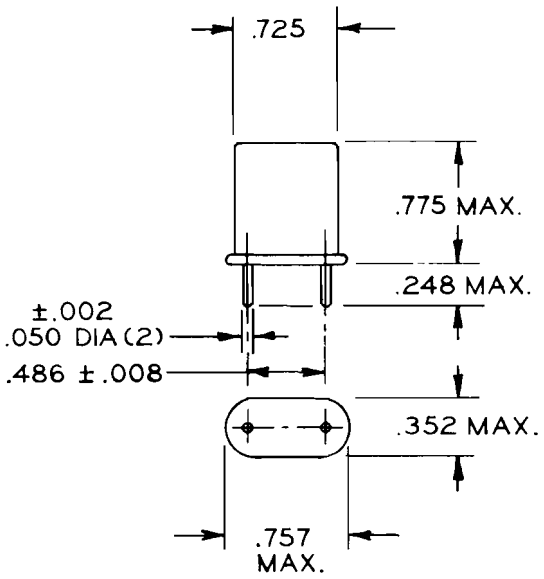

3. Crystal Frequency requirements:
   A. For signal frequencies from 3.2 MHz through 14.8 MHz mode of operation is fundamental.
   B. For signal frequencies from 15.0 MHz through 30.0 MHz mode of operation is 3rd overtone mode parallel resonance with 32pf load capacitance. Similiar to type CR-23.
4. Lowest signal frequency = 3.2 MHz-14.8 MHz
   Crystal Frequency = 6.555-17.955 MHz
   Maximum Resonant Resistance =
   6.555-7.955 MHz = 50 ohms
   7.755-10.155 MHz = 35 ohms
   10.355-17.955 MHz = 25 ohms
5. Lowest signal frequency = 15.0 MHz-30.0 MHz
   Crystal Frequency = 18.055-32.955 MHz
   Maximum Resonant Resistance = 40 ohms
6. Hammarlund Part Number Explanation: 2305-02 is basic part number, the last five digits are determined by the lowest signal frequency. Example 1: Lowest signal frequency = 3.40 MHz therefore last 5 digits, 00340 and entire part number is 2305-02-00340. Example 2: Lowest signal frequency 14.20 MHz therefore last 5 digits = 01420, complete # is 2305-02-01420.
7. Crystals Normally Supplied

Item	Lowest Freq. (MHz)	Crystal Freq. (MHz)	Hammarlund P/N
Y101	3.40	6.555	2305-02-00340
Y102	3.60	6.755	2305-02-00360
Y103	3.80	6.955	2305-02-00380
Y108	7.00	10.155	2305-02-00700
Y109	7.20	10.355	2305-02-00720
Y114	14.00	17.155	2305-02-01400
Y115	14.20	17.355	2305-02-01420
Y118	21.00	24.155	2305-02-02100
Y119	21.20	24.355	2305-02-02120
Y120	21.40	24.555	2305-02-02140
Y123	28.50	31.655	2305-02-02850

Item	Description CAPACITORS	Hammarlund Part Number
C1	Dur Mica, DM-15, 62 pf, 2%	1519-01-00056
C2	Dur Mica, DM-15, 85 pf, 1%	1519-01-00002
C3	Dur Mica, DM-15, 85 pf, 1%	1519-01-00002
C4	Dur Mica, DM-15, 62 pf, 2%	1519-01-00056
C101	Disc Ceramic, .01 MFD, 100V	1509-01-01042
C102	Variable, 3 sections, 8.5-176 pf per section	1503-02-00003
C103	Dur Mica, DM-15, 240 pf, 1%	1519-02-00054
C104	Trimmer 24-200 pf	1521-01-00106
C105	Dur Mica, DM-15, 5 pf, 10%	1519-01-00003
C106	Trimmer part of C102	
C107	Disc Ceramic, .01 MFD, 100V	1509-01-01042
C108	Disc Ceramic, .01 MFD, 100V	1509-01-01042
C109	Trimmer, part of C102	
C110	Disc Ceramic, .01 MFD, 100V	1509-01-01042
C111	Trimmer, 24-200 pf	1521-01-00106
C112	Dur Mica, DM-15, 240 pf, 1%	1519-02-00054
C113	Disc Ceramic, .01 MFD, 100V	1509-01-01042
C114	Trimmer, 24-200 pf	1521-01-00106
C115	Dur Mica, DM-15, 240 pf, 1%	1519-02-00054
C116	Trimmer, part of C102	
C117	Disc Ceramic, .01 MFD, 100V	1509-01-01042
C118	Electrolytic, 25MFD, 6.4V	1515-02-04011
C119	Disc Ceramic, .01 MFD, 100V	1509-01-01042
C120	Trimmer, 24-200 pf	1521-01-00106
C121	Disc Ceramic, .01 MFD, 100V	1509-01-01042
C122	Trimmer, 14-150 pf	1521-01-00105
C123	Trimmer, 14-150 pf	1521-01-00105
C124	Trimmer, 90-400 pf	1521-01-00110
C125	Trimmer, 24-200 pf	1521-01-00106
C126	Dur Mica, DM-15, 150 pf, 5%	1519-01-00034
C127	Trimmer, 90-400 pf	1521-01-00110
C128	Trimmer, 90-400 pf	1521-01-00110
C129	Dur Mica, DM-15, 220 pf, 5%	1519-01-00007
C130	Trimmer, 24-200 pf	1521-01-00106
C131	Trimmer, 7-100 pf	1521-01-00104
C132	Dur Mica, DM-15. 15 pf, 5%	1519-01-00084
C133	Disc Ceramic, .01 MFD, 100V	1509-01-01042
C134	Dur Mica, DM-15, 15 pf. 5%	1519-01-00084
C135	Dur Mica. DM-15. 350 pf, 20%	1519-02-00053
C136	Disc Ceramic, .01 MFD, 100V	1509-01-01042
C137	Disc Ceramic .01 MFD, 100V	1509-01-01042
C138	Disc Ceramic, .01 MFD, 100V	1509-01-01042
C139	Dur Mica DM-15,10 pf, ±5%	1519-01-00015
C201	Trimmer. 7-100 pf	1521-01-00104
C202	Dur Mica, DM-15, 430 pf, 1%	1519-02-00029
C203	Dic Ceramic, .1 MFD, 25V	1509-01-01043
C204	Dur Mica, DM-19, 2200 pf, 5%	1519-01-03024
C205	Disc Ceramic, .1 MFD, 25V	1509-01-01043
C206	Disc Ceramic, .1 MFD, 25V	1509-01-01043
C207	Dur Mica, DM-15, 3 pf, ±.5PF	1519-01-00011
C208	Dur Mica, DM-15, 130 pf, 1%	1519-02-00041
C209	Dur Mica, DM-15, 130 pf, 1%	1519-02-00041
C210	Dis Ceramic, .1 MFD, 25V	1509-01-01043
C211	Disc Ceramic, .01 MFD, 100V	1509-01-01042
C212	Dur Mica, DM-15, 15 pf, 5%	1519-01-00084
C213	Dur Mica, DM-15. 5 pf, 10%	1519-01-00004
C214	Dur Mica, DM-15, 130 pf, 1%	1519-02-00041
C215	Disc Ceramic, .1 MFD, 25V	1509-01-01043
C216	Dur Mica, DM-15, 15pf, 5%	1519-01-00084
C217	Dur Mica, DM-15, 130pf, 1%	1519-02-00041
C218	Disc Ceramic, .01 MFD, 100V	1509-01-01042
C219	Disc Ceramic, .1 MFD, 25V	1509-01-01043
C220	Dur Mica, DM-15, 330pf, 10%	1519-02-00071
C221	Disc Ceramic, .1 MFD, 25V	1509-01-01043
C222	Dur Mica, DM-15. 130 pf. 1%	1519-02-00041

Item	Description Capacitors (con't)	Hammarlund Part Number
C223	Dur Mica DM-15,130 pf 1%	1519-02-00041
C224	Dur Mica DM-15. 130 pf, 1%	1519-02-00041
C225	Disc Ceramic, .01 MFD, 100V	1509-01-01042
C226	Dur Mica. DM-15, 150 pf, 5%	1519-02-00034
C227	Dur Mica, DM-15. 150 pf, 5%	1519-02-00034
C228	Dur Mica, DM-15, 150 pf, 5%	1519-02-00034
C229	Dur Mica, DM-15,1000 pf, 5%	1519-01-00101
C232	Disc Ceramic, .1 MFD, 25V	1509-01-01043
C233	Disc Ceramic, .1 MFD, 25V	1509-01-01043
C234	Disc Ceramic, .1 MFD, 25V	1509-01-01043
C236	Dur Mica, DM-15, 130 pf, 1%	1519-02-00041
C237	Disc Ceramic, .01 MFD, 100V	1509-01-01042
C238	Disc Ceramic, .1 MFD, 25V	1509-01-01043
C239	Disc Ceramic, .1 MFD, 25V	1509-01-01043
C240	Polyester film, .01 MFD, 10%	1528-01-04001
C242	Dur Mica, DM-15, 200 pf, 5%	1519-02-00079
C243	Dur Mica, DM-15, 120 pf, 5%	1519-01-00052
C244	Dur Mica, DM-15, 240 pf, 1%	1519-02-00054
C246	Dur Mica. DM-15, 180 pf, 5%	1519-01-00089
C247	Disc Ceramic, .1 MFD, 25V	1509-01-01043
C248	Disc Ceramic, .1 MFD, 25V	1509-01-01043
C249	Electrolytic, 80 MFD, 16V	1515-02-04016
C251	Disc Ceramic, .01 MFD, 100V	1509-01-01042
C252	Disc Ceramic, .01 MFD, 100V	1509-01-01042
C253	Disc Ceramic, .01 MFD, 100V	1509-01-01042
C254	Polyester film, .01 MFD, 10%	1528-01-04001
C256	Polyester film, .01 MFD, 10%	1528-01-04001
C257	Electrolytic, 6.4 MFD. 25V	1515-02-04001
C258	Electrolytic, 80 MFD, 16V	1515-02-04016
C259	Electrolytic, 50 MFD, 6.4V	1515-02-04011
C261	Electrolytic, 6.4 MFD, 25V	1515-02-04001
C262	Electrolytic, 50 MFD, 6.4V	1515-02-04011
C263	Disc Ceramic, .02 MFD, 20%	1509-01-01041
C264	Disc Ceramic, .01 MFD, 100V	1509-01-01042
C266	Electrolytic, 6.4 MFD, 25V	1515-02-04001
C267	Disc Ceramic, .1 MFD, 25V	1509-01-01043
C268	Disc Ceramic, .1 MFD, 25V	1509-01-01043
C269	Dur Mica, DM-15, 130 pf, 1%	1519-02-00041
C271	Disc Ceramic, .01 MFD, 100V	1509-01-01042
C301	Disc Ceramic, .1 MFD, 25V	1509-01-01043
C302	Disc Ceramic, .01 MFD, 100V	1509-01-01042
C303	Disc Ceramic, .1 MFD, 25V	1509-01-01043
C304	Dur Mica, DM-15, 430 pf, 1%	1519-02-00029
C305	Dur Mica, DM-19, 2200 pf, 5%	1519-01-03024
C401	Dur Mica, DM-15, 180pf, 5%	1519-01-00089
C402	Variable	1501-02-00004
C403	Variable	1501-02-00003
C404	Dis Ceramic,.01 MFD, 100V	1509-01-01042
C405	Dur Mica, DM-15, 27 pf, 5%	1519-02-00076
C406	Dur Mica, DM-19, 3300 pf, 5%	1519-01-03012
C407	Dur Mica, Dm-19, 1500 pf, 5%	1519-02-03022
C408	Dur Mica, DM-15, 470 pf, 2%	1519-02-00102
C409	Disc Ceramic, .01 MFD, 100V	1509-01-01042
C410	Disc Ceramic, .01 MFD, 100V	1509-01-01042
C411	Disc Ceramic, .01 MFD, 100V	1509-01-01042
C412	Disc Ceramic, .01 MFD, 100V	1509-01-01042
C413	Dur Mica, DM-15, 9 pf, ±.5 pf	1519-01-00014
C414	Dur Mica, DM-15, 9 pf, ±.5 pf	1519-01-00014
C416	Disc Ceramic, .01 MFD, 100V	1509-01-01042
C501	Dur Mica, DM-15, 470 pf, 10%	1519-01-00051
C502	Disc Ceramic, .01 MFD, 100V	1509-01-01042
C503	Variable	1501-02-00001
C504	Dur Mica, DM-19, 1000 pf, 5%	1519-01-03005
C506	Dur Mica, DM-19, 3300 pf, 5%	1519-02-03012
C507	Disc Ceramic, .1 MFD, 25V	1509-01-01043

Item	Description Capacitors (con't)	Hammarlund Part Number
C508	Disc Ceramic, .01 MFD, 100V	1509-01-01042
C601	Disc Ceramic, .0027 MFD 1.4 KVDC	1509-01-01046
C602	Dics Ceramic, .0027 MFD, 1.4 KVDC	1509-01-01046
C603	Electrolytic, 1000 MFD, 50V	1515-02-04019
C604	Electrolytic, 640 MFD	1515-02-04024
C701	Electrolytic, 6.4 MFD, 25V	1515-02-04001
C702	Plastic, 1MFD, 200V	1528-01-01010
C703	Disc Ceramic, .1MFD, 25V	1509-01-01043
C704	Disc Ceramic, .1MFD, 25V	1509-01-01043
C705	Disc Ceramic, .1MFD, 25V	1509-01-01043
C801	Disc Ceramic, .01MFD, 100V	1509-01-01042
C802	Dur Mica, DM-19, 1200 pf, 5%	1519-01-03003
C803	Polyester film, .033 MFD, 10%	1528-01-04002
C804	Disc Ceramic, .1 MFD, 25V	1509-01-01043
C806	Variable	1501-02-00002
C807	Dur Mica, DM-15, 120 pf, 5%	1519-01-00052
CR201	Diode, Germanium, 1N541	4823-01-00004
CR202	Diode, Germanium, 1N541	4823-01-00004
CR203	Diode, Germanium, 1N541	4823-01-00004
CR204	Diode, Germanium, 1N541	4823-01-00004
CR301	Diode, Germanium, 1N541	4823-01-00004
CR302	Diode. Germanium, 1N541	4823-01-00004
CR401	Diode, Silicon, 1N914A	4829-01-00001
CR601	Diode, Silicon, TS-4	4805-02-00102
CR602	Diode, Silicon, TS-4	4805-02-00102
CR603	Diode, Silicon, TS-4	4805-02-00102
CR604	Diode. Silicon, TS-4	4805-02-00102
CR606	Diode. Zener 14V, 5% 1 Watt	4833-01-00010
CR607	Diode, Silicon, 1N4719	4811-01-00001
CR608	Diode, Zener, 9V, 5% 1 Watt	4833-01-00006
CR701	Diode. Silicon, TS-4	4805-02-00102
F701	Fuse, 3/8 Ampere	5134-01-00208
FL1	Filter Assembly (completely wired) Includes C1, C2, C3, C4, L1, L2 & L3	PL9036-03-00002
FL201	Filter, Mechanical, 455 kHz (BW-6 kHz)	2723-01-00001
FL202	Filter, Mechanical, 455 kHz (BW-2.1 kHz)	2723-01-00002
FL203	Filter, Mechanical, 455 kHz (BW-0.5 kHz)	2723-01-00003
I701	Lamp #1813 (12V)	3901-01-00002
I702	Lamp #1813 (12V)	3901-01-00002
J701	Connector, Coax (Antenna)	2111-01-00004
J702	Connector (HF Osc. output)	2106-01-00002
J703	Connector (VFO output)	2106-01-00002
J704	Connector, (3.2 Ohm Speaker)	2106-01-00002
J705	Connector, (500 Ohm Speaker)	2106-01-00002
J706	Connector, (Mute)	2106-01-00002
J707	Connector	2106-01-00002
J708	Connector	2106-01-00002

Item	Description	Hammarlund Part Number
J709	Connector	2106-01-00002
J710	Connector 15 Pin	2116-01-00005
J711	Connector, (Phone Jack)	2109-02-00005
J712	Connector, 8 pin	2101-01-00001
L1	Coil	1806-02-00026
L2	Coil	1806-02-00028
L3	Coil	1806-02-00026
L101	Coil, Antenna	1804-02-00066
L102	Coil, R.F.	1805-02-00073
L103	Coil. Interstage	1804-02-00067
L104	Coil. R.F.	1805-02-00073
L105	Coil, Interstage	1804-02-00068
L106	Coil, R.F.	1805-02-00073
L107	Coil, Oscillator	1811-02-00033
L201	Choke, 2.5 MH	1802-01-00015
L202	Choke, 200 uH	1803-01-00010
L203	Choke, 200 uH	1803-01-00010
L204	Choke, 2.5 MH	1802-01-00015
L301	Choke, 200 uH	1803-01-00010
L302	Coil, Oscillator	1804-02-00069
L401	Coil, VFO	1802-02-00052
L402	Choke, 1 MH	1802-02-00002
L403	Choke 15 MH	1804-01-00021
L501	Coil. Slot Filter	1803-01-00111
L502	Choke, 1 MH	1802-02-00002
L801	Coil, 60-120 uH	1803-01-00004
M701	Meter	2902-02-00015
Q101	Transistor, Silicon, 2N3564	4858-01-00001
Q102	Transistor, Silicon, 2N3564	4858-01-00001
Q103	Transistor, Silicon, 2N3564	4858-01-00001
Q104	Transistor, Silicon, 2N3564	4858-01-00001
Q201	Transistor, Silicon, 2N3693	4857-01-00002
Q202	Transistor, Silicon, 2N3693	4857-01-00002
Q203	Transistor, Silicon, 2N3693	4857-01-00002
Q204	Transistor, Silicon, 2N3693	4857-01-00002
Q205	Transistor, Silicon, 2N3638	4849-01-00001
Q206	Transistor, Silicon, 2N3567	4859-01-00001
Q207	Transistor, Silicon, 2N3693	4857-01-00002
Q208	Transistor, Silicon, 2N3567	4859-01-00001
Q209	Transistor, Silicon, 2N3693	4857-01-00002
Q210	Transistor, Silicon, 2N3693	4857-01-00002
Q211	Transistor, Silicon, 2N3567	4859-01-00001
Q212	Transistor. Silicon, 2N3638	4849-01-00001
Q301	Transistor, Silicon, 2N3693	4857-01-00002
Q401	Transistor, Silicon, 2N3564	4858-01-00001
Q402	Transistor, Silicon, 2N3564	4858-01-00001
Q403	Transistor, Silicon, 2N3564	4858-01-00001
Q501	Transistor, Silicon, 2N3693	4857-01-00002
Q502	Transistor, Silicon, 2N3564	4858-01-00001
Q601	Transistor, Silicon, RCA-40310	4861-01-00002

Item	Description	Hammarlund Part Number
Q701	Transistor, Silicon, RCA-40310	4861-01-00002
Q702	Transistor. Silicon, RCA-40310	4861-01-00002
Q801	Transistor, Silicon, 2N3564	4858-01-00001
	ALL RESISTORS ARE ±10%, ½ WATT UNLESS OTHERWISE SPECIFIED	
R102	6.8 K	4703-01-00342
R103	560 Ohms	4703-01-00329
R104	1 K	4703-01-00332
R105	10 K	4703-01-00344
R107	6.8 K	4703-01-00342
R108	100 Ohms	4703-01-00320
R109	1 K	4703-01-00332
R111	22 K	4703-01-00348
R112	3.9 K	4703-01-00339
R113	33 Ohms	4703-01-00314
R114	220 Ohms	4703-01-00324
R116	2.7 K	4703-01-00337
R117	330 Ohms	4703-01-00326
R118	470 Ohms	4703-01-00328
R119	2.2 K	4703-01-00336
R121	8.2 K	4703-01-00343
R122	1 K	4703-01-00332
R123	100 Ohms	4703-01-00320
R201	68 K	4703-01-00354
R202	10 K	4703-01-00344
R203	1 K	4703-01-00332
R204	10 K	4703-01-00344
R205	27 K	4703-01-00349
R206	1 K	4703-01-00332
R207	10 K	4703-01-00344
R208	10 K	4703-01-00344
R209	1 K	4703-01-00332
R210	27 K	4703-01-00349
R211	22 K	4703-01-00348
R212	33 K	4703-01-00350
R213	1 K	4703-01-00332
R214	1 K	4703-01-00332
R215	100 Ohms	4703-01-00320
R216	5.6 K	4703-01-00341
R217	100 K	4703-01-00356
R219	1 K	4703-01-00332
R221	2.2 K	4703-01-00336
R222	470 Ohms	4703-01-00328
R223	5.6 K	4703-01-00341
R224	5.6 K	4703-01-00341
R226	220 Ohms	4703-01-00324
R227	47 K	4703-01-00352
R231	470 Ohms	4703-01-00328
R232	1.5 K	4703-01-00334
R233	Variable, 4 K	4734-01-00002
R234	100 Ohms	4703-01-00320
R236	3.9 K	4703-01-00339
R237	18 K	4703-01-00347
R238	2.2 K	4703-01-00336
R239	8.2 K	4703-01-00343
R241	Variable, 4K	4734-01-00002
R242	470 K	4703-01-00364
R243	100 K	4703-01-00356
R244	1 MEG	4703-01-00368
R246	470 K	4703-01-00364

Item	Description Resistors (con't)	Hammarlund Part Number
R247	470 K	4703-01-00364
R248	56 K	4703-01-00353
R249	10 K	4703-01-00344
R251	1 K	4703-01-00332
R252	5.6 K	4703-01-00341
R253	470 Ohms	4703-01-00328
R254	15 K	4703-01-00346
R256	3.3 K	4703-01-00338
R257	100 Ohms	4703-01-00320
R258	33 K	4703-01-00350
R259	68 K	4703-01-00354
R260	330 K	4703-01-00362
R261	10 K	4703-01-00344
R263	6.8 K	4703-01-00342
R264	1 K	4703-01-00332
R265	470 Ohms	4703-01-00328
R266	5.6 K	4703-01-00341
R267	470 Ohms	4703-01-00328
R301	270 Ohms	4703-01-00325
R302	270 Ohms	4703-01-00325
R303	27 K	4703-01-00349
R304	270 Ohms	4703-01-00325
R305	47 Ohms	4703-01-00318
R306	3.3 K	4703-01-00338
R401	8.2 K	4703-01-00343
R402	8.2 K	4703-01-00343
R403	10 K	4703-01-00344
R404	1 K	4703-01-00332
R406	2.2 K	4703-01-00336
R407	10 K	4703-01-00344
R408	68 K	4703-01-00354
R409	10 K	4703-01-00344
R411	1 K	4703-01-00332
R501	47 K	4703-01-00352
R502	10 K	4703-01-00344
R503	1.5 K	4703-01-00334
R504	Variable, 10 K (slot depth)	4734-01-00003
R506	33 K	4703-01-00350
R507	33 K	4703-01-00350
R508	1 K	4703-01-00332
R509	4.7 K	4703-01-00340
R602	270 Ohms, 1 Watt	4704-01-00625
R603	1 Ohm, 10 Watts	4714-01-00050
R604	43 Ohms, 5%, 1 Watt	4704-02-00714
R701	470 Ohms, 1 Watt	4704-01-00628
R702	470 Ohms, 1 Watt	4704-01-00628
R703	10 K	4703-01-00344
R704	2.2 Ohms, 5%	4703-02-00383
R705	2.2 Ohms, 5%	4703-02-00383
R706	Variable, 1 K (Zero Adj.)	4735-01-00020
R707	680 Ohms	4703-01-00330
R708	Variable, 10 K (LSB Adj.)	4735-01-00021
R709	Variable, 10 K (CW Adj.)	4735-01-00021
R710	Variable, 100 K (RF Adj.)	4735-01-00022
R711	Variable, 10 K (Audio)	Part of R710
R712	Variable, 40 Ohms (Lamp Dim)	4735-01-00023
R713	330 K	4703-01-00362
R801	220 K	4703-01-00360
R802	8.2 K	4703-01-00343
R803	470 Ohms	4703-01-00328
S101	Band Switch includes S101A thru S101E	5110-02-00008

Item	Desoription Resistors (con't)	Hammarlund Part Number
S201	Slide Switch includes S201A and S201B	5112-01-00101
S301	Switch (AM-CW-LSB-USB)	5107-02-00009
S701	Switch (STBY-REC-NL-CAL)	5106-02-00035
S702	Switch (AVC-FAST/SLOW)	5106-02-00034
S703	Switch (OFF-ON)	Part of R710
T201	Transformer, 3.055 MHz	1824-02-00004
T202	Transformer, 3.055 MHz	1824-02-00004
T203	Transformer. 455 kHz (Interstage)	1824-02-00005
T204	Transformer, 455 kHz (Interstage)	1824-02-00005
T205	Transformer, 455 kHz (Output)	1824-02-00003
T601	Transformer, Power	5602-02-00008
T701	Transformer,Audio (Driver)	5617-02-00002
T702	Transformer. Audio (Output)	5618-02-00013
TB401	Terminal Board (VFO)	2887-02-02014
TH601	Thermal Circuit Breaker (2 Ampere)	5303-02-00001
Y101 Thru Y124	Crystal (See Section 5 for specifications)	2305-02-XXXXX
Y201	Crystal, 100 kHz	2305-01-00061
Y301	Crystal, 453.630 kHz	2303-02-00006
Y302	Crystal 456.330 kHz	2303-02-00007
ZF101	Choke, Parasitic	1806-01-00055
	MISCELLANEOUS	
1	RF PC Board & Switch Module (Completely wired)	PL9001-02-00067
2	Main Printed Circuit Board Module(Completely wired)	PL9001-03-00251
3	BFO & BAL DE MOD PC Board Module (Completely wired)	PL9001-03-00250

Item	Description Resistors (con't)	Hammarlund Part Number
4	VFO Chassis Module (Completely wired, including dial drum)	PL9001-02-00068
5	VFO Printed Circuit Board Module (Completely wired)	PL9001-03-00255
6	Slot Filter Printed Circuit Board Module (Completely wired)	PL9001-03-00258
7	Power Supply Printed Circuit Board Module (Completely wired)	PL9001-03-00257
8	CW Oscillator Bracket Module (Completely wired)	PL9001-03-00249
9	Socket, Transistor(Used for Mechanical Filters)	2130-02-00001
10	Connector. Single Pin	2115-01-00002
11	Receptacle. Single Pin	2108-02-00002
12	Filter Retaining Board	3136-02-00029
13	Fuseholder	5136-01-00011
14	Cover (For transistors on rear panel)	1439-02-00050
15	AC Cable Assembly (wired)	PL9001-03-00248
16	DC Cable Assembly (accessory)	PL9001-03- 00246
17	Instruction Manual	9001-06-00009
18	Cover Top	1439-02-00047
19	Cover. Bottom	1439-02-00048
20	Cover, Side	1439-02-00049
21	Mounting Feet	2540-01-00002
22	Mounting Feet Extensions	2540-01-00003
23	Connectors (mates with J702 thru J709)	2107-01-00001
24	Knob, 5/8" Dia x 5/16" Thk	2430-02-00115
25	Knob, 1-1/8" Dia x 1/4" Thk	2430-02-00116
26	Knob, 1-1/8" Dia x 1/4" Thk (with pointer leg)	2430-02-00117
27	Knob, With finger hole	2430-02-00118
28	Knob, Pointer Type	2430-02-00119
29	Knob, With skirt (for 1/8" Dia Shaft)	2430-02-00120
30	Knob, With skirt (for 1/4" Dia Shaft)	2430-02-00121
31	Knob, 0.700 Dia. x 0.600 Thk	2430-02-00122
32	Cover, Pilot Lamp	3926-01-00054
33	Slot Filter Shield	PL9001-03-00261

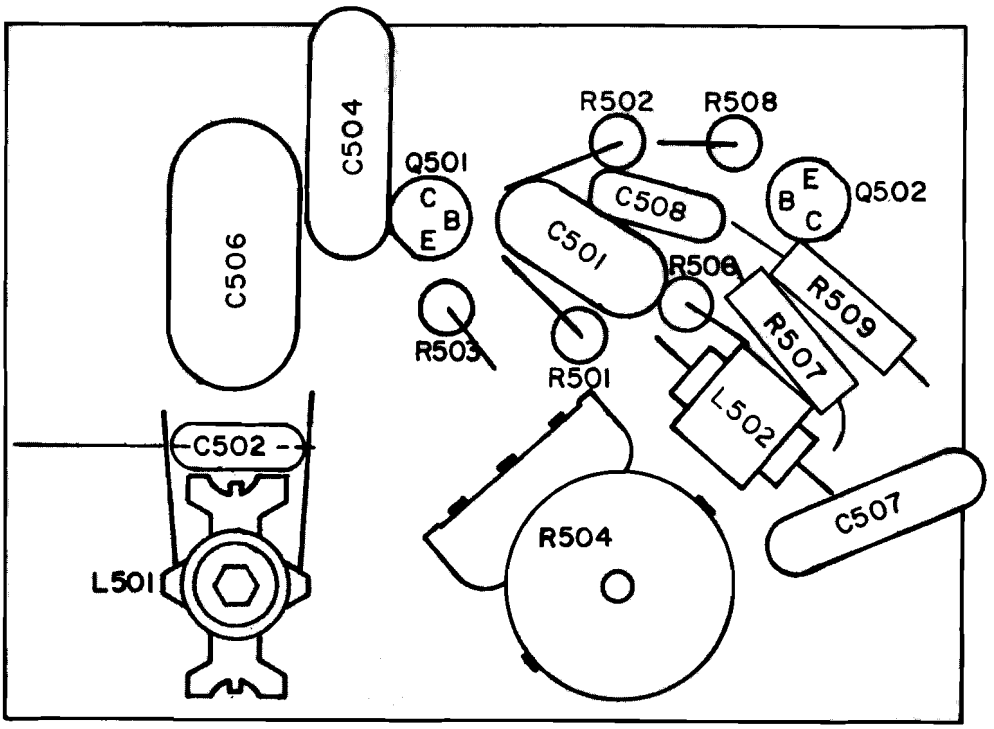

FIGURE 7-1 X-RAY VIEW, SLOT FILTER MODULE

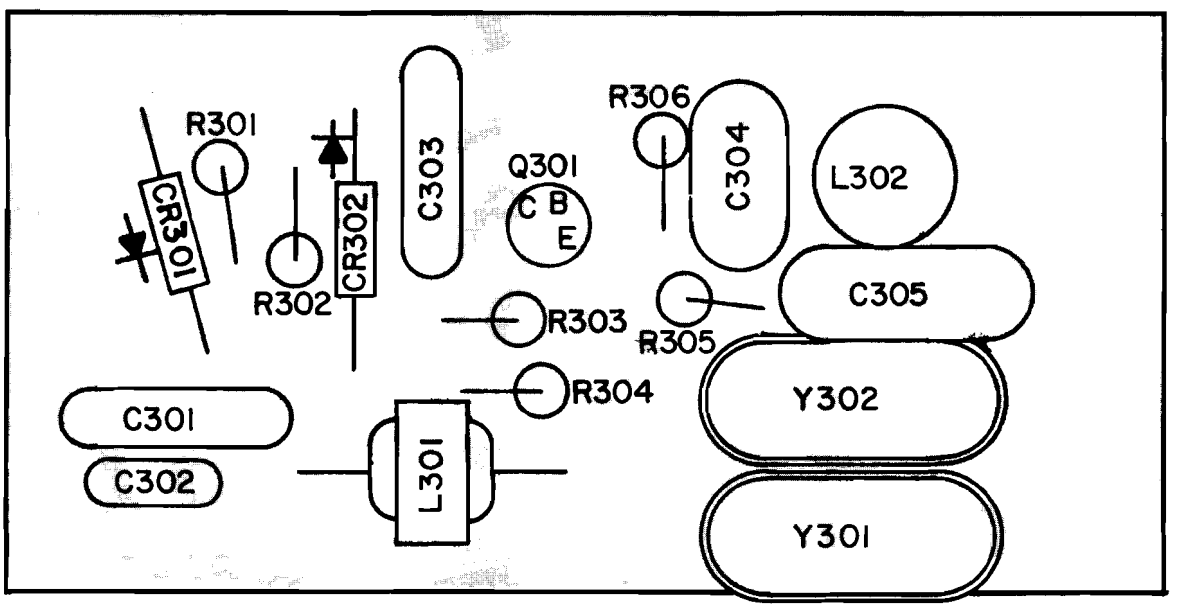

FIGURE 7-2 X-RAY VIEW, BFO MODULE

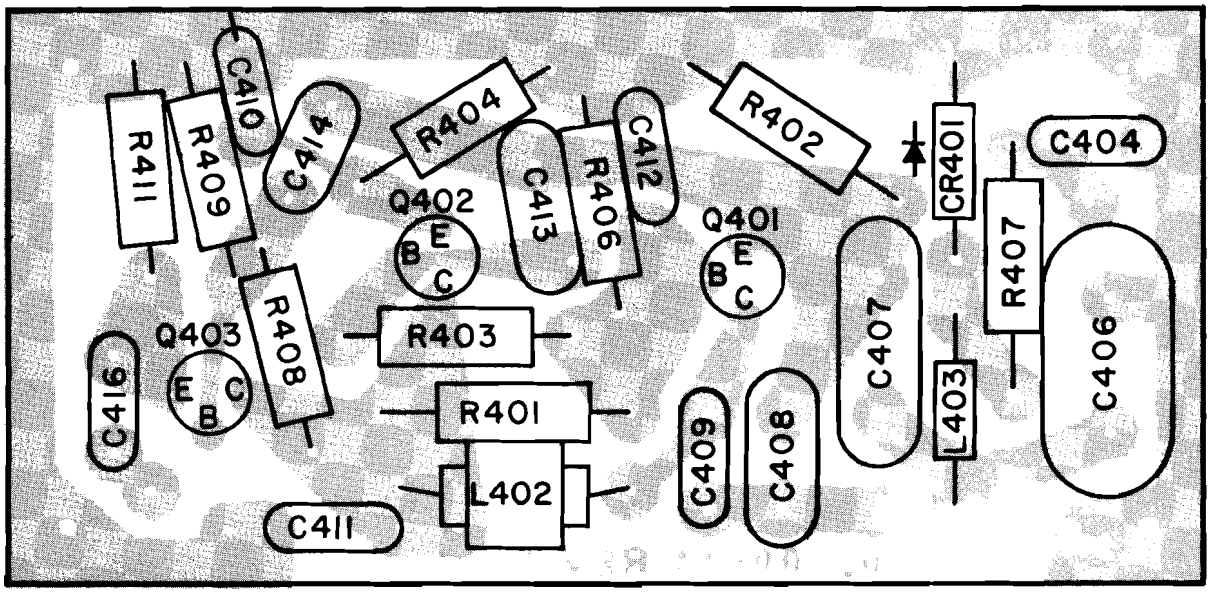

FIGURE 7-3 X-RAY VIEW, VFO MODULE

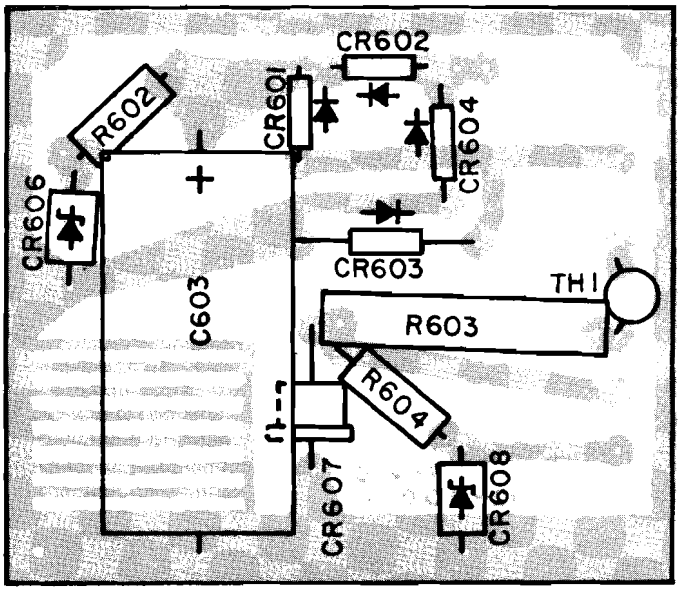

FIGURE 7-4 X-RAY VIEW, POWER SUPPLY MODULE

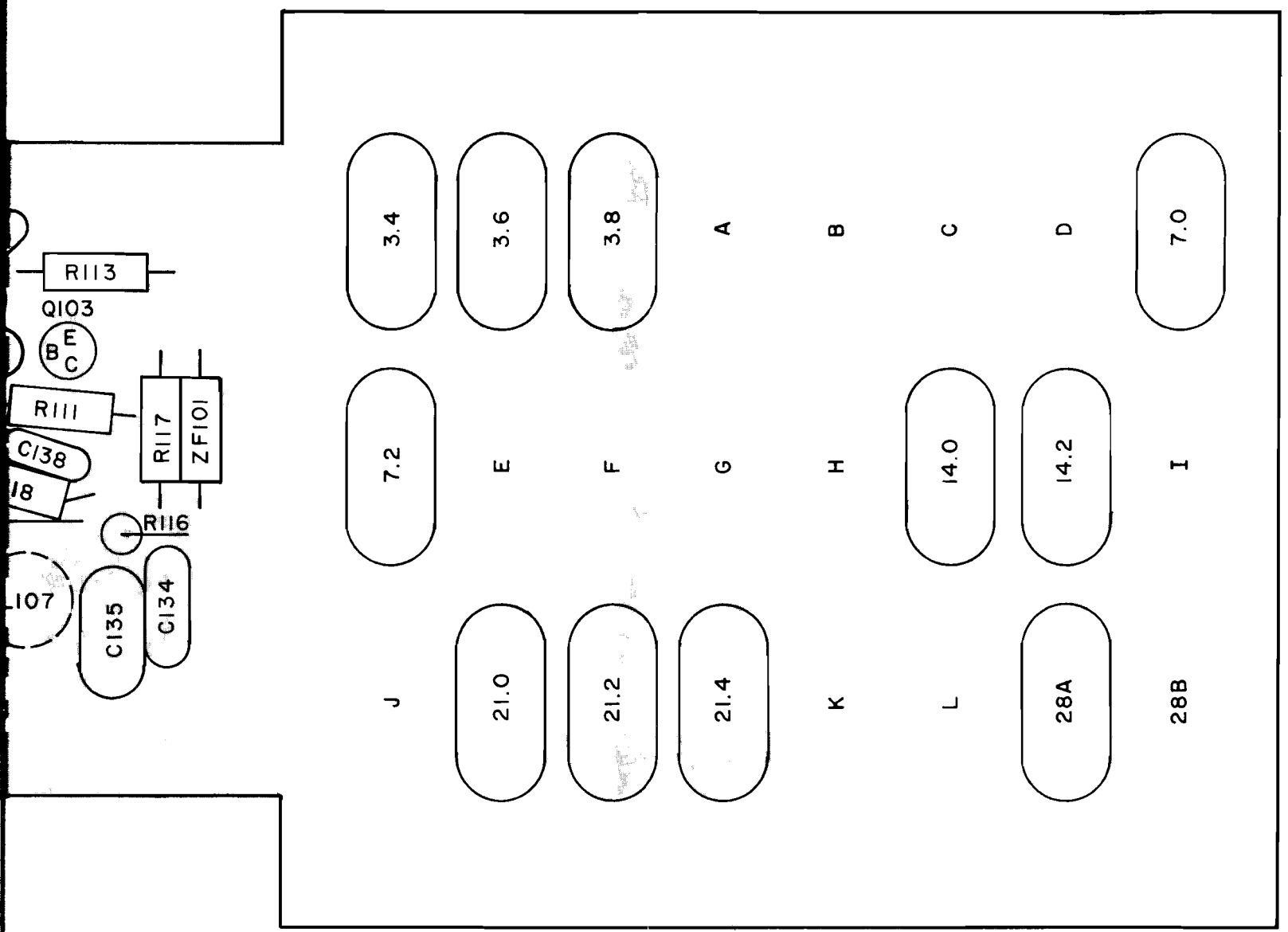

FIGURE 7-5 X-RAY VIEW, RF MODULE

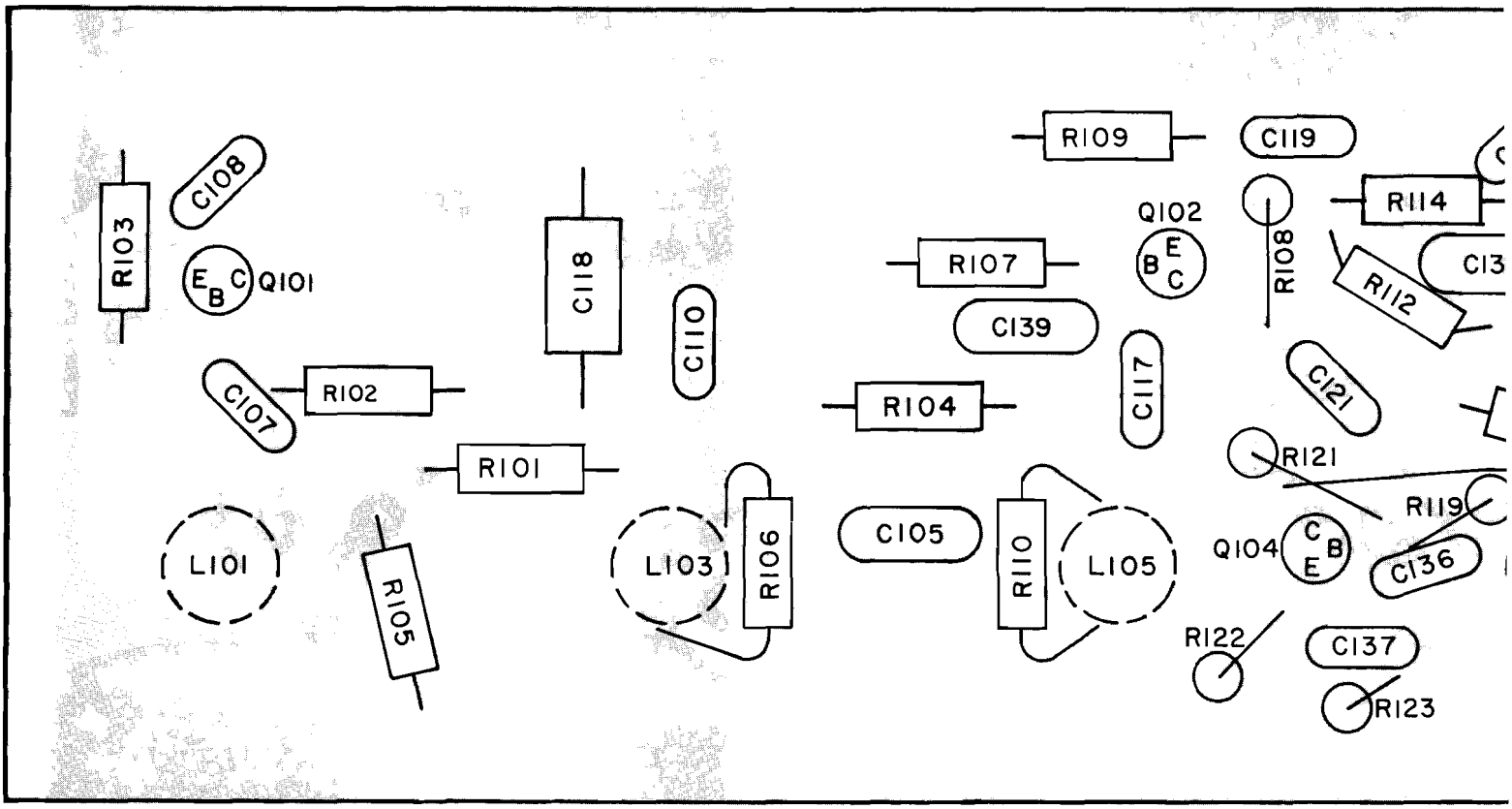
R103
C108
Q101
E B C
C107
R102
R101
L101
R105
C118
C110
L103
R106
R109
C119
Q102
B E C
R107
C139
R104
C105
R110
L105
R108
R114
R112
C117
C121
R121
R119
Q104
C B E
C136
R122
C137
R123

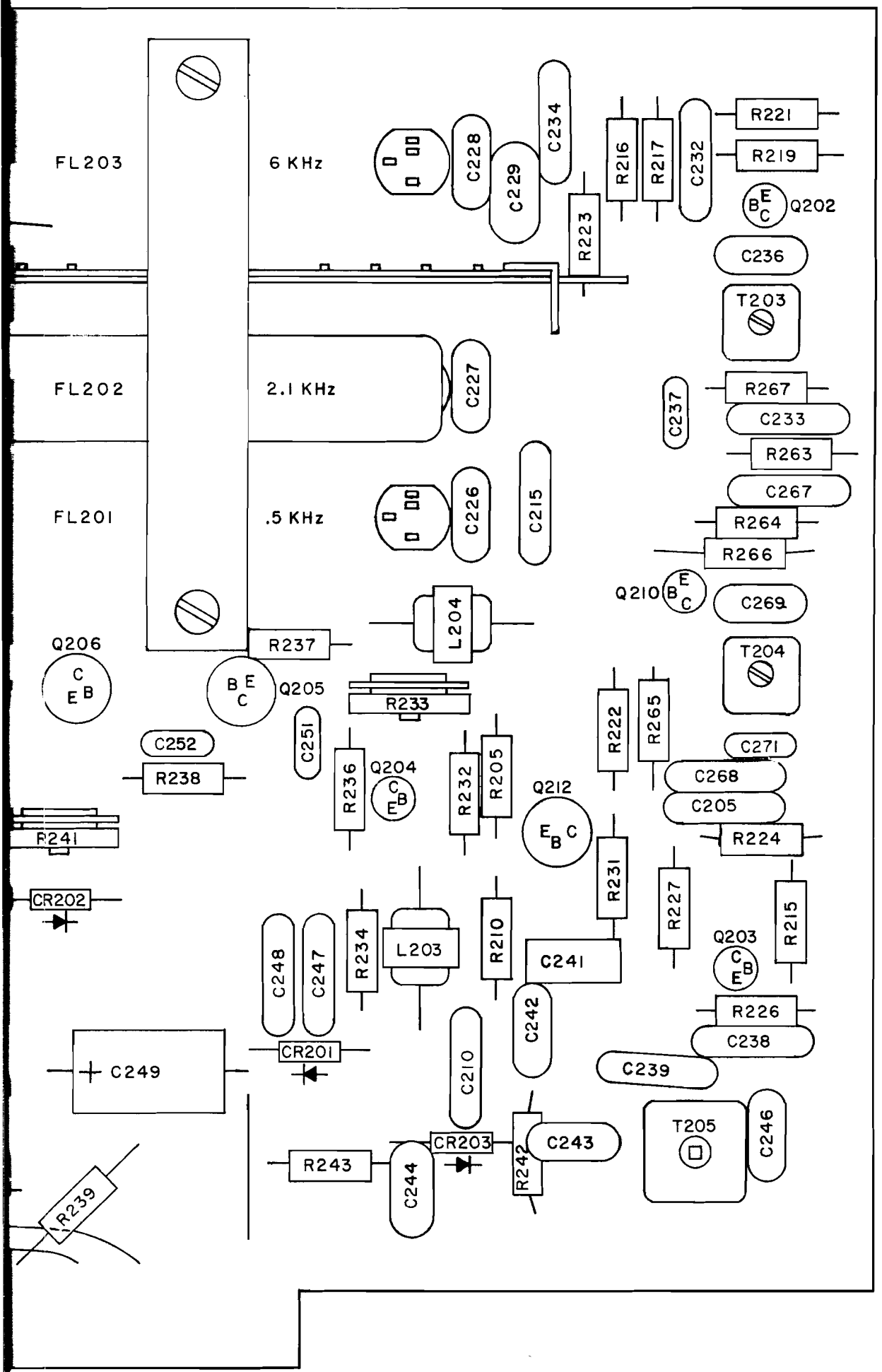
FL203
6 KHz
FL202
2.1 KHz
FL201
.5 KHz
C228
C229
C234
R223
R216
R217
C232
R221
R219
Q202
C236
T203
C227
R267
C237
C233
R263
C226
C215
C267
R264
R266
Q210
C269
L204
R237
T204
Q206
Q205
R233
R222
R265
C252
C251
C271
R238
R236
Q204
R232
R205
Q212
C268
C205
R241
R224
R231
R227
R215
CR202
C248
C247
R234
L203
R210
C241
Q203
C242
R226
C238
C249
CR201
C210
C239
T205
C246
R243
C244
CR203
R242
C243
R239

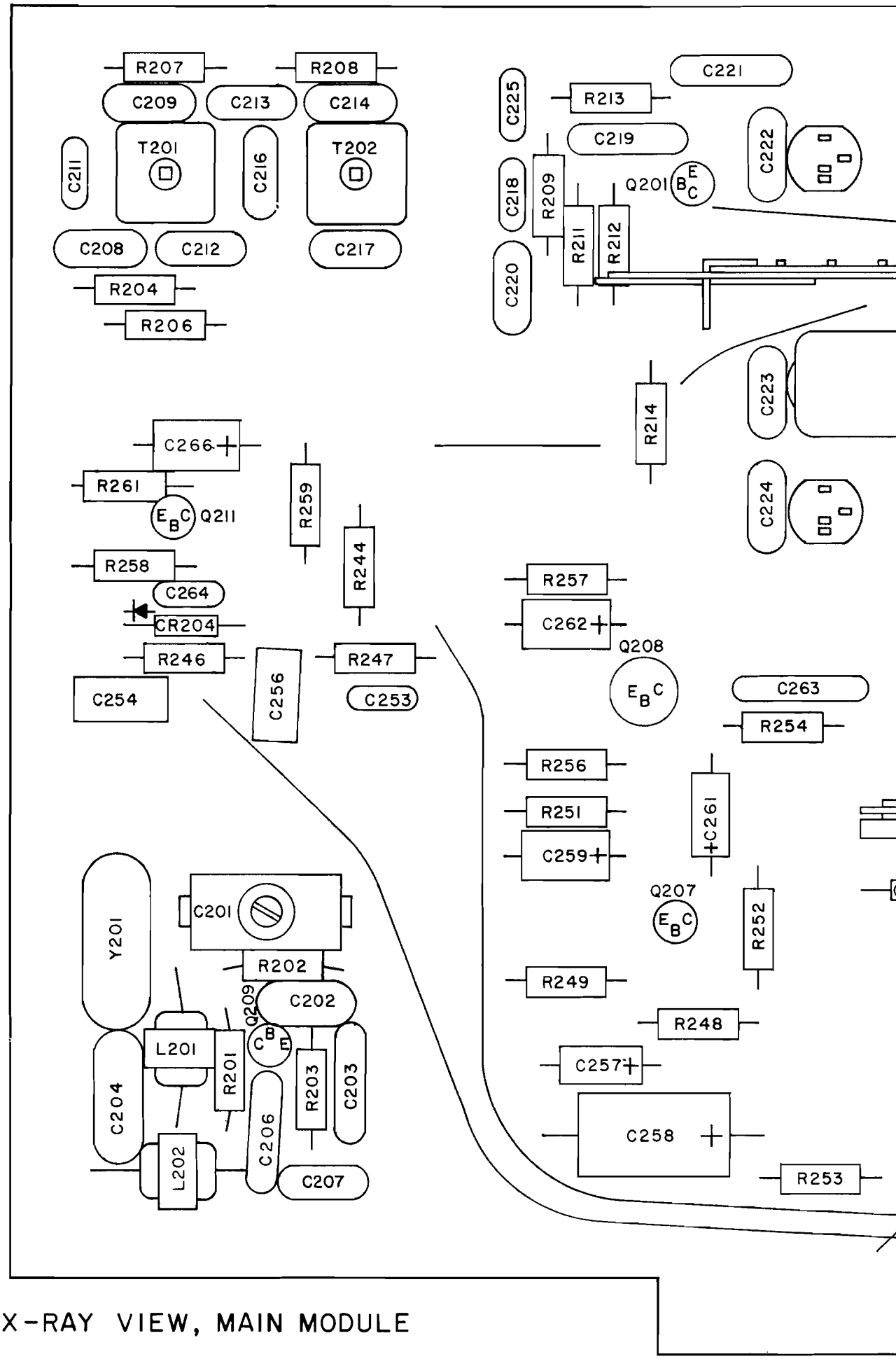

FIGURE 7-6 X-RAY VIEW, MAIN MODULE

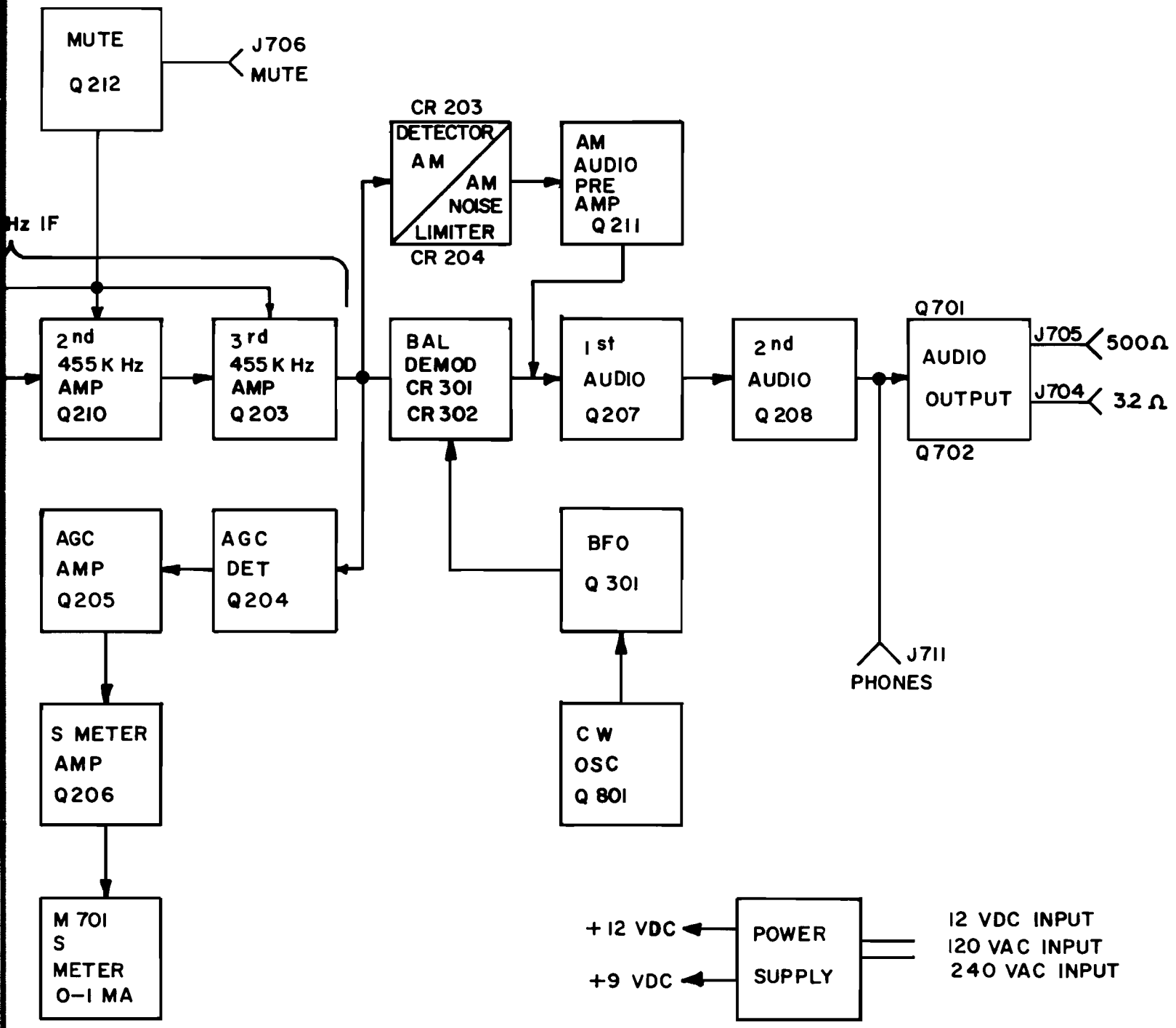

FIGURE 7-7 BLOCK DIAGRAM

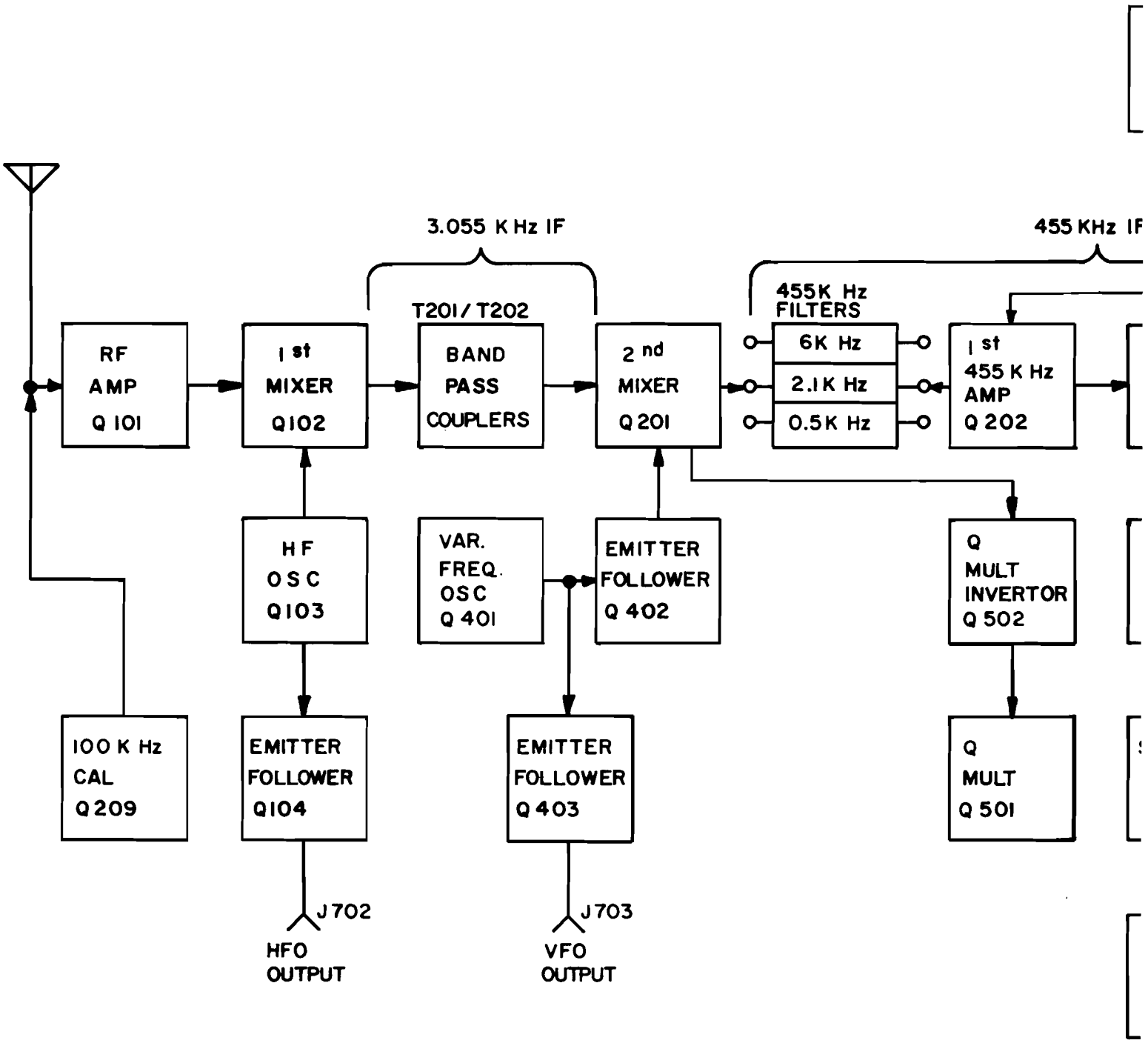
3.055 K Hz IF
455 KHz IF
T201/T202
455K Hz FILTERS
RF AMP Q 101
1 st MIXER Q102
BAND PASS COUPLERS
2 nd MIXER Q 201
6K Hz
2.1K Hz
0.5K Hz
1 st 455 K Hz AMP Q 202
HF OSC Q103
VAR. FREQ. OSC Q 401
EMITTER FOLLOWER Q 402
Q MULT INVERTOR Q 502
100 K Hz CAL Q 209
EMITTER FOLLOWER Q104
EMITTER FOLLOWER Q 403
Q MULT Q 501
J702
HFO OUTPUT
J703
VFO OUTPUT

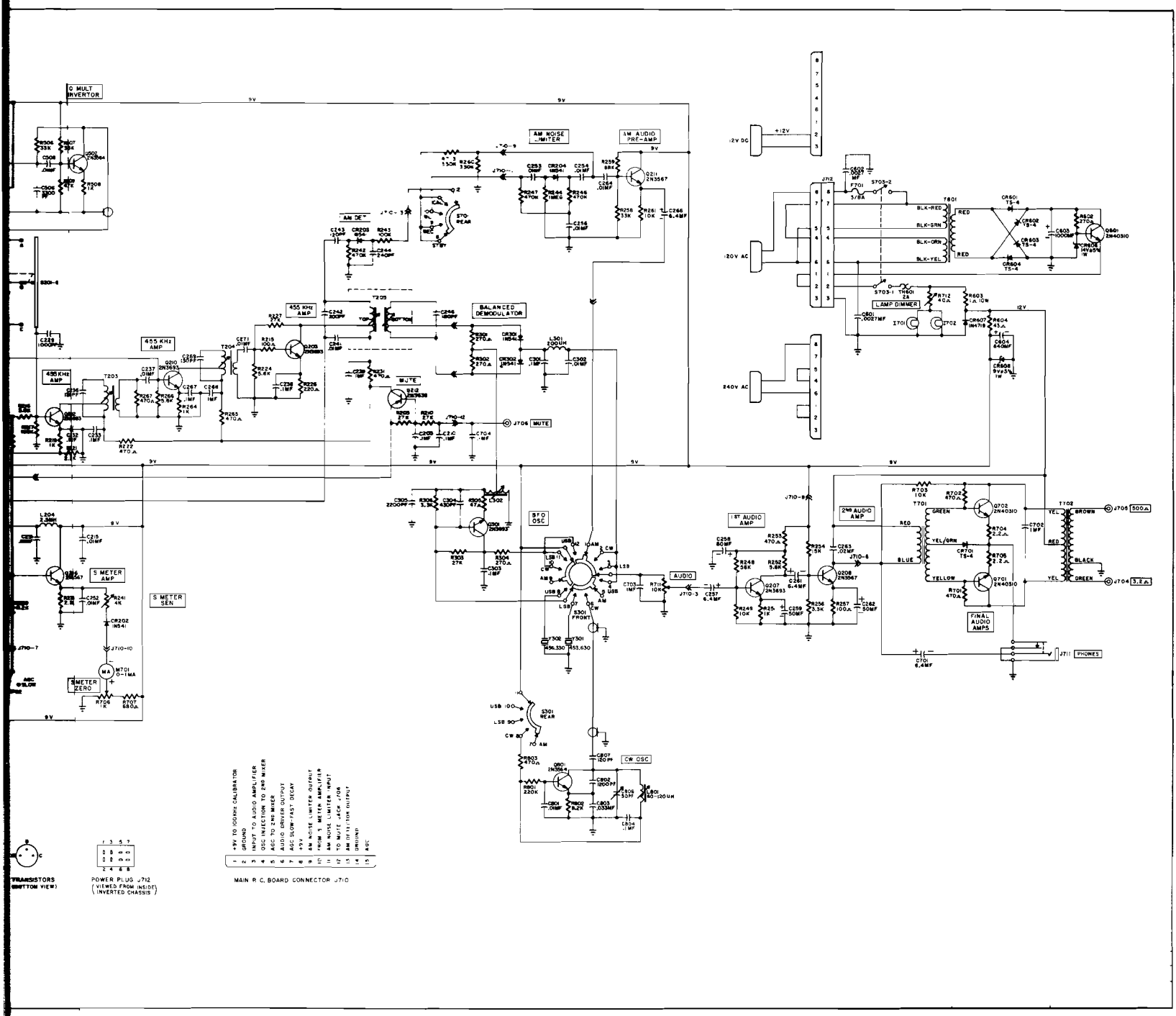

FIGURE 7-8 SCHEMATIC DIAGRAM

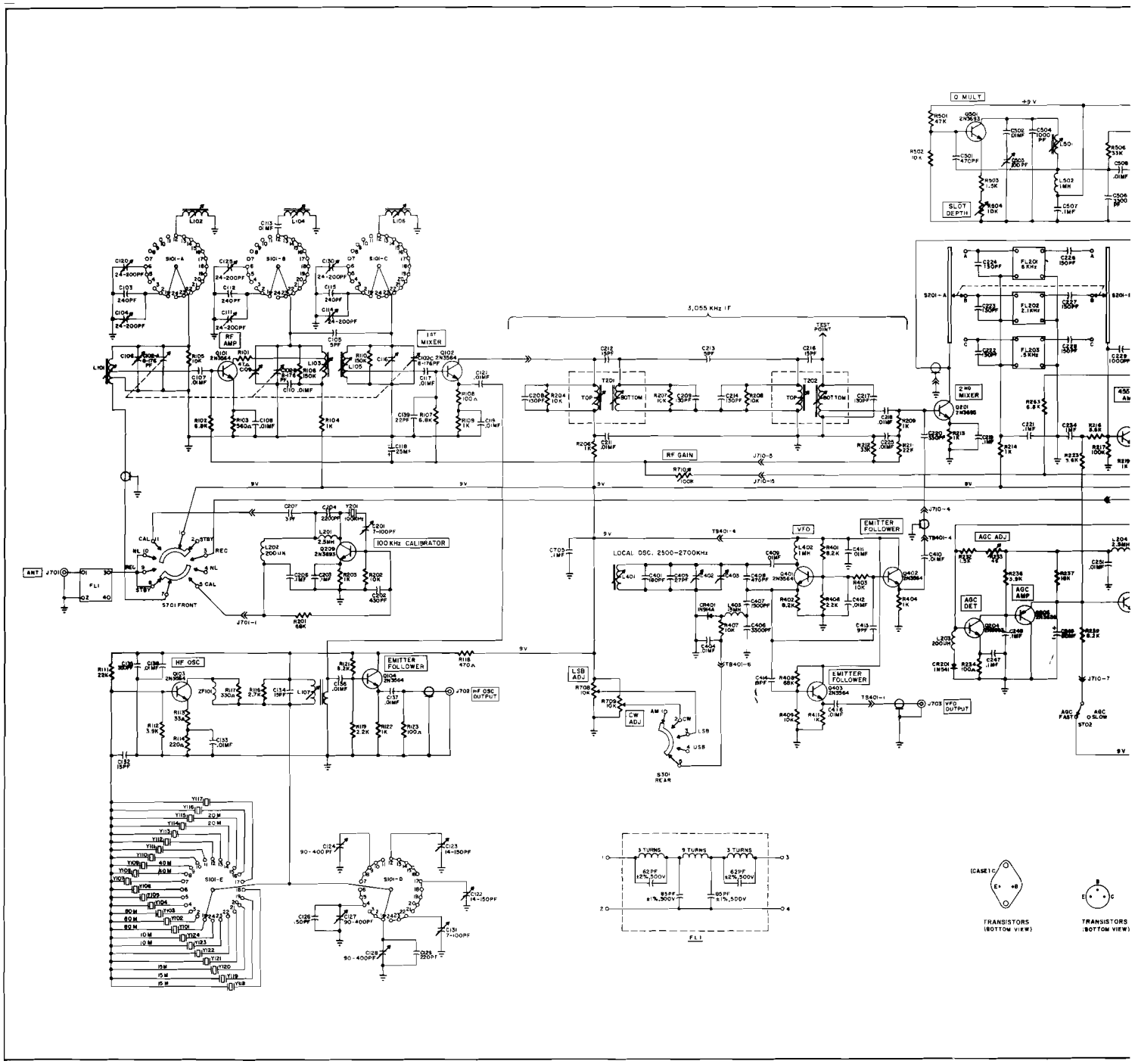
Q MULT
+9 V
SLOT DEPTH
3,055 KHz IF
TEST POINT
1ST MIXER
RF AMP
2ND MIXER
RF GAIN
100 KHz CALIBRATOR
LOCAL OSC. 2500-2700KHz
VFO
EMITTER FOLLOWER
AGC ADJ
AGC DET
AGC AMP
HF OSC
HF OSC OUTPUT
LSB ADJ
CW ADJ
VFO OUTPUT
AGC FAST
AGC SLOW
ANT
S701 FRONT
S301 REAR
FL1
TRANSISTORS (BOTTOM VIEW)
TRANSISTORS (BOTTOM VIEW)

HAMMARLUND MANUFACTURING COMPANY
Standard Warranty

The Hammarlund Manufacturing Company, warrants this equipment to be free from defects in workmanship and materials under normal and proper use and service for the uses and purposes for which it is designed, and agrees to repair or replace, without charge, all parts thereof showing such defects which are returned for inspection to the Company's factory, transportation prepaid, within a period of 90 days from date of delivery, provided such inspection discloses to the satisfaction of the Company that the defects are as claimed, and provided also, that the equipment has not been altered, repaired, subjected to misuse, negligence or accident, or damaged by lightning, excessive current or otherwise, or had its serial number or any part thereof altered, defaced, or removed. Tubes shall be deemed to be covered by the manufacturer's standard warranty applicable thereto, and such items shall be and are hereby excluded from the provisions of this warranty. Pilot lamps and fuses are not guaranteed for length of service.

Except as herein specifically provided, no warranty, express or implied, other than that of title, shall apply to any equipment sold hereunder. In no event shall the Company be liable for damages by reason of the failure of the equipment to function properly or for any consequential damages.

This Warranty is valid for the original owner of the equipment, and is contingent upon receipt of the Warranty Registration Card by the Company. No equipment shall be returned to the factory for repairs under warranty unless written authorization is obtained by the Company, and the equipment is shipped prepaid by the owner. The Company maintains Authorized Service Stations, names and locations of which will be sent upon request of the owner.

Hammarlund Manufacturing Company
A Giannini Scientific Co.
73-88 Hammarlund Drive, Mars Hill, N. C.
Export Department: 13 East 40th Street, New York 16, N. Y.

The policy of the Hammarlund Manufacturing Company, is one of continued improvement in design and manufacture wherever and whenever possible, to provide the highest attainable quality and performance. Hence, specifications, finishes, etc. are subject to change without notice and without assumption by Hammarlund of any obligation or responsibility to provide such features as may be changed, added or dropped from previous production runs of this equipment.

Hammarlund Manufacturing Company
A Giannini Scientific Co.
73-88 Hammarlund Drive, Mars Hill, N. C.
Export Department: 13 East 40th Street, New York 16, N. Y.

DO NOT MAKE ANY RETURNS WITHOUT AUTHORIZATION FROM THE FACTORY. ALL AUTHORIZED RETURNS SHOULD BE SHIPPED TO HAMMARLUND MANUFACTURING CO., ATTN. CUSTOMER SERVICE, MARS HILL, NORTH CAROLINA.

ESTABLISHED 1910