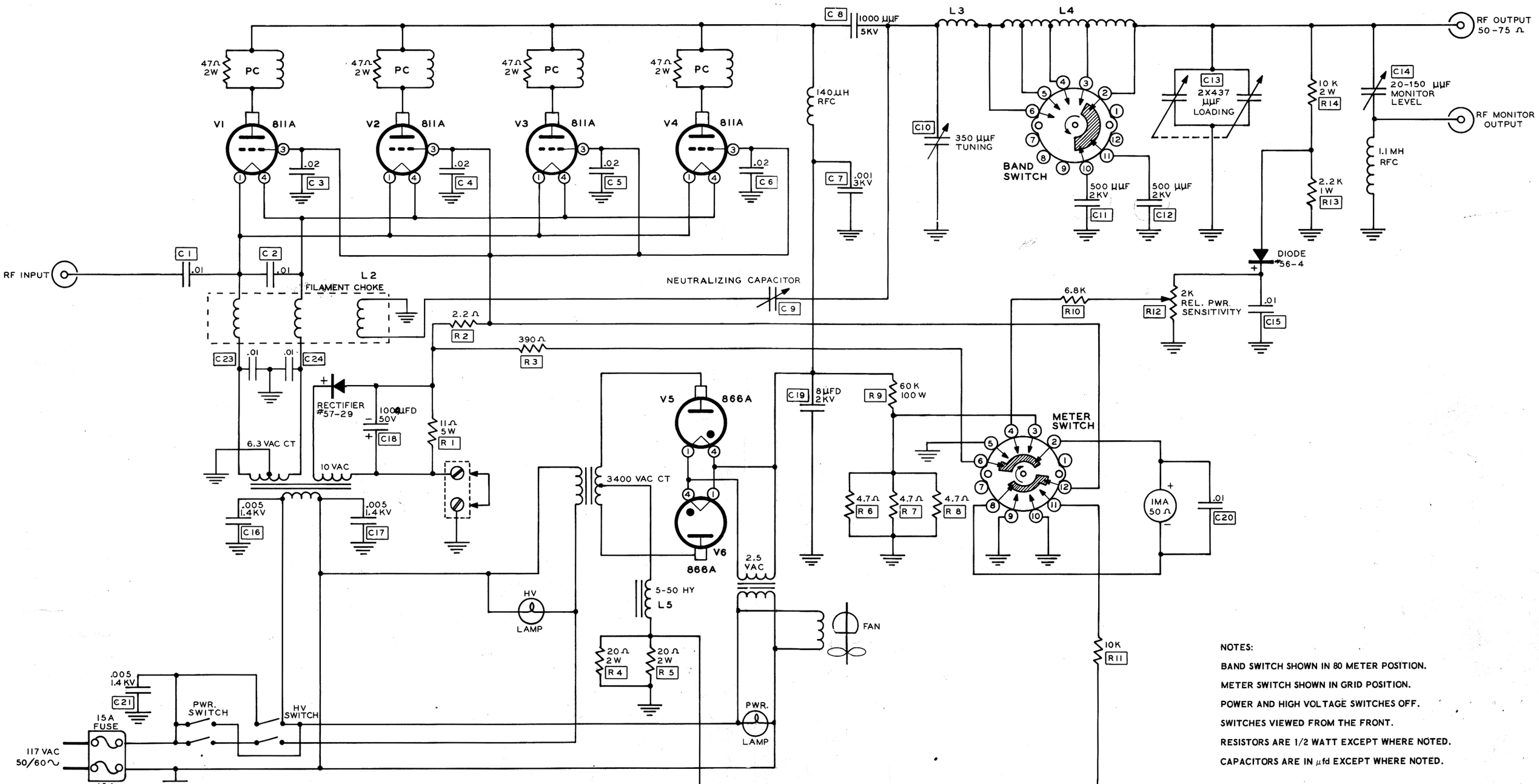

NOTES:

BAND SWITCH SHOWN IN 80 METER POSITION.

METER SWITCH SHOWN IN GRID POSITION.

POWER AND HIGH VOLTAGE SWITCHES OFF.

SWITCHES VIEWED FROM THE FRONT.

RESISTORS ARE 1/2 WATT EXCEPT WHERE NOTED.

CAPACITORS ARE IN μfd EXCEPT WHERE NOTED.

Copyright 2014 Don Peterson, d8apro.com

HEATHKIT by DAYSTROM

KILOWATT LINEAR AMPLIFIER

MODEL HA-10

595-402 1-8-61