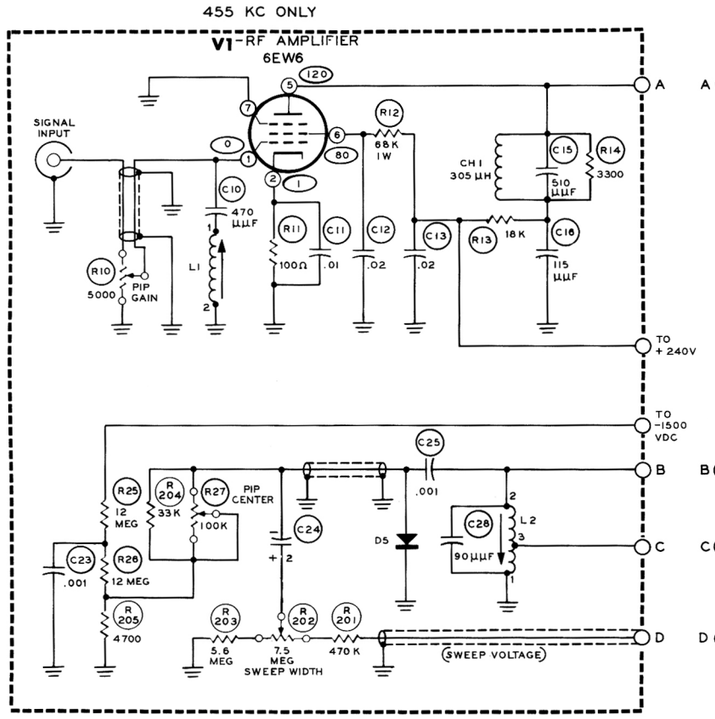

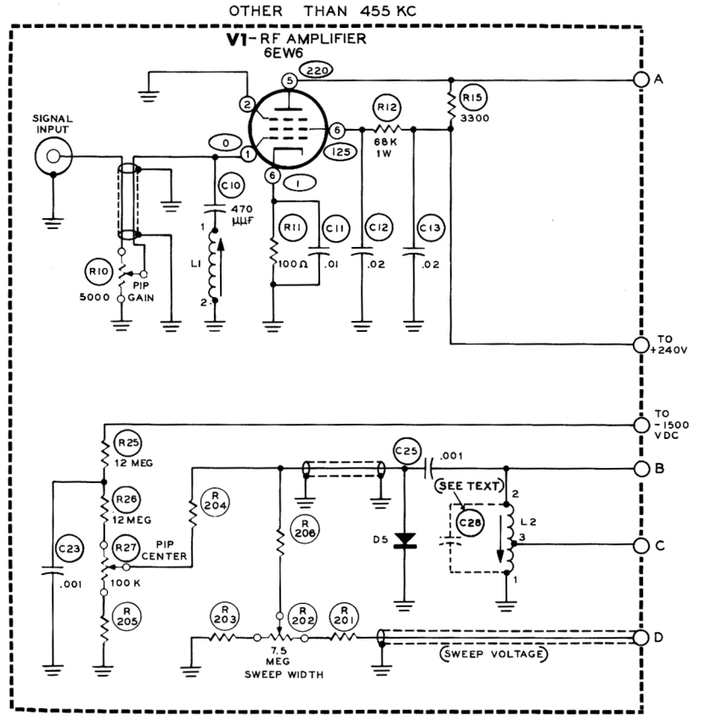

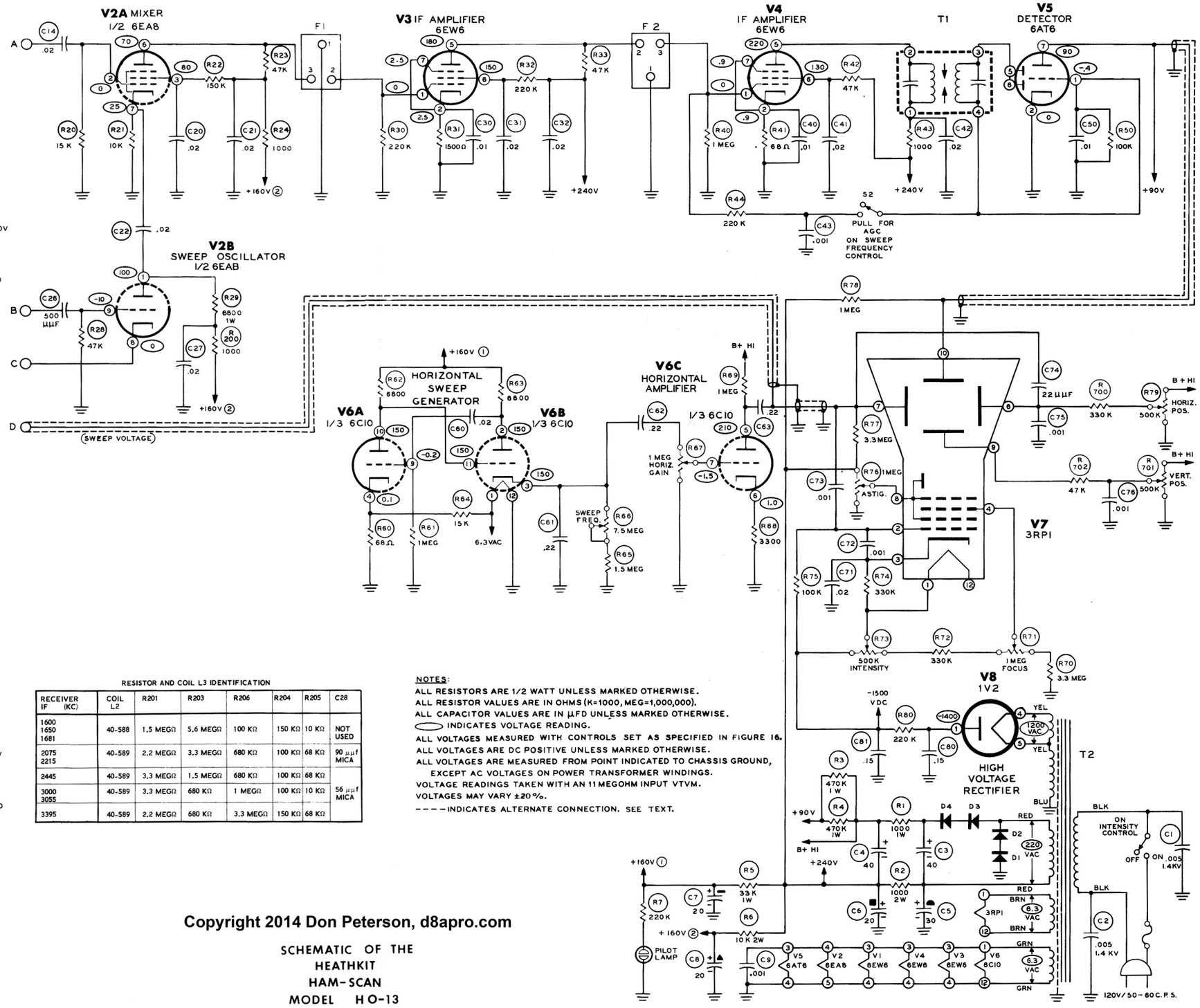

RESISTOR AND COIL L3 IDENTIFICATION

RECEIVER IF (KC)	COIL L2	R201	R203	R206	R204	R205	C28
1600 1650 1681	40-588	1.5 MEGΩ	5.6 MEGΩ	100 KΩ	150 KΩ	10 KΩ	NOT USED
2075 2215	40-589	2.2 MEGΩ	3.3 MEGΩ	680 KΩ	100 KΩ	68 KΩ	90 μμf MICA
2445	40-589	3.3 MEGΩ	1.5 MEGΩ	680 KΩ	100 KΩ	68 KΩ	56 μμf MICA
3000 3055	40-589	3.3 MEGΩ	680 KΩ	1 MEGΩ	100 KΩ	10 KΩ	
3395	40-589	2.2 MEGΩ	680 KΩ	3.3 MEGΩ	150 KΩ	68 KΩ	

NOTES:
ALL RESISTORS ARE 1/2 WATT UNLESS MARKED OTHERWISE.
ALL RESISTOR VALUES ARE IN OHMS (K=1000, MEG=1,000,000).
ALL CAPACITOR VALUES ARE IN μFD UNLESS MARKED OTHERWISE.
( ) INDICATES VOLTAGE READING.
ALL VOLTAGES MEASURED WITH CONTROLS SET AS SPECIFIED IN FIGURE 16.
ALL VOLTAGES ARE DC POSITIVE UNLESS MARKED OTHERWISE.
ALL VOLTAGES ARE MEASURED FROM POINT INDICATED TO CHASSIS GROUND, EXCEPT AC VOLTAGES ON POWER TRANSFORMER WINDINGS.
VOLTAGE READINGS TAKEN WITH AN 11 MEGOHM INPUT VTVM.
VOLTAGES MAY VARY ±20%.
- - - - INDICATES ALTERNATE CONNECTION. SEE TEXT.

Copyright 2014 Don Peterson, d8apro.com

SCHEMATIC OF THE
HEATHKIT
HAM-SCAN
MODEL HO-13

595-681 3-20-64