OPERATION AND MAINTENANCE

SWAN CYGNET MODEL 270

SWAN
ELECTRONICS
Oceanside, California
A Subsidiary of Cubic Corporation

OPERATION and MAINTENANCE
SWAN Cygnet MODEL 270

INTRODUCTION

The Swan Cygnet Model 270 Single Sideband Transceiver together with its accessories and optional equipment, is designed to be used in either CW or SSB modes on all portions of the 80-, 40-, 20-, 15-, and 10 meter amateur radio bands. MARS frequencies may also be covered by using the Model 510X oscillator accessory.

The Model 270 generates a single sideband signal by means of a crystal lattice filter, and the transceive operation automatically tunes the transmitter to the received frequency. Provisions are included in the transceiver for operation on either upper or lower sideband.

Basic circuitry of the single conversion design has been proven in several thousand of the popular Swan transceivers. Mechanical, electrical, and thermal stability is exceptionally high. All oscillators are temperature compensated and voltage regulated. Push-to-talk operation is standard, with provision for plugging in the Model VX-2 accessory Vox unit for automatic voice control.

The basic transceiver provides coverage of all portions of the 80 through 10-meter amateur bands In addition to this, the amplifier circuits will tune to most MARS frequencies near the 80-, 40-, and 20-meter bands. By using the Model 510X crystal oscillator accessory, MARS operation is thus possible.

With the built-in dual power supply, operation may be fixed, portable, or mobile. Power input on all bands exceeds 260 watts, PEP, on single sideband and 180 watts on CW. The Model 270 includes automatic gain control, (AGC), automatic level control, (ALC), and grid block keying.

REVISION 1 MARCH 1970

SPECIFICATIONS

FREQUENCY RANGES

80 Meters	3.5 to 4 mc.
40 Meters	7.0 to 7.300 mc.
20 Meters	14.0 to 14.350 mc.
15 Meters	21.0 to 21.450 mc.
10 Meters	28.0 to 29.7 mc.

POWER INPUT

Single Sideband, Suppressed Carrier:
260 watts, PEP, minimum on all bands.
CW: 180 watts, dc input on all bands.

AM: (Single Sideband with Carrier)
65 watts dc input on all bands.

DISTORTION

Distortion products down approx. 30 db.

UNWANTED SIDEBAND SUPPRESSION

Unwanted sideband down more than 50 db.

CARRIER SUPPRESSION

Carrier suppression greater than 50 db.

RECEIVER SENSITIVITY

Less than 0.5 microvolt at 50 ohms impedance for signal-plus-noise to noise ratio of 10 db.

AUDIO OUTPUT AND RESPONSE

Audio output, 3 watts to 3.2 ohm load. Response essentially flat from 300 to 3000 cps in both receive and transmit.

TRANSMITTER OUTPUT

Wide-range Pi-network output matches resistive loads from 50 to 75 ohms.

METERING

Power amplifier cathode current 0-400 ma on transmit, S-Meter 0-70 db over S9 on receive.

FRONT PANEL CONTROLS

AF Gain, RF Gain, Sideband Selector, CAL-REC-TUNE/CW, Mic. Gain, Bandswitch, Carrier Balance, PA Plate Tune, Driver Tune, PA Load, Dial set, Meter Switch.

REAR PANEL CONTROLS AND CONNECTIONS

Bias potentiometer, CW key jack, Jones plug power connector, Antenna jack, S-Meter zero, Auxiliary relay switching, Outboard VFO connector, Headphone Jack. The Vox Connector is located on the side of the chassis.

VACUUM TUBE COMPLEMENT

V1	12AU6 VFO Amplifier
V2	12BE6 Transmitter Mixer
V3	6GK6 Driver
V4	6LQ6 Power Amplifier
V5	6BZ6 Receiver RF Amplifier
V6	12BE6 Receiver Mixer
V7	12BA6 First IF Amplifier
V8	12BA6 Second IF Amplifier
V9	12AX7 Product Detector/Receive Audio
V10	6AV6 AGC Amplifier/Rectifier
V11	6AQ5 AF Output
V12	12BA6 100 KC Calibrator
V13	6JH8 Balanced Modulator
V14	12AX7 Microphone Amplifier

TRANSISTOR COMPLEMENT

Q1	2N706 Oscillator
Q2	2N5130 Buffer
Q3	2N706 Carrier Oscillator
Q4	2N1522 P. S. Switching
Q5	2N1522 P. S. Switching

POWER REQUIREMENTS

12-14 volts dc
8 amps receive, 12 amps ave. w/voice mod.
25 amps max. in TUNE

117 Vac., 60 cps, at 4 amps
(208-220-240 volt, 50-60 cps, at 2.5 amps max., export model)

DIMENSIONS

Height	5-1/2 in.
Width	13 in.
Depth	11 in.

WEIGHT

Weight	24 lbs.

CIRCUIT THEORY

GENERAL DISCUSSION

The Swan 270 transceiver provides single sideband, suppressed carrier transceive operation, and generates the single sideband signal by means of a crystal lattice filter. To permit a logical discussion of this mode of operation certain definitions are necessary. In a normal AM signal, (double sideband with carrier), a radio frequency signal is modulated with an audio frequency signal. This is considered by many to be merely a case of varying the amplitude of the carrier at an audio rate. In fact, however, there are actually sideband frequencies generated, which are the results of mixing the RF and the AF signals. These sidebands are the sum of, and the difference between the two heterodyned signals. In the detection of this conventional AM signal, the two sidebands are mixed with the carrier to recover and reproduce the audio intelligence. This is an inefficient means of transmission, because only 25 percent of the transmitted power is used to transmit intelligence. There are other attendant drawbacks, also. The bandwidth of AM voice transmission is approximately 6 kc, while the actual demodulated audio is only approximately 3 kc. The result is inefficient use of the frequency band, and over half of the allotted band is unusable due to heterodynes, interference, and congestion.

In the single sideband, suppressed carrier mode of transmission, only one of the sideband signals is transmitted. The other sideband and the carrier are suppressed to negligible level. In addition to increasing the transmission efficiency by a factor of four, single sideband effectively doubles the number of stations or channels which can be used in a given band of frequencies.

It should be remembered that in the single sideband, suppressed carrier mode of transmitting, the unwanted sideband and carrier are only suppressed, not entirely eliminated. Thus, with a transmitted signal from a transmitter with 50 db sideband suppression, the other or unwanted sideband will be present, and will be transmitted, but its level will be 50 db below the wanted sideband. When this signal is received at a level of 20 db over S9, the unwanted sideband will be present at a level of approximately S5. The same is true of carrier suppression. With carrier suppression of 60 db, and a signal level of 20 db over S9, carrier will be present at a level of approximately S3 to S4.

For the following discussion refer to the schematic diagram, and to Figures 1, 2, and 3.

SIGNAL GENERATION

When the push-to-talk switch on the microphone is pressed, the transmitter portion of the transceiver is activated, and it generates a single sideband, suppressed carrier signal in the following manner. Carrier is generated by Q3 Carrier Oscillator, which is a Pierce oscillator with the crystal operating in parallel resonance. This stage operates in both the transmit and receive modes. When transmitting, the RF output of the oscillator is injected into the control grid of the Balanced Modulator, V13. This balanced modulator is a beam deflection tube, and operates similar to a cathode ray tube in that the electron beam from the cathode is deflected to one output plate or the other by the charge appearing on the deflection plates. The carrier signal fed to the control grid of the balanced modulator appears on both plates of the output. The two plates are connected to Transformer T1301 in push-pull, so the carrier signal cancels itself out in T1301. The deflection plate dc voltages are adjusted by means of the carrier balance control so that the RF being fed to the output plates will cancel out, and the output from T1301 will be zero. Audio signals from the Microphone Amplifier, V14, are applied as a modulating voltage to one deflection plate, and the two sidebands resulting from the sum and difference frequencies of the audio and carrier signals appear in the output of transformer T1301. Carrier suppression is approximately 60 db.

The double sideband, suppressed carrier signal is then coupled from the secondary winding of T1301 to the crystal filter, which suppresses the lower sideband, and permits only the upper sideband to be fed to the First IF Amplifier V7. The carrier frequency is generated at approximately 5500. 0 kc, normal sideband. With the opposite sideband crystal, the carrier crystal frequency will be 5503. 3 kc, and this positions the double sideband signal on the other side of the filter response curve, attenuating the upper sideband by at least 50 db. In the single conversion mixing process, these sidebands become inverted on 80 and 40 meters. Thus the Swan 270 normally operates on lower sideband on 80 and 40, while on 20, 15, and 10 meters normal operation is on upper sideband.

Q1, the VFO 2N706 Oscillator, operates in the common base configuration as a Colpitts oscillator. Q2, the buffer is used for isolation. The extremely good regulation achieved through using the Zener diode regulator D1713 across the bias supply voltage, also contributes to the stability.

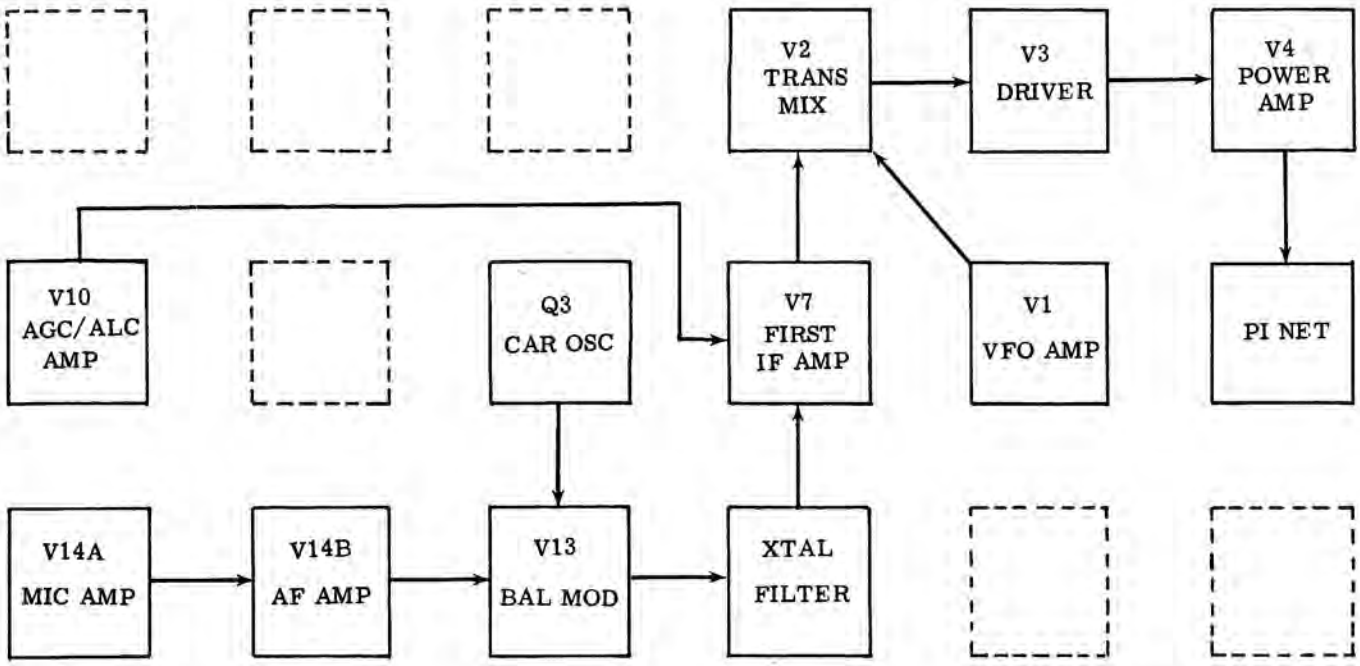

FIGURE 1. BLOCK DIAGRAM, TRANSMIT MODE

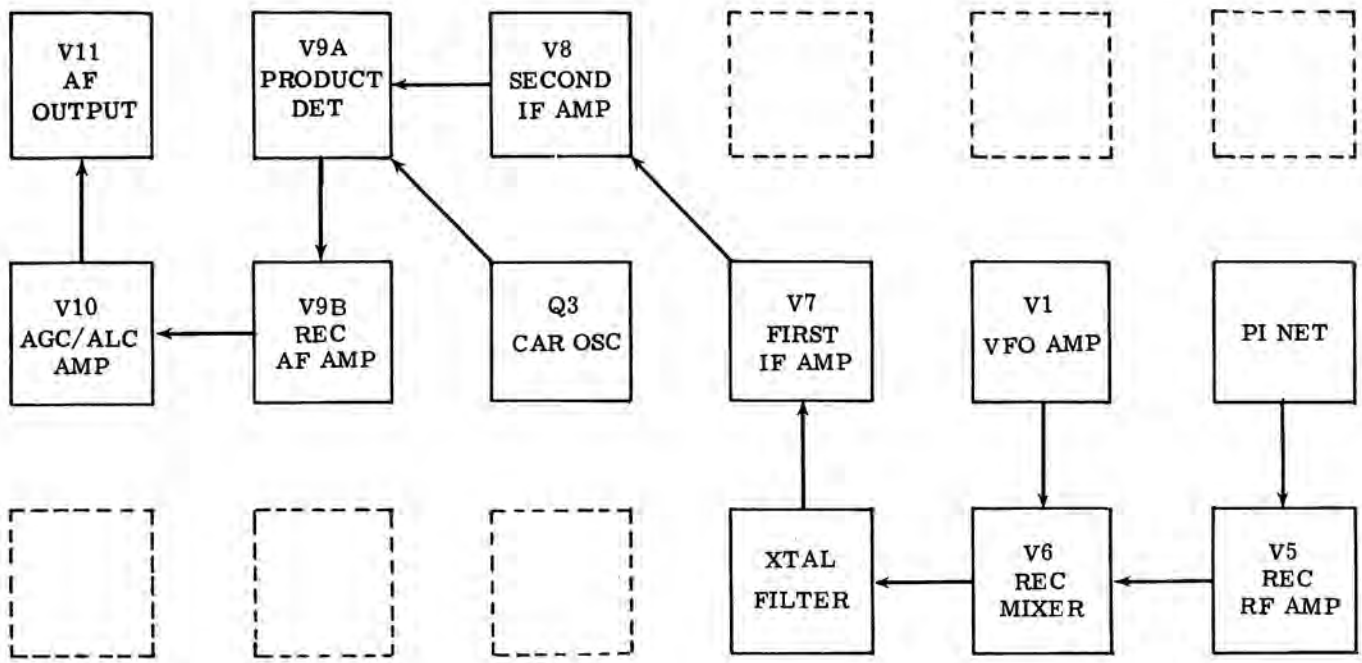

FIGURE 2. BLOCK DIAGRAM, RECEIVE MODE

Bandswitching is accomplished by changing the tank circuit coil. The VFO in the Model 270 exhibits extremely good stability after the initial warm-up period. Drift from a cold start will be less than 1 kc for the first hour on 80, 40-, and 20-meter bands, and less than 2 kc on 10 and 15 meters. After the initial warm-up period, drift will be negligible.

The single sideband, suppressed carrier signal from the first IF Amplifier is fed to the Transmitter Mixer, V2, where it is heterodyned with the VFO signal. The resultant signal at the desired transmit frequency is amplified by the Driver, V3, and the Power Amplifier, V4. The signal from the VFO Amplifier is initiated in the transistorized VFO/Buffer circuit Q1 and Q2. The signal from the VFO is routed to the VFO Amplifier, and on 40 and 80 meters, is subtractively mixed with the single sideband signal from the IF Amplifier, to result in LSB operation. On 20, 15, and 10 meters, the frequencies are additively mixed, resulting in output on the upper sideband.

When in TRANSMIT, the gain of the First IF Amplifier is controlled through the Automatic Level Control network (using the AGC Amplifier V10) to control the gain of the stage in response to the average input power to the Power Amplifier. This ALC system will compensate for any extremely strong input signals, but does not completely eliminate the necessity of proper adjustment of the Mic. Gain Control. This feature will help prevent the transmitter from flat topping and spurious emissions, but considerable distortion may occur if the Mic. Gain Control is not properly adjusted. Refer to Operating Instructions.

TUNE AND CW OPERATION

Normally, the frequency of the carrier oscillator is approximately 300 cps outside the 6 db passband of the crystal lattice filter. In TUNE position, the frequency of the carrier oscillator is moved approximately 800 cps to place it well within the passband of the crystal lattice filter. A similar procedure is followed for CW to allow full carrier output during CW operation.

RECEIVE

In RECEIVE position, or at any time when the transmitter is not in TRANSMIT, all circuits used in transmitting are disabled through the relay controlled circuits, K1. The relay is energized for transmitting and de-energized for receiving. One contact, when de-energized, allows signals from the transmitting tank circuit and antenna to be fed to the Receiver RF Amplifier, V5, where they are amplified and then fed to the control grid of the Receiver Mixer, V6. The local oscillator signal from the VFO Amplifier is now used to heterodyne the received signal to the IF frequency. All IF amplification is accomplished at this frequency, nominally 5500.0 kc, through V7 and V8 IF amplifiers. In the Product Detector V9A, the IF signal is heterodyned with the carrier frequency generated by Carrier Oscillator, Q3. The resultant audio is then amplified by V9B, which then couples to V10, the AGC amplifier, and V11, the output audio stage.

FREQUENCY CALIBRATION

Frequency calibration of the Model 270 is in 5 kc increments on 80-, 40-, 20-, and 15-meters, and in 20 kc increments on 10 meters. Dial accuracy and tracking are very good on the 270, but caution must always be observed when operating near band edges. Measuring the frequency with the 100 kc calibrator when working near band edges is recommended.

DIAL SET

A dial-set control has been provided so that dial adjustment can be made at any 100 kc point of the dial. With calibrator on, set the dial to any 100 kc point closest to the frequency you wish to work. Now adjust dial-set control to zero-beat the VFO with the 100 kc Calibrator. This provides greater accuracy of dial readout.

CAUTION

CARE MUST BE EXERCISED WHEN TUNING FOR THE 100 KC HARMONICS OF THE CALIBRATOR. SEVERAL SPURIOUS IMAGE SIGNALS MAY BE HEARD, ALTHOUGH THEY WILL BE DEFINITELY WEAKER THAN THE CORRECT HARMONICS.

TRANSMIT AND RECEIVE SWITCHING

Transmit and receive switching is performed by relay K1. In TRANSMIT position, only those tubes that operate in the transmit mode are operative, all others being biased to cutoff through the relay contacts. In the RECEIVE position, with the relays de-energized, the tubes that are used only in transmit are cut off in the same manner. Relay K1 when de-energized, feeds signals from the output pi-network to the receiver, and is used also to control external switching circuits. In transmit position the meter indicates the cathode current of the power amplifier. In receive position, it indicates the voltage across R703 in the screen grid of the first IF Amplifier, V7, which is inversely proportional to the AGC voltage used to control the gain of the tube. Thus, the meter indicates the relative strength of received signals.

POWER RATING

The Swan 270 is capable of 180 watts, PEP input under steady state two-tone test conditions, when operated with any of the recommended power supplies. The peak envelope power, when voice modulated, is considerably greater, typically 260 watts, or more.

The built-in power supply produces a no-load plate voltage of approximately 880 volts. Under TUNE conditions, or CW operation, this voltage will drop

to approximately 680 volts. Under steady state two-tone modulation, the voltage will drop to approximately 710 volts. If the power amplifier idling current is 30 ma, and the two-tone current, just before flat-topping, is 200 ma, the peak two-tone current will be 300 ma. Under these conditions the PEP input will be 710 volts times 300 ma = 213 watts. Under voice modulation, because average power is considerably less, the power amplifier plate and screen voltages will be maintained higher, even during voice peaks, by the power supply filter capacitors. Peak plate current will therefore also be higher than with two-tone test conditions. Under typical operating conditions, peak plate current before flat-topping will be 350 ma at 800 volts, to result in an input of 280 watts, PEP. Readings of cathode current will not reflect this power input, however, because of the damping in the cathode current meter, cathode current readings under normal voice input should not average more than 100 to 120 ma.

POWER AMPLIFIER PLATE DISSIPATION

There is often a misunderstanding about the plate dissipation of tubes operated as AB1 amplifiers under voice modulation. In the Swan 270, while in the transmit position, and with no modulation, the plate voltage will be approximately 830 volts, the plate current 30 ma, and the power input will be 25 watts.

Authorities agree that the average voice power is 10 to 20 db below peak voice power. Normally, some peak clipping in the power amplifier can be tolerated, and a peak-to-average ratio of only 6 db may sometimes occur. Under such conditions, the average power input will be 80 watts, and average plate current will be 100 ma. With power amplifier efficiency of 65 percent plate dissipation will be approximately 26 watts. The 6LQ6 is rated at 30 watts, continuous duty cycle, in normal TV service. Thus it can be seen that under normal operating conditions, the power amplifier tube in the Swan 270 is not being driven very hard. Note, however, that proper modulation level must be maintained by correct setting of Mic. Gain, and that the length of time in TUNE position must be limited to not more than 30 sec. at a time.

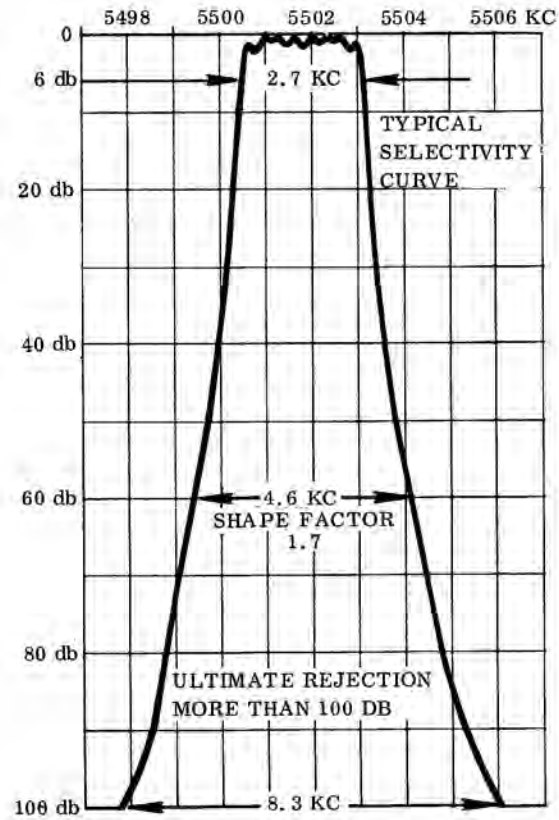

FIGURE 3. CRYSTAL FILTER CHARACTERISTICS

INSTALLATION

GENERAL

The installation of the Swan Cygnet is not at all difficult and it involves only the placement of the transceiver in its operational area (fixed or mobile), connection of power (either 117 volts ac, or 12 volts dc), and the connection of an antenna. The following paragraphs are therefore devoted to the installation requirements involving microphones, fixed and mobile operation, and recommended antenna types. Before actual installation, be sure to check for possible shipment damage. Remove the cabinet, (three screws on each side), and check to make sure that all tubes are firmly in place.

FIXED INSTALLATION

Locate the Cygnet in an area which is well ventilated and which provides complete operational freedom of the front panel controls. Connect the ac power cord to the 12 pin Jones connector on the back. If the Cygnet is a 117 volt model, plug the power cord into a standard 117 volt, 50-60 cycle outlet having a capacity of at least 10 amps. If the Cygnet is an Export model, it should first be set to the proper voltage tap: 208, 220, or 240 volts, 50-60 cycles. Remove the cabinet, and locate the terminal strip near the top of the power transformer. There are 3 terminal lugs, and a decal indicates the voltage tap for each. Connection has been made to the 220 volt tap at the factory. If your supply voltage is 208 or 240, unsolder the red colored wire and move it accordingly.

Connect an antenna to the Cygnet which is suitable for the band which is to be used. Refer to the antenna section of this manual for other information.

FIXED ANTENNAS

A standard PL239 coax connector plug will fit the Cygnet's antenna jack, and 50 or 75 ohm coax cable to the antenna is recommended. RG58 or RG 59 is satisfactory for runs up to 50 feet. For longer runs the larger RG8 or RG11 produces less line loss, particularly on 10 meters.

Any of the common antenna systems designed for use on the amateur high frequency bands will work well with the Cygnet. However, the amateur should consider an antenna system which best fits his operational requirements. For example, a rotatable beam antenna is usually best suited on the 20, 15 and 10 meter bands for DX operation, and an inverted "V" or a similar antenna is usually best suited for 80 and 40 meters. Methods for constructing antennas and antenna tuners are described in detail in the ARRL Antenna Handbook and similar publications. It is recommended that these publications be consulted during the design of any antenna system.

MOBILE INSTALLATION

Many different methods of mobile installation are possible, and it is expected that hams will find methods which are best suited for their installation requirements. Swan Electronics has available a Mobile Mounting Kit which is suitable for under-the-dash installations. Figure 4 shows the recommended mounting methods using this kit.

A 12 pin Jones connector is supplied with the Cygnet for dc operation. This connector has been prewired with two leads; a red wire for +12 to 14 volts dc, and a black wire for negative ground. Longer leads are not supplied since the length and wire gauge will vary with different installations. It is recommended that the leads run directly to the battery, but if this is impossible for the particular installation, connection under the dash to a 12 volt line may be used. For lead lengths up to about 5 feet, use 10 gauge wire. Splice them to the short wires coming from the Jones connector. Solder and tape well. For lead lengths of 5 to 10 feet use 8 gauge wire.

IMPORTANT

> A 30 ampere fuse must be connected in series with the positive lead. This fuse should be located close to the battery end of the lead. The fuse holder may be either an in-line type, or an insulated block type. This fuse is available from your dealer.

MOBILE ANTENNAS

Mobile antenna installations are quite critical since the antenna represents a number of compromises when used on the high frequency bands. Many amateurs lose the efficiency of their mobile antennas through improper tuning. Points to remember about the mobile antenna are:

1. The "Q" of the antenna loading coil should be as high as possible. There are several commercial models available which use high "Q" coils, including the Swan Models 45 and 55 mobile antennas. (Contact your Swan distributor or Swan Electronics for details.)
2. The loading coil must be capable of handling the power of the Model 270 without over hea ing. In TUNE position, the power output of the transceiver may exceed 150 watts. Wid spaced, heavy wire loading coils are essent
3. The SWR bridge is a useful instrument, but unfortunately it is quite often misunderstooc and over rated in importance. Basically, tl SWR bridge will indicate how closely the an

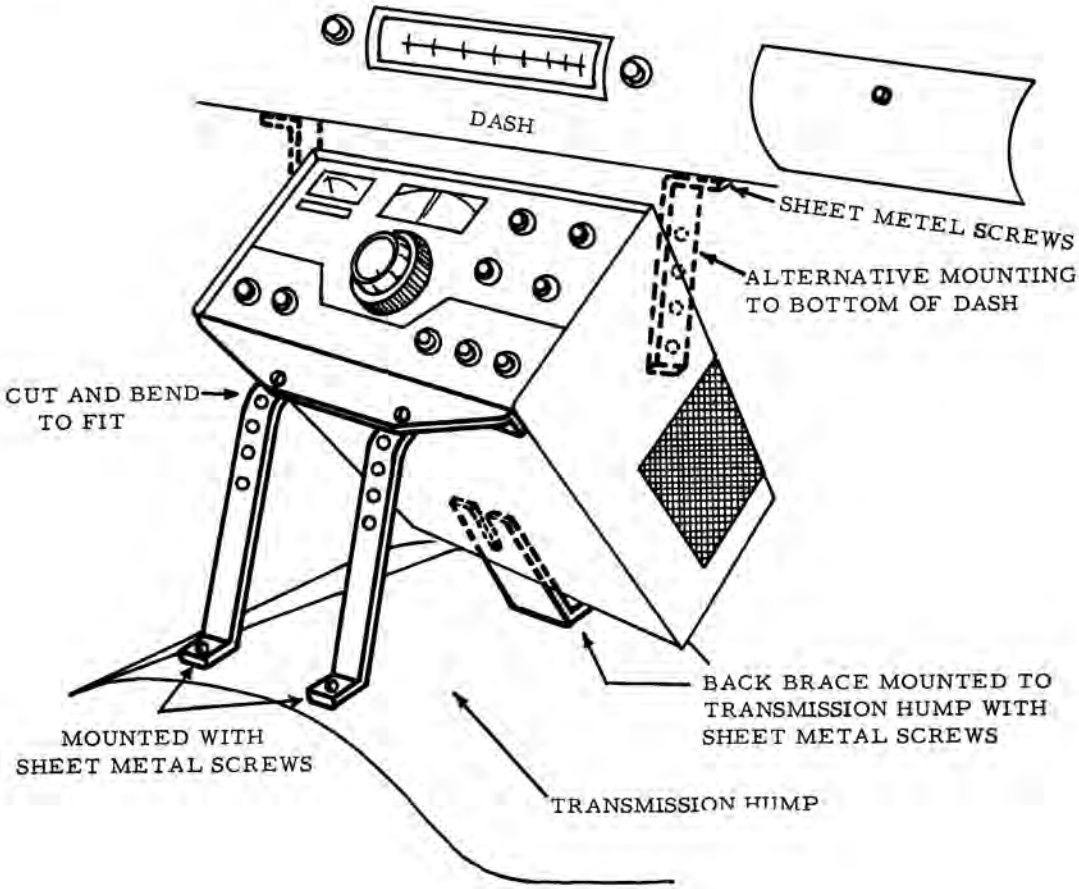

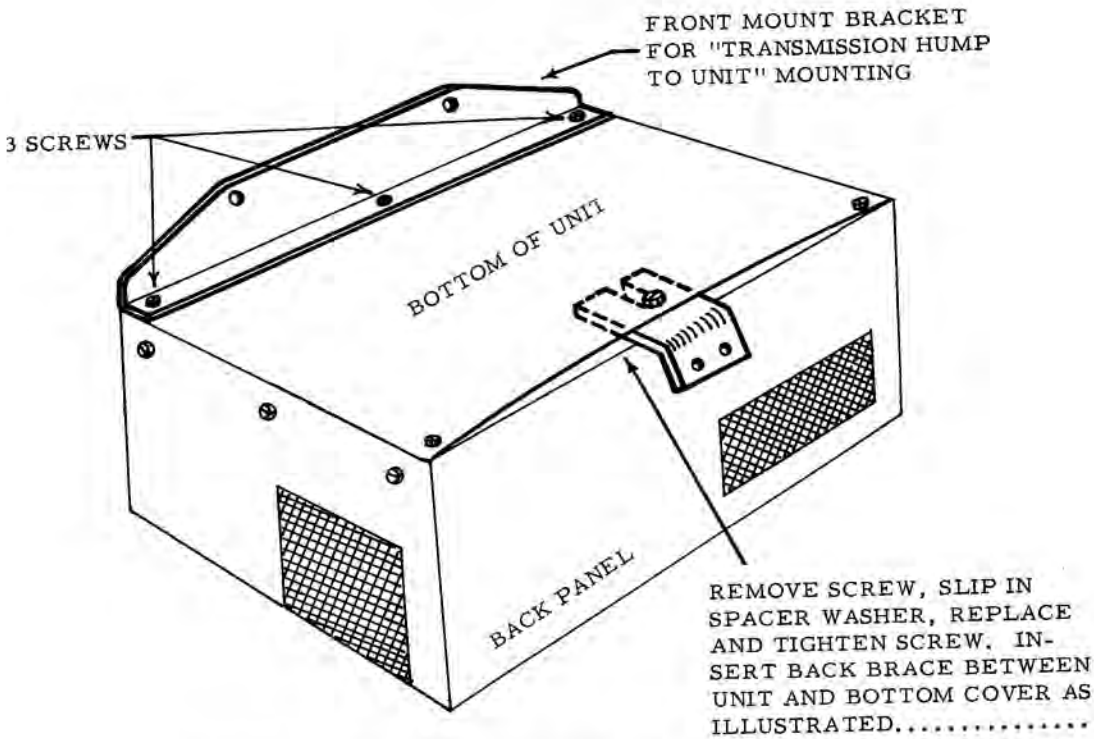

FIGURE 4. MOBILE INSTALLATION MOUNTING DETAILS

tenna load impedance matches the transmission line. With long transmission lines, such as will be used in many fixed station installations, it is desirable to keep the impedance match fairly close in order to limit power loss. This is particularly true at the higher frequencies. The longer the line, and the higher the frequency, the more important SWR becomes. However, in mobile installations the transmission line seldom exceeds 20 feet in length, and an SWR of even 4 to 1 adds very little to power loss. The only time SWR will indicate a low figure is when the antenna presents a load close to 50 ohms, but many mobile antennas will have a base impedance as low as 15 or 20 ohms at their resonant frequency. In such a case, SWR will indicate 3 or 4 to 1, and yet the system will be radiating efficiently.

4. The really important factor in your mobile antenna is that it should be carefully tuned to resonance at the desired frequency. The fallacy in using an SWR bridge lies in the fact that it is sometimes possible to reduce the SWR reading by detuning the antenna. Field strength may actually be reduced in an effort to bring SWR down. Since field strength is the primary goal, we recommend a Field Strength Meter for antenna tuning.

5. For antenna adjustments, the Swan 270 may be loaded lightly to about 100 ma. cathode current instead of the usual 200-300 ma. This will limit tube dissipation during adjustments, and will also held reduce interference on the frequency. In any case, do not leave the transmitter on for very long at one time. Turn it on just long enough to tune and load, and get a field strength reading.

Start out with the antenna whip at about the center of its adjustment range. Set the VFO to the desired operating frequency and then adjust P. A. TUNE for dip, and P. A. LOAD for 100 ma. Then observe the field strength reading. The Field Strength Meter may be set on top of the dash, on the hood, or at an elevated location some distance from the car.

Change the whip length a half inch, or so, at a time, retune the P. A. for 100 ma loading each time, and check field strength. Continue this procedure until the point of maximum field strength is found. This adjustment will be most critical on 75 meters, somewhat less critical on 40, until on 10 meters the adjustment will be quite broad. After tuning the antenna to resonance, load the P. A. to full power.

MICROPHONE

The microphone input is designed for high impedance microphones only. The choice of microphone is important for good speech quality, and should be given serious consideration. The crystal lattice filter in the transceiver provides all the restriction necessary on audio response, and further restriction in the microphone is not required. It is more important to have a microphone with a smooth, flat response throughout the speech range. The microphone plug must be a standard 1/4 inch diameter three contact type. The tip connection is for push-to talk relay control, the ring connector is the microphone terminal, and the sleeve is the common chassis ground. The microphone manufacturer's instructions should be followed in connecting the microphone cable to the plug. Either a hand-held or desk type microphone with push-to-talk control will provide a suitable installation.

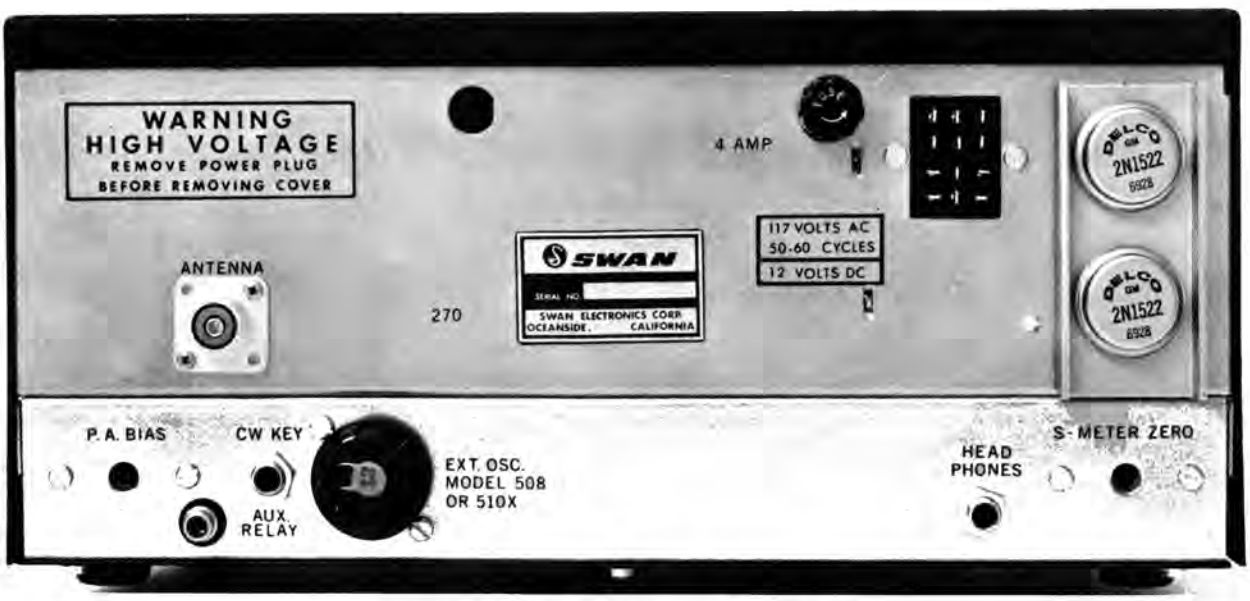

FIGURE 5. SWAN CYGNET MODEL 270 REAR VIEW

OPERATION

CONTROL FUNCTIONS

ON-OFF SWITCH (On RF Gain Knob)	Turns power supply on and off.
CAL-REC-CW	
Calibrate	All voltages are applied to receiver. Grounds cathode of V12.
Receive	All voltages are applied to receiver.
CW-Tune	Transmitting circuits are energized. C1501 is disconnected from ground shifting carrier frequency into filter passband. Carrier is fully inserted. P. A. cathode resistor is switched in, reducing input power.
MIC. GAIN	Controls potentiometer R1404 in the grid of V14A and controls amount of audio to the balanced modulator.
CAR. BALANCE	Controls potentiometer R1307 in the balanced modulator deflection plate circuit, and permits nulling out the carrier.
RF GAIN	Controls variable resistor R505, common in the grids of Receiver Mixer V6, RF Amplifier, V7 and V8 IF Amplifiers.
AF GAIN	Controls potentiometer R1101 in grid circuit of V11 AF Output, and controls audio volume.
MAIN TUNING	Controls C1612 in frequency determining tank circuit of VFO.
DRIVER	Controls C2A and C2B in plate tanks of transmitter mixer and driver.
PA TUNE	Controls C408 in pi-network to tune final power amplifier plate to resonance.
PA LOAD	Controls C411 in pi-network to match impedance of output load. Tunes input to Receiver RF Amplifier.
MAIN BANDSWITCH	Switches tank coils and associated capacitors in VFO, VFO Amplifier, Driver and Transmit Mixer.
SIDEBAND SELECTOR	Selects upper or lower sideband.

PRE-OPERATION ADJUSTMENTS

Before connecting any cables to the Swan 270 perform the following steps:

1. Rotate the PA BIAS control on the rear chassis apron fully counter clockwise.
2. Rotate the CAL-REC-TUNE-CW to REC.
3. Rotate the RF Gain Control counter clockwise to operate the power switch to OFF.

CONNECTIONS

1. Connect wire from earth ground to ground stud provided on rear of chassis. This is not essential, but is recommended.
2. Connect a 50 to 75 ohm antenna feed-line to the coaxial connector on rear panel.
3. Connect the power supply cable to the Jones connector on the rear panel.
4. Connect the power supply cable to the proper voltage source.

WARNING

DANGEROUS HIGH VOLTAGE IS PRESENT ON THE PLATE OF THE POWER AMPLIFIER WHENEVER THE POWER SUPPLY IS ENERGIZED.

RECEIVE OPERATION

1. Rotate the RF GAIN Control clockwise to about the 3 o'clock position. The power switch will operate applying voltage to the transceiver.
2. Wait approximately one minute to allow the tube filaments to reach operating temperature. During this period, perform the following steps:
   (a) Rotate BANDSWITCH to desired band.
   (b) Rotate MIC. GAIN fully counter-clockwise.
   (c) Rotate CAR. BAL. control to the mid-scale position.
   (d) Set PA TUNE control to mid-position.
   (e) Set DRIVER control to mid-position.
   (f) Set PA LOAD to mid-position.
   (g) Set tuning dial to desired operating frequency.
   (h) Set AF GAIN control to approximately 10 o'clock position.

3. Carefully adjust the DRIVER and the PA TUNE controls for maximum receiver noise.

NOTE:

The DRIVER control resonates the transmitter driver stages and the receiver RF amplifier plate circuit. The PA TUNE and PA LOAD controls adjust the input and output capacitors in the transmitter power amplifier final plate circuit, as well as the receiver RF amplifier grid circuit. Proper adjustment of these controls in the receive position will result in approximately resonant conditions in the transmitter stages.

RECEIVER TUNING

Precise tuning of a single sideband signal is very important. Do not be satisfied to merely tune until the voice can be understood, but take the extra care of setting the dial to the exact spot where the voice sounds natural. Above all, avoid the habit of tuning so that the voice is pitched higher than normal. This is an unfortunate habit practiced by quite a number of operators. The following points help to explain the effects of mistuning:

1. If you tune so the received voice is higher than normal pitch, you will then transmit off frequency, and your voice will sound lower than normal pitch to the other station. He will probably retune his dial to make you sound right. If you keep this up, you'll gradually waltz one another across the band. If both of you are mistuning to an unnatural higher pitch, you'll waltz across the band twice as fast. (And someone will no doubt be accused of frequency drift).

2. Mistuning results in serious harmonic distortion on the voice, and should be quite noticeable to the average ear. Some will claim that if they don't know how the other person's voice actually sounds, they can't tune him in properly, but this is not true. With a little practice, it will be fairly easy to tell. Some voices are relatively rich in harmonics, and are easier to tune in than a person with a "flat" voice. Also, a transmitter, which is being operated properly with low distortion will be easier to tune in than one which is being over-driven and is generating excessive distortion. There is no mistaking when you have a station tuned right on the nose. It will sound just like "AM", so to speak. Mainly, avoid the habit of tuning so everyone sounds higher than normal pitch, or like Donald Duck. This is incorrect, unnecessary, and sounds terrible.

3. A vernier control for receive frequency, sometimes referred to as "incremental tuning", is not available on the Swan 270. Such a device is not necessary if proper tuning habits are exercised.

4. Your Swan 270 will automatically transmit on exactly the same frequency as the one to which you are listening. There is no adjustment for making them the same, since by using the same oscillator for both send and receive, it happens automatically. If separation of receive and transmit frequency control is desired, the Model 508 or 510X VFO unit may be used.

TRANSMITTER TUNING

NOTE:

The sideband selector switch should be in the "NORM" position during tune up, with the meter switch set to PA CATH.

CAUTION:

THE MODEL 270 WILL TUNE OUTSIDE THE AMATEUR BANDS. CARE MUST BE EXERCISED NOT TO TRANSMIT ON THESE FREQUENCIES.

Step 1. Switch the Microphone Switch to transmit mode, and observe the cathode current reading on the meter.

Step 2. Quickly rotate the CAR. BAL. control until the meter reads minimum. This will occur with the control near 12 o'clock. If the control has no effect at this time, do not be concerned.

Step 3. Next, adjust the P. A. BIAS control on the back of the chassis until the meter reads 40 ma. as indicated by the Delta symbol on the meter scale.

Step 4. If this is the first time the Transceiver is being tuned to this band, set the LOAD to 11 o'clock. After experience in tuning up, the control may be set to whatever position has been found optimum on each band. Now, with the transceiver still in transmit mode, in rapid succession:

(a) Turn the CAR. BAL. control clockwise approximately 30 degrees, or one "hour" in position.

(b) Rotate the DRIVER control for maximum meter reading.

(c) Rotate the P. A. TUNE control for minimum meter reading, or "dip".

(d) Readjust CAR. BAL. control for minimum reading.

IMPORTANT - Tuning the P. A. TUNE for minimum, or "dip", is known as "resonating" the power amplifier plate circuit, and is very important to preserving P. A. tube life. If the transceiver is held in TRANS. or CW position for more than a few seconds while out of resonance and with some grid drive, the 6LQ6 tube may be severely damaged. For this reason, we repeat:

CAUTION

DO NOT HOLD THE TRANSCEIVER IN TRANSMIT OR CW POSITION FOR ANY LENGTH OF TIME WITHOUT IMMEDIATELY RESONATING THE P. A. TUNE CIRCUIT. THE DRIVER MUST BE PEAKED, AS IN (b) ABOVE, AND THIS REQUIRES SOME CARRIER INSERTED, AS DESCRIBED IN (a), SO IT CAN BE SEEN THAT THESE STEPS MUST BE PERFORMED QUICKLY. IF THE P. A. LOAD CONTROL IS TOO FAR CLOCKWISE, IT MAY NOT BE POSSIBLE TO FIND A "DIP" WITH THE P. A. TUNE CONTROL.

Step 5.

(a) Set the P. A. LOAD control to 11 o'clock or to the position determined by previous operating.

(b) Switch to TUNE - CW mode, quickly adjust P. A. TUNE for the "dip" in meter reading.

(c) Advance the P. A. LOAD control clockwise, in small steps, each time dipping P. A. TUNE again, until a shallow 10 percent dip in plate current is observed when tuning through resonance. In other words, if the meter reads 250 ma. with P. A. TUNE off resonance, it should dip to about 225 ma. at resonance. Adjust P. A. LOAD for this condition. We recommend setting the P. A. LOAD control in this manner rather than setting it for some specific meter reading, because the optimum loading point varies considerably, depending on frequency, tube condition, and supply line voltage. On the lower bands, it will not be unusual to have 300 ma. off resonance, in which case the P. A. LOAD control should be set for a dip to about 270 ma. On 10 meters the same Cygnet may read only 200 ma. off resonance, and so the P. A. LOAD control should be set for a dip to 180 ma. in this case.

NOTE:

Observe all the preceding cautions while tuning. Be sure to resonate the P. A. TUNE control quickly, except for the very brief moments when off-resonance meter reading is being observed. Always return to the "dip" quickly. Also, be sure to observe the 30-second time limit on tuning.

VOICE TRANSMISSION

After tuning up as outlined above, switch to REC. position. Press the microphone switch and then carefully set the CAR. BAL. control for minimum meter reading. While speaking into the mike, slowly rotate the MIC. GAIN control until occasional peak readings of 100 to 120 ma. are obtained. With most microphones, the MIC. GAIN control will be set between 9 and 12 o'clock, but it may vary considerably. The ALC circuit will help limit cathode current, but turning the MIC. GAIN up too high will still produce flat-topping and spurious signals, so it is important to hold it down. The meter is quite heavily damped, and its reading with average voice modulation may not look very impressive, but the voice peaks are going well over the 260 watt power rating of your Swan transceiver, and signal reports will verify this fact.

NOTE:

Transceiver will not modulate properly with Function Switch in CAL. position.

AM OPERATION (Single Sideband With Carrier)

(a) Tune transmitter to full output on single sideband as described above.

(b) Rotate MIC. GAIN control to minimum, full CCW.

(c) With Push-to-talk pressed, rotate CAR. BAL. control until cathode current is approximately 75 ma.

(d) While talking in a normal tone of voice into the microphone, increase MIC. GAIN setting until the meter kicks upward slightly. This setting will result in excellent AM transmission.

CW OPERATION

(a) Insert a CW Key in the Key Jack on back of the Transceiver.

(b) Close the key and tune the transmitter as outlined in Step 5. Power input will be approximately 180 watts.

(c) In CW operation it will be necessary to switch the Function control back to REC. for receiving and then to CW for transmitting.

(d) While receiving, the carrier oscillator frequency is located 300 cycles outside the passband of the crystal lattice filter, thus providing a single heterodyne note, or "single-signal" for CW reception. When transmitting in CW mode, the carrier frequency is moved approximately 800 cycles higher, placing it well inside the passband. This frequency shift is termed "Off-set CW transmit frequency," and avoids the problems encountered when the receive and transmit frequency are exactly the same. This is desirable for voice communication, of course, but when using the CW Keying mode the receiver must be tuned off frequency several hundred cycles in order to hear an audio beat. By providing this shift automatically, CW operation is greatly simplified.

ALIGNMENT AND TROUBLESHOOTING

The alignment procedures presented in this section are routine touch-up procedures for all tuned circuits and other adjustments. It is recommended that the procedures be performed in the order presented. However, if complete realignment is not required (as may be the case when just one tube is replaced), perform just those procedures required. Refer to Figures 5, 6 and 7 for component placement.

RECEIVER ALIGNMENT

Receiver alignment involves only the adjustment of the Second IF coil. The R. F. coils which affect receiver performance are also used in transmit mode. Their adjustment is covered under "TRANSMITTER ALIGNMENT".

1. After allowing approximately five minutes for warm-up, tune the receiver to the middle of any band and at a "clear" frequency.

2. Adjust the P. A. TUNE, P. A. LOAD, and DRIVER front panel controls for maximum background noise.

3. Adjust IF coil L801 for maximum background noise.

S-METER ADJUSTMENT

With antenna disconnected and RF Gain fully clockwise, set R706, located on rear panel, for zero meter reading. Make sure no local signals are being received.

TRANSMITTER ALIGNMENT

1. Power Amplifier Bias.

   (a) Switch meter to P. A. CATH.

   (b) After allowing approximately five minutes for warm-up, key the transmitter with the microphone switch. Without speaking into the microphone, adjust the CAR. BAL. control for a minimum power amplifier current.

   (c) Again key the transmitter with the microphone switch, and without speaking into the microphone, adjust the P. A. BIAS control on the rear panel for the delta symbol on the meter, corresponding to 40 ma idling current.

2. Transmitter Circuits. The alignment of transmitter circuits involves the adjustment of tuned circuits in the VFO Amplifier, V1, the Transmit Mixer, V2, and Driver stage, V3. It is recommended that a dummy load be connected to the antenna jack during this series of adjustments.

   (a) Start first by adjusting 7 mc band. Set tuning dial and driver control as indicated by table I, page 18.

   (b) Set P. A. LOAD control to 9 o'clock.

   (c) Press Mic. Button. Check idling current. It should be on the delta symbol when CAR. BAL. control is nulled. Adjust P. A. BIAS control, if required.

   (d) With Mic. Button pressed, adjust CAR. BAL. control for slight increase in meter reading, 50 to 60 ma. Adjust P. A. TUNE to resonance, (dip).

   (e) Adjust coils as indicated by alignment chart for maximum meter reading. When reading goes higher than 80 ma., or so, adjust CAR. BAL. for 60 ma. again.

   (f) Adjust coils carefully for maximum peak. Exercise caution with CAR. BAL. control. Do not exceed 100 ma. reading for more than a few seconds. Be sure P. A. TUNE control is resonated, (adjusted for "dip" in meter reading).

   (g) Switch to 3.5 mc band, and repeat steps (a) through (f), following the tuning chart carefully. Follow this procedure through for each other band.

3. Power Amplifier Neutralization. Perform the power amplifier neutralization adjustment on 20 meters and in the following manner.

   (a) After allowing approximately five minutes for warm-up, tune the transmitter to approximately 14.250 mc.

   (b) Position the P. A. LOAD control to the 9 o'clock position, (full counter clockwise).

   (c) Set meter switch to P. A. CATH.

   (d) Key the transmitter with the micro-

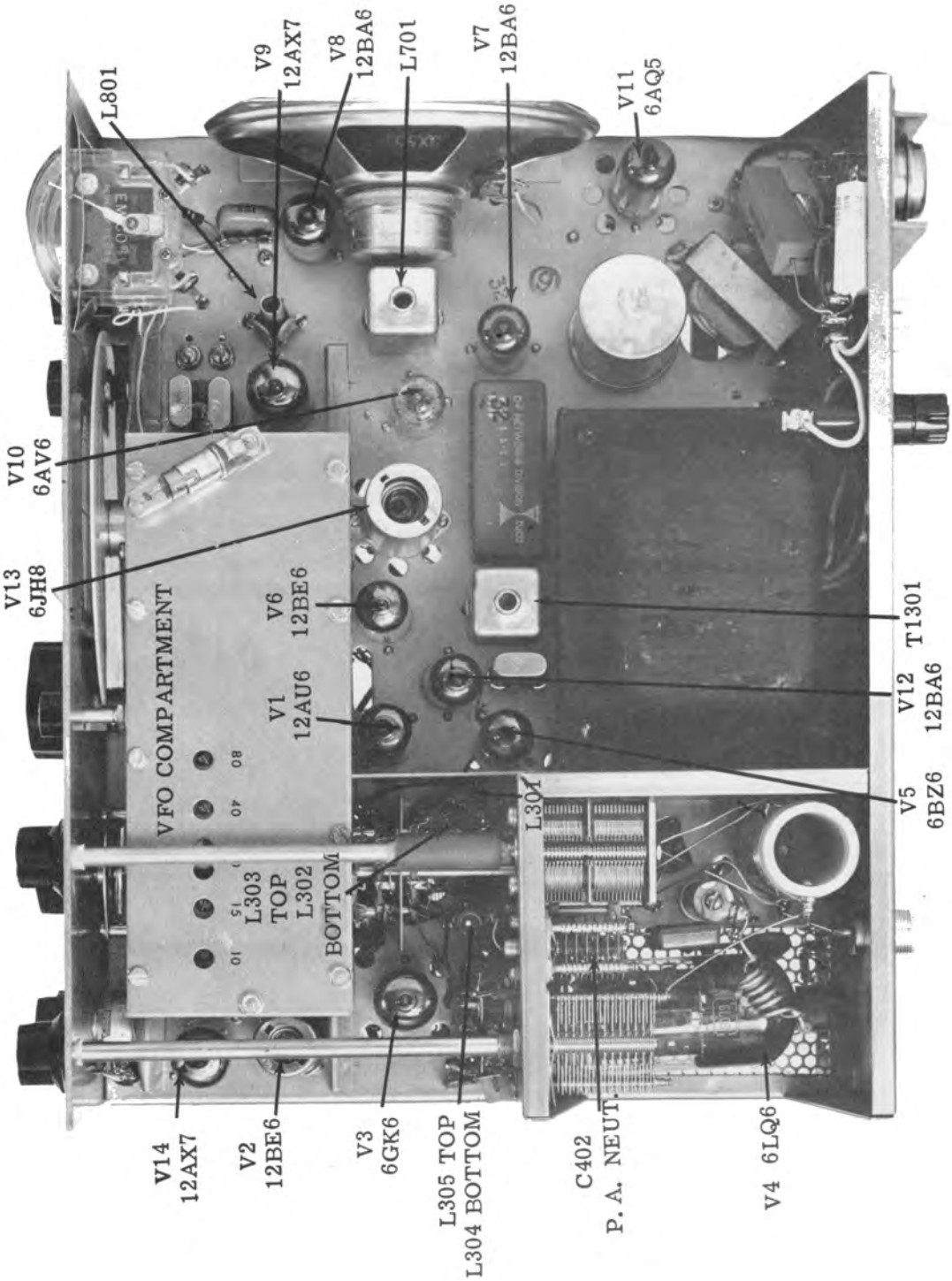

FIGURE 6. SWAN CYGNET MODEL 270 TOP VIEW

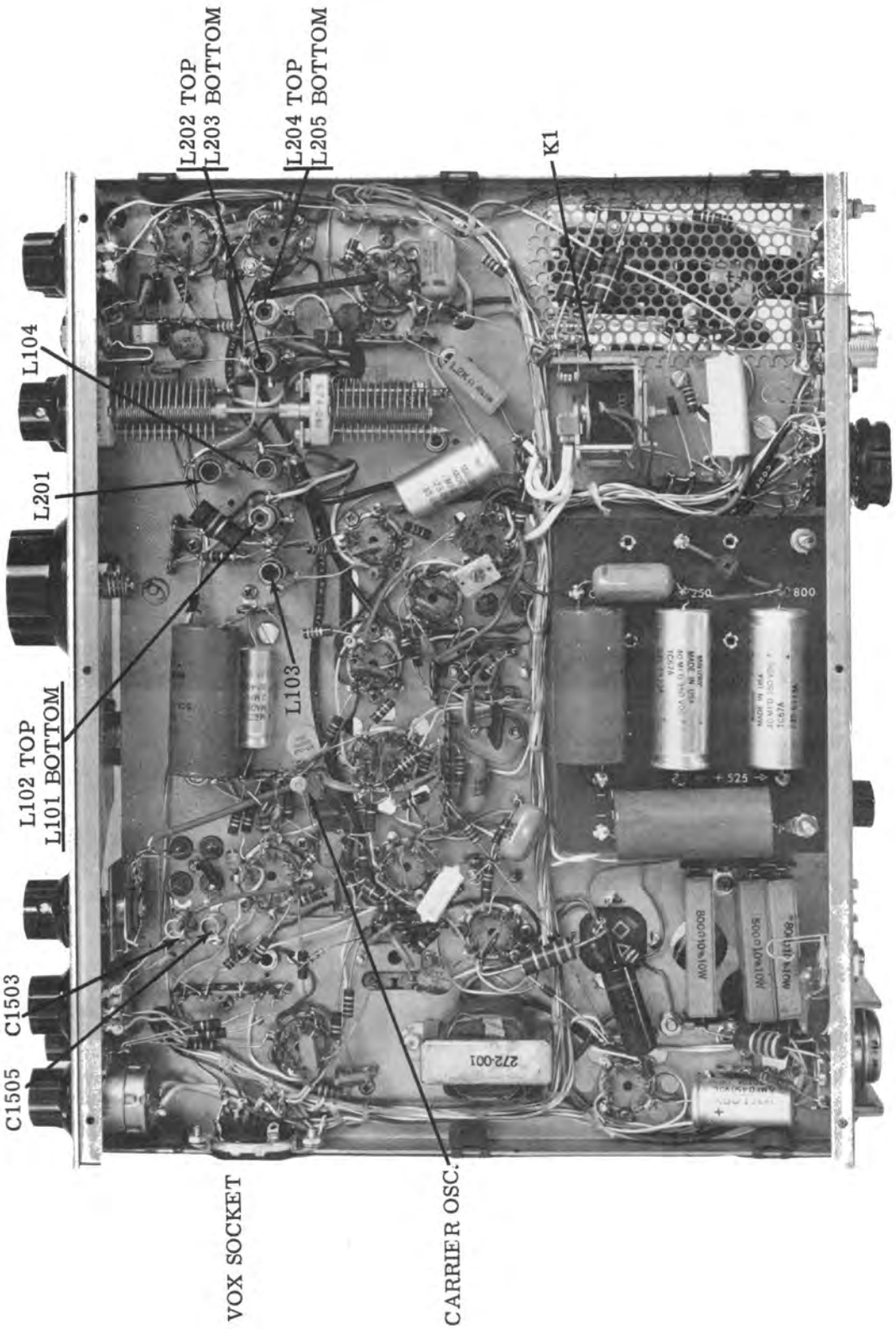

FIGURE 7. SWAN CYGNET MODEL 270 BOTTOM VIEW

phone switch, and without speaking into the microphone, adjust the CAR. BAL. control for a power amplifier current of approximately 100 ma. Adjust the DRIVER control for peak. Quickly adjust CAR. BAL. to 100 ma. again if it increased to a higher reading.

(e) With the Mic. Button still pressed, rotate the P. A. TUNE control through its range from 9 o'clock to 3 o'clock. You will note a pronounced "dip" in meter reading at resonance. Observe any tendency for the meter to "peak" above the 100 ma. plateau on either side of resonance. If there is such a peak, adjust C402, the P. A. Neutralizing trimmer to suppress the peak. When properly neutralized, the meter reading will hold steadily at 100 ma except for the sharp dip at resonance but there will be no peak above the 100 ma level.

(f) Key the transmitter with the microphone switch and re-adjust the CAR. BAL. control for minimum power amplifier current. Power amplifier idling current should be on the delta symbol. If not, repeat the power amplifier bias adjustment described on Page 13.

4. Carrier Frequency Adjustment. A dummy load wattmeter and audio generator are required for this adjustment.

(a) After allowing a five-minute warm-up period, tune the transmitter to approximately 14. 250 mc.

(b) Key the transmitter with the microphone switch and adjust the CAR. BAL. control for minimum power amplifier current.

(c) Insert 1500 cycles of audio from an audio generator into the Mic. Jack located on the front panel. Adjust the gain of the audio generator and the Mic. Gain control (R1404) until the wattmeter reads approximately 10 or 15 watts.

(d) Adjust the first IF coil (L701) for maximum output. Adjust both slugs of the balanced modulator transformer (T1301) for maximum output.

(e) Increase gain of audio generator until wattmeter reads 40 watts. Sweep generator down to 300 cycles and adjust the normal sideband carrier oscillator trimmer (C1503) for a reading of 10 watts.

(f) Switch to the Opposite Sideband. Adjust the Opposite Sideband Carrier Oscillator trimmer (C1505) for a reading of 10 watts.

(g) Re-check with audio generator set at 1500 cycles and 40 watts. Sweep down to 300 and re-adjust Carrier Oscillator capacitor, if required, for 10 watts.

5. Carrier Balance Adjustment. Several times during the preceding adjustments, the CAR. BAL. control has been adjusted for varying reasons. Be sure that this control is always re-set for exact null before operating.

NOTE:

If at any time the Balanced Modulator Tube (6JH8) is replaced it may be necessary to adjust R1311, the Mini Potentiometer located on the 6JH8 tube socket, for exact Carrier Balance Null. This control is factory set and should not need adjustment except in case of tube replacement. A recommended way of adjusting the control is to locate your transmitting signal on an external receiver. Then adjust R1311 for minimum carrier while listening to the external receiver.

VFO CALIBRATION

1. After allowing approximately five minutes for warm-up, tune the receiver near 3800 KC. Using a frequency standard or a 100 KC crystal calibrator as an accurate signal source, tune the signal for zero beat and note the corresponding dial reading. If the 3800 KC signal does not zero beat at 3800 on the dial, adjust the 80 Meter trimmer until it does.

2. In a similar manner, check each of the other bands in the normally used portion of the band. For example: 7200 kc., 14, 200 or 14, 300, 21, 300 or 21, 400, 28, 700 or whichever portion of 10 meters is normally used. Accuracy in other parts of the bands will be quite good, but remember that the Cygnet is not to be considered a frequency standard. Be cautious when operating near band edges. FCC regulations require that every amateur radio station have a means available for measuring his transmitting frequency.

If a frequency meter or frequency counter is available, the information contained in Table II can be used to perform direct VFO and Carrier Oscillator frequency measurements.

TROUBLESHOOTING

The information contained in Figures 5, 6, and 7, together with the voltage and resistance chart and troubleshooting guide should be sufficient for most troubleshooting by the average licensed amateur radio operator.

VOLTAGE AND RESISTANCE CHART

TUBE TYPE	R = Rec. T = Trans.	Socket Pin Numbers								
		1	2	3	4	5	6	7	8	9
V1 12 AU6 VFO Amp.	R Volts	-.6	0	0	12.6AC	45	45	0		
	T Volts	-.6	0	0	12.6AC	50	50	0		
	Ohms	1.2K	0	0	0.2	0	*	0		
V2 12BE6 Trans. Mixer	R Volts	-1.2	0	0	12.6AC	250	-2	0		
	T Volts	-1.0	0	0	12.6AC	250	135	0		
	Ohms	100K	0	0	0.2	*	11K	35K		
V3 6GK6 Driver	R Volts	0	-6.7	0	0	6.3AC	NC	255	0	0
	T Volts	0	-6.7	0	0	6.3AC	NC	265	225	0
	Ohms	10	100K	0	0	0.3	NC	*	0.2	0
V4 6LQ6 Pwr. Amp.	R Volts	NC	-75	0	12.6AC	6.3AC	-75	0	0	NC
	T Volts	NC	-75	0	12.6AC	6.3AC	-75	225	0	NC
	Ohms	NC	6K	1.0	0.1	0.3	6K	0.1	0	NC
V5 6BZ6 Rec. R. F.	R Volts	0	0	6.3AC	0	255	115	0		
	T Volts	0	0	6.3AC	0	255	0	0		
	Ohms	1.1M	0	0.1	0	14K	40K	0		
V6 12BE6 Rec. Mixer	R Volts	0	0	0	12.6AC	250	100	-.5		
	T Volts	0	0	0	12.6AC	265	0	-.5		
	Ohms	100K	0	0	0.1	11K	40K	45K		
V7 12BA6 1st I. F.	R Volts	-1.8	0	0	12.6AC	210	48	0		
	T Volts	-1.8	0	0	12.6AC	220	50	0		
	Ohms	500	0	0	0.1	15K	50K	0		
V8 12BA6 2nd I. F.	R Volts	-1.7	0	0	12.6AC	205	105	0		
	T Volts	-1.7	0	0	12.6AC	225	0	0		
	Ohms	110K	0	0	0.1	15K	40K	0		
V9 12AX7 Det. A. F.	R Volts	55	-1	0	0	0	145	-.25	0	6.3AC
	T Volts	-3	-1.6	0	0	0	0	-.25	0	6.3AC
	Ohms	400K	11K	300	0	0	125K	1M	0	0.2
V10 6AU6 AGC Amp.	R Volts	0	2.0	6.3AC	0	0	0	225		
	T Volts	0	1.6	6.3AC	0	0	0	175		
	Ohms	500K	5K	0.2	0	0	700K	100K		
V11 6AQ5 A. F. Output	R Volts	-9	0	0	6.3AC	237	215	NC		
	T Volts	-9	0	0	6.3AC	262	0	NC		
	Ohms	500K	0	0	0.2	10K	12K	NC		
V12 12BA6 100 KC Cal.	R Volts	0	0	12.6AC	225	225	75			
	T Volts	0	0	12.6AC	175	175	55			
	Ohms	1M	0	0.1	100K	200K	0			
V13 6JH8 Bal. Mod.	R Volts	0	0	0	6.3AC	0	-1.4	0	0	0
	T Volts	45	45	75	6.3AC	0	-1.4	0	100	100
	Ohms	2K	75K	500K	0.2	0	35K	0	75K	75K
V14 12AX7 Mic. Amp.	R Volts	50	0	0	0	0	0	0	0	6.3AC
	T Volts	45	0	0	0	0	75	0	0	6.3AC
	Ohms	1M	0	0	0	0	600K	0	10K	0.2

TABLE I
TRANSMITTER ALIGNMENT CHART

Band	Driver Setting	Tuning Dial Dial	Adjust Coils
40	12 o'clock	7180KC	L103, L202, L302
80	12 o'clock	3790KC	L201, L301
20	12 o'clock	14205KC	L203, L303
15	12 o'clock	21270KC	L101, L204, L304
10	12:30 o'clock	28920KC	L102*, L104*, L205, L305

Note: Adjust 40 Meter band first

*To adjust L102, connect one end of a 2.7K resistor to the hot side of L104. Connect a .10 μf disc capacitor from ground to the other end of the resistor. Adjust L102. To adjust L104, use the same procedure as above, but connect the capacitor and resistor to L102.

TROUBLESHOOTING CHART

DEFECT	POSSIBLE CAUSE
PA IDLING CURRENT UNSTABLE	1. Defective Power Amplifier Tube (V4). 2. Defective BIAS control and/or associated components. 3. Defective bias power supply.
INABILITY TO LOAD PER OPERATION INSTRUCTIONS	1. Antenna not resonant at operating frequency. 2. Defective transmission line. 3. Defective antenna loading coil(s). 4. Tubes V1 through V4 defective.
INSUFFICIENT SIDEBAND SUPPRESSION	1. Carrier Oscillator (Q3) operating on incorrect frequency. 2. Crystal filter defective or mistuned.
INSUFFICIENT CARRIER SUPPRESSION	1. Tube V13 defective 2. Transformer T1301 defective or mistuned. 3. Carrier Oscillator (Q3) operating on incorrect frequency.
MICROPHONICS IN TRANSMITTER	1. Tubes V13 and/or V14 defective. 2. IF coil L701 Defective or incorrectly adjusted. 3. Microphone defective
LOW RECEIVER SENSITIVITY	1. Tubes V5 through V10 defective. 2. Incorrect adjustment of the transmitter Pi-Network. 3. IF coil L801 incorrectly adjusted or defective. 4. K1 relay contacts defective.

TABLE II
VFO AND CARRIER OSCILLATOR FREQUENCIES

Tuning Dial	V1 Injection Frequency	Q1 Osc. Frequency	Q3 Osc. Carrier Frequency
3500 KC	9000 KC	9000 KC	5500 KC
4000 KC	9500 KC	9500 KC	5500 KC
7000 KC	12,500 KC	(1/2) 6250 KC	5500 KC
7300 KC	12,800 KC	(1/2) 6400 KC	5500 KC
14,000 KC	8500 KC	8500 KC	5500 KC
14,350 KC	8850 KC	8850 KC	5500 KC
21,000 KC	15,500 KC	(1/2) 7750 KC	5500 KC
21,450 KC	15,950 KC	(1/2) 7975 KC	5500 KC
28,000 KC	22,500 KC	(1/2) 11,250 KC	5500 KC
29,700 KC	24,200 KC	(1/2) 12,100 KC	5500 KC

PARTS LIST

RESISTORS. All resistors are 1/2 watt 10% tolerance, unless otherwise noted.

R101	1.5K
R102	47K
R103	2.7K
R104	2.7K
R105	10K - 2W
R201	27K
R202	100K
R203	10K - 2W
R204	470K
R205	2.7K
R206	100K
R301	100K
R302	100K
R303	100 ohm
R401	100 ohm
R402	25K bias pot
R403	4.7K
R404	1K
R405	3 ohm 5W
R406	100 ohm 5W
R501	100K
R502	220K
R503	470 ohm
R504	10K
R505	25K R. F. Gain
R506	10K
R507	470K
R601	47K
R701	470 ohm
R702	10 meg
R703	33K - 2W
R704	1K
R705	33K
R706	25K S-Meter Zero
R707	15K
R708	47K 1W
R801	100K
R802	1K
R901	10K
R902	270 ohm
R903	270K
R904	47K
R905	10 meg
R906	1 meg
R907	47K
R908	100K
R909	47K
R1001	470K
R1002	270K
R1003	1 meg
R1004	4.7K
R1005	15K
R1101	1 meg A. F. Gain Pot
R1201	1 meg
R1202	27K
R1203	100K
R1301	1K
R1302	47K
R1303	47K
R1304	270K
R1305	27K
R1306	100K
R1307	5K Car. Bal. Pot
R1308	47K - 1W
R1309	2.2 meg
R1310	1K
R1401	150K
R1402	47K
R1403	1K
R1404	1 meg Mic. Gain Pot
R1405	2.2 meg
R1406	270K
R1407	470K
R1408	47K
R1501	18K
R1502	2.2K
R1503	1.5K
R1504	100 ohm
R1601	2.7K
R1602	1.5K
R1603	1K
R1604	470 ohm
R1605	2.7K
R1606	1K
R1607	470 ohm
R1701	150 ohm - 2W
R1702	2 ohm - 15W
R1703	350 ohm - 5W
R1704	4.7 ohm
R1705	150K - 2W
R1706	150K - 2W
R1707	1.2K - 5W
R1708	800 ohm 10W
R1709	2.7K
R1710	800 ohm 10W
R1711	500 ohm 10W
R1712	10K 2W
R1713	100K
R1714	270K

TRANSISTORS

Q1	2N706 Oscillator
Q2	2N5130 Buffer
Q3	2N706 Carrier Oscillator
Q4	2N1522 P. S. Switching
Q5	2N1522 P. S. Switching

DIODES

D501	1N34A
D701	1 Amp 600 V
D702	1 Amp 600 V
D1001	1N34A
D1201	1N34A
D1701	1N4002
D1702	1N4002
D1703	1 Amp 600 V
D1704-1707	RCA 39804
D1708-1711	RCA 39804
D1712	RCA 39804
D1713	1N4742 Zener

CAPACITORS Unless otherwise specified, a capacitor is listed in pico farads with a whole number and in micro farads with a decimal number.

C101	.01 +80 -20%, 500 V Disc
C102	44 pf Disc
C103	60 pf Disc
C104	68 pf 5% Disc
C105	25 pf 5% Disc
C106	.002, 20% 1KV Disc
C107	.01 +80 -20% 500 V Disc
C201	.01 +80 -20% 500 V Disc
C202	68 pf 5% Disc
C203	39 pf 10% Disc
C204	.01 +80 -20% 500 V Disc
C205	470 pf 5% SM
C206	2 pf 10% 500 V Ceramic
C207	.002 20% 1KV Disc
C208	.05 10% 200 V Mylar
C301	.002 20% 1 KV Disc
C302	68 pf 5% Disc
C303	39 pf 1% Disc
C304	510 pf 5% SM
C305	15 pf 3KV Disc
C306	.002 20% 1KV Disc
C308	270 pf 10% Disc
C309	15 pf 10% Disc
C401	3.3 pf 10% 3 KV
C402	20 pf Neut. Trimmer
C403	.01 +80 -20% 500 Disc
C404	.002 20% 1KV Disc
C405	.01 +80 -20% 500 V Disc
C406	.002 20% 1KV Disc
C407	270 5% 2500 V Mica
C408	105 pf P. A. Tune
C409	100 10% 6KV Disc.
C410	330 10% 500 V Mica
C411	820 pf P. A. Load
C501	.01 +80 -20% 500 V Disc
C502	.01 +80 -20% 500 V Disc
C503	30 pf 10% 1 KV Disc
C602	.01 +80 - 20% 500 V Disc
C603	220 10% Disc
C604	430 pf 5% SM
C701	1 mfd 50 V
C702	50 pf 5% Disc
C703	.01 +80 -20% 500 V Disc
C705	.01 +80 -20% 500 V Disc
C801	.01 +80 -20% 500 V Disc
C802	.01 +80 -20% 500 V Disc
C803	50 pf 5% Disc
C804	50 pf 5% Disc
C805	.01 +80 -20% 500 V Disc
C901	220 pf 20% Disc
C902	.002 20% 1KV Disc
C903	150 pf 10% Disc
C904	2 mfd 450 V Electrolytic
C905	.001 20% Disc
C906	500 pf 20% Disc
C907	.001 20% Disc
C1001	.05 10% 200 V Mylar
C1002	.05 10% 200 V Mylar
C1003	.001 20% Disc
C1004	.01 +80 -20% 500 V Disc
C1101	.001 20% Disc
C1102	5 mfd 450 V
C1201	60 pf Trimmer
C1202	150 pf 10% Disc
C1203	50 pf 5% Disc
C1301	.01 +80 -20% 500 V Disc
C1302	.01 +80 -20% 500 V Disc
C1303	.01 +80 -20% 500 V Disc
C1304	220 pf 10% Disc
C1305	.002 20% 1KV Disc
C1306	.01 +80 -20% 500 V Disc
C1307	.01 +80 -20% 500V Disc
C1401	.01 +80 -20% 500 V Disc
C1402	.1 10% 400 V Mylar
C1404	.01 +80 -20% 500 V Disc
C1405	100 pf 10% Disc
C1406	.1 mfd, 400V
C1407	.01 +80 -20% 500 V Disc
C1501	15 pf 5% Disc
C1503	8 pf Piston Trimmer
C1504	20 pf 5% Disc
C1505	8 pf Piston Trimmer
C1506	270 pf N2200 10% Disc
C1507	270 pf N2200 10% Disc
C1508	.01 +80 -20% 500 V Disc
C2A	50 pf Driver Tuning
C2B	50 pf Driver Tuning
C1601	10 pf Selected
C1602	5 pf Trimmer
C1603	70 pf Selected
C1604	10 pf Trimmer
C1605	44 pf Selected
C1606	15 pf Trimmer
C1607	127 pf Selected
C1608	15 pf Trimmer
C1609	35 pf Selected
C1610	15 pf Trimmer
C1611	2 pf Dial Set Trimmer
C1612	20 pf Main Tuning
C1613	22 pf N 220
C1614	.01 +80 -20% 500 V Disc
C1615	270 pf SM
C1616	430 pf SM
C1617	27 pf SM
C1618	.01 +80 -20% 500 V Disc
C1619	.01 +80 -20% 500 V Disc
C1620	.002 20% 1KV Disc
C1701	100 mfd 35V
C1702	250 mfd 25V
C1703	.0047 1KV
C1704	.0047 1KV
C1705	100 mfd 35V
C1707	40 mfd 350 V Electrolytic
C1708	40 mfd 350 V Electrolytic
C1709	80 mfd 150 V Electrolytic
C1710A	40 mfd 450 V Electrolytic
C1710B	40 mfd 450 V Electrolytic
C1711	80 mfd 150 V Electrolytic
C1712	80 mfd 150 V Electrolytic
C1713	5 mfd 450 V Electrolytic
C1714	.01 +80 -20% 500 V Disc

COILS

L101	15 MTR VFO Amp.
L102	10 MTR VFO Amp.
L103	VFO Amp.
L104	10 MTR VFO Amp.
L201	80 MTR Mixer
L202	40 MTR Mixer
L203	20 MTR Mixer
L204	15 MTR Mixer
L205	10 MTR Mixer
L301	80 MTR Driver
L302	40 MTR Driver
L303	20 MTR Driver
L304	15 MTR Driver
L305	10 MTR Driver
L306	82 μ
L401	82 μ
L402	55 μ
L403	Pi-Network
L404	30 μ
L701	5500 Kc I. F.
L801	5500 Kc I. F.
L1501	200 μ
L1601	VFO Coil
L1602	200 μ
L1603	200μ
L1604	200 μ
L1701	17 μ
L1702	200 μ

TRANSFORMERS

T1101	A. F. Output Trans.
T1301	5500 Kc Bal. Mod. Trans.
T1701	DC Feed Back Trans.
T1702	Power Trans.
Z401	Parasitic Suppressor

RELAYS

K1	3 PDT Relay, 12 VDC Coil

CRYSTALS

Y1201	100 Kc Crystal Calibrator
Y1501	5500 Kc Carrier Oscillator
Y1502	5503. 3 Kc Carrier Oscil.

TUBES

V1	12 AU6 VFO Amplifier
V2	12 BE 6 Trans. Mixer
V3	6GK6 Driver
V4	6LQ6 Power Amp.
V5	6BZ6 Rec. RF Amp.
V6	12BE6 Rec. Mixer
V7	12BA6 First I. F. Amp.
V8	12BA6 Second I. F. Amp.
V9	12AX7 Prod. Det. /Rec. A. F.
V10	6AV6 AGC Amp.
V11	6AQ6 A. F. Output
V12	12BA6 100 Kc Cal.
V13	6JH8 Bal. Mod.
V14	12AX7 Mic. Amp.

SWITCHES

S1-A, B, C, D, E	Band Switch
S2	Power On & Off (part of RF Gain)
S3	Cal. Rec. Tune/CW
S4	P. A. Cathode/S-Meter
S5	Sideband Selector

ACCESSORIES

The following accessories are designed for use with the Model 270 Transceiver.

MODEL 1200-W LINEAR AMPLIFIER
MODEL 508 FREQUENCY CONTROL UNIT
MODEL 510 CRYSTAL CONTROLLED EXTERNAL OSCILLATOR
SWAN HYBRID PHONE PATCH
MODEL VX-2 PLUG-IN VOX UNIT

MODEL 1200-W LINEAR AMPLIFIER

Specifically designed as a matching linear for the Model 270 transceiver.

POWER RATING:

1200 Watts PEP Input in SSB Mode.
800 Watts DC Input on CW.

5 Frequency ranges:

(1) 3,000 - 4,500 kc
(2) 6,000 - 9,000 kc
(3) 11,000 - 16,000 kc
(4) 16,000 - 23,000 kc
(5) 23,000 - 35,000 kc

Uses four 6LQ6 tubes, Grounded Grid, Super Cathode-Drive Circuit.

Drive Requirement:

100 - 125 watts

METER:

Reads relative output and cathode current.

Includes Transmit-Receive Relay Control for simple operation with a Transceiver.

Wide range Pi Output Circuit matches 52 or 75 ohm coax cable or variety of other load impedances.

DIMENSIONS:

13" wide x 5 3/4" high x 10 3/4" deep.

WEIGHT:

23 pounds.

POWER SUPPLY

Computer grade electrolytic capacitors, 55 mfd. filtering at 1200 VDC rating.

Silicon Rectifiers.

AC Input: 117 volts, 50-60 cycles, 400 watts average input with voice modulation.

230 volt, 50-60 cycle model available on special order.

SWAN MODEL 508
FREQUENCY CONTROL UNIT

The Model 508 Frequency Control Unit is designed to serve as an external VFO to be used with the Swan 500C and Swan 270 Transceivers. It may also be used with the Model 350C when the accessory socket is installed on back of the transceiver after the jumper plug has been removed.

OPERATION

The position of the VFO selector switch on the front panel of the Model 508 will determine split-frequency operation, or transceiver operation on the 500C or 270 VFO or the Model 508 VFO. Rotating the Selector Switch to "XCV 500C" will permit transceive operation with the frequency controlled by the internal VFO of the Model 500C, or 270.

The "TRANS 500C/REC 508" position will select frequency operation. When in this position the frequency of the transmitted signal will be controlled by the internal VFO of the 500C or 270. The frequency of the signal being received will be determined by the Model 508 VFO. When rotating the Selector Switch to "XCV 508" the unit will be in transceive operation with the frequency determined by the setting of the VFO dial of the Model 508 VFO.

DIAL CALIBRATION

The dial of the Model 508 is basically calibrated in 5KC increments on each range. The 80-meter band is calibrated for direct Read-out on the dial. Calibration for all other ranges is read on the green portion of the dial. This dial is calibrated 0-500 and the reading of this scale would be additive to the megacycle range as selected by the VFO Bandswitch. For example: If the bandswitch is set for 7.0 megacycles, and the VFO dial is set for 250 on the green scale, the frequency is 7250 KC. When the bandswitch is rotated to 21 megacycles, VFO dial set on 350, the operating frequency would be 21350 KC, etc. The smaller white dial is a reference scale and is calibrated in approximately 1 KC increments.

VFO ALIGNMENT

A trimmer condenser is mounted on each of the VFO coils. Dial tracking has been set by pruning the coil, and will not ordinarily require further adjustment. When dial calibration changes beyond the adjusting range of the front panel "dial set" control, calibration may be restored by carefully adjusting the trimmer for that range. The VFO coils and trimmers are accessible by removing the bottom cover of the unit.

DIAL SET

A dial-set has been provided so that dial adjustment can be made at any 100 kc point of the dial. With calibrator on, set the dial to any 100 kc point closest to the frequency you wish to work. Now adjust dial set control to zero-beat the VFO with the 100 kc Calibrator. This provides greater accuracy of dial readout.

POSITION X

The "X" position is provided for possible in stallation of an additional tuning range.

WWV RECEPTION

To receive WWV simply tune up the transceiver in the 20 meter band. Switch the Model 508 VFO to the 3.5 MC range and tune to 4.0 MC. You will then receive the 15.0 MC WWV station. This is accomplished because the 508 oscillating frequency, 9.5 MC, is mixed with the transceiver I. F. frequency, 5.5 MC, resulting in 15.0 MC.

510 CRYSTAL CONTROLLED EXTERNAL OSCILLATOR

For MARS operation, Net and other fixed-channel operations.

The Model 510X crystal oscillator has been designed for crystal control operation on NET and MARS frequencies and may be plugged directly into the accessory socket on back of the Swan 270 by removing the jumper plug. Plugging the Model 510X directly into the 270 automatically removes the inboard VFO from the circuit.

The Model 510X oscillator unit provides for added versatility with Swan transceivers by crystal controlling the operating frequency. Not only does this permit fixed frequency "net" operation in the 80, 40 and 20 meter amateur bands, but the 510X also permits operation outside the amateur bands for MARS, commercial, and other services.

Operation on some MARS frequencies with the Model 270 will require adjustment of the driver and final stages. The higher bands have sufficient band spread to cover most of the MARS frequencies. Frequencies selected below the 80 meter band such as 3.0 MC to 3.5 MC or above the 80 meter band such as 4.0 MC to 4.5 MC will require realignment of the transceiver.

See chart below for necessary adjustments and frequency range of each band. These ranges can be adjusted either up or down quite easily in the field or at the factory, if necessary.

NOTE

Depending on what Mars frequency you have selected, between 3.0 MC to 3.5 MC or 4.0 MC to 4.5 MC, realignment of the transceiver may take away a portion of the 80-meter band.

BAND	DRIVER FREQ. RANGE	ALIGNMENT	P. A. PLATE Freq. Range and adjustment
80 Mtr. Production	3.5 MC - 4.2 MC without modification		3.5MC - 4.4 MC
80 Mtr. low freq. alternate adjustment	3.0 MC - 3.5 MC	*Adjust L201, L301 to lowest selected MARS freq. with DRIVER at 9 o'clock	Add 100pf 6KV in parallel with C409 to cover 3.0MC-3.5MC.
80 Mtr. high freq. alternate adjustment	4.0 MC - 4.5 MC	*Adjust L201, L301 to highest selected MARS frequency with DRIVER at 3 o'clock	Delete C409 to cover 4.0MC - 4.5MC
40 Mtr. Production	6.7 MC - 8.0 MC without modification		6.7MC - 11.0MC
20 Mtr. Production	14.0 MC - 14.9 MC without modification		11.3MC-19.0MC
15 Mtr. Production	21.0 MC - 22.5 MC without modification		17.5MC-35MC
10 Mtr. Production	28.0 MC - 30.0 MC without modification		17.5 - 35MC

*Peak for maximum cathode current

WARRANTY POLICY

SWAN ELECTRONICS CORPORATION WARRANTS THIS EQUIPMENT AGAINST DEFECTS IN MATERIAL OR WORKMANSHIP, EXCEPT FOR TUBES, TRANSISTORS, AND DIODES, UNDER NORMAL SERVICE FOR A PERIOD OF ONE YEAR FROM DATE OF ORIGINAL PURCHASE. THE WARRANTY IS VALID ONLY IF THE ENCLOSED CARD IS PROPERLY FILLED IN AND MAILED TO THE FACTORY WITHIN TEN DAYS OF DATE OF PURCHASE. DO NOT SHIP TO THE FACTORY WITHOUT PRIOR AUTHORIZATION. THIS WARRANTY IS LIMITED TO REPAIRING OR REPLACING ONLY THE DEFECTIVE PARTS, AND IS NOT VALID IF THE EQUIPMENT HAS BEEN TAMPERED WITH, MISUSED OR DAMAGED.

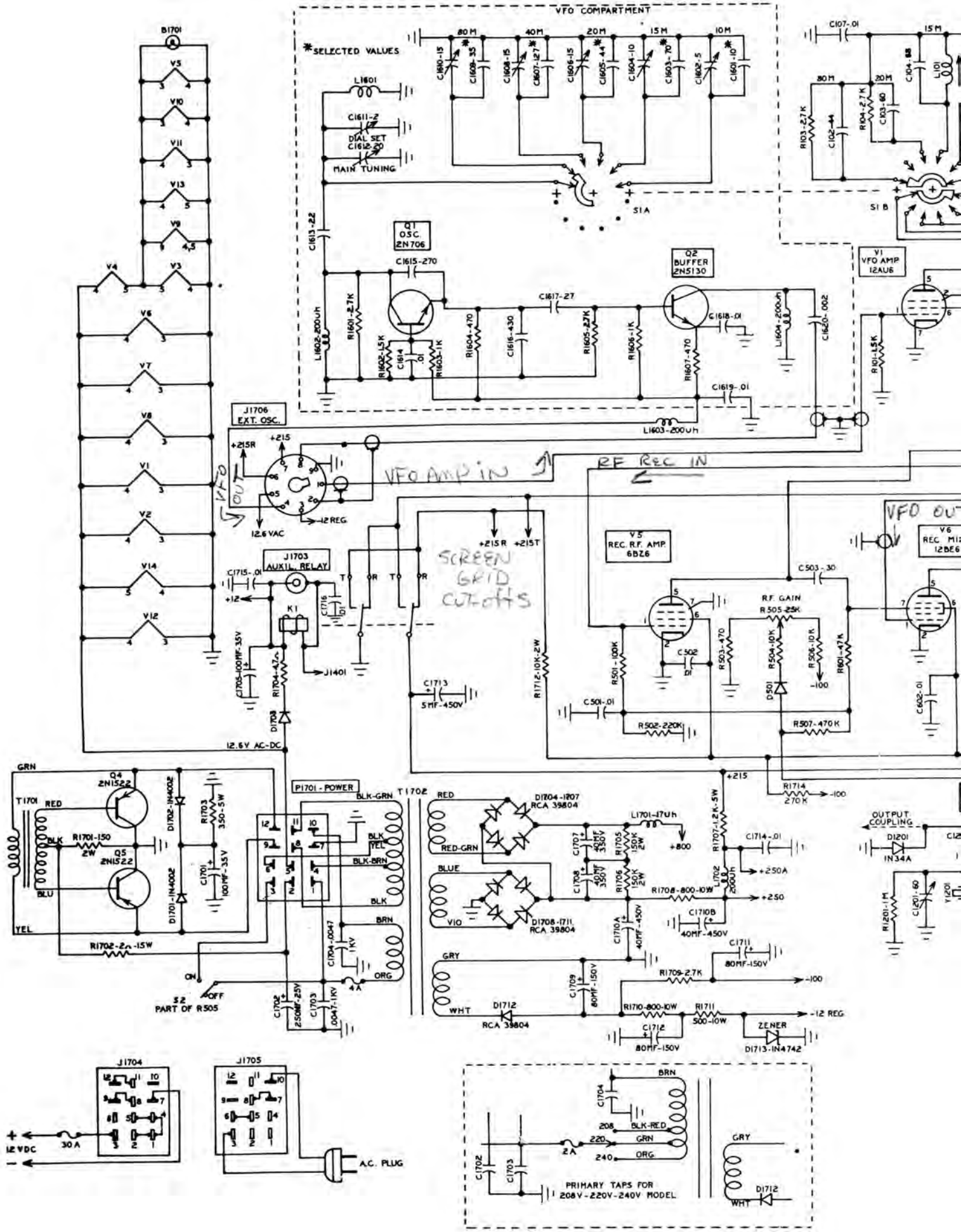
VFO COMPARTMENT
*SELECTED VALUES
80M
40M
20M
15M
10M
C1610-15
C1609-35
C1608-15
C1607-127
C1606-15
C1605-44
C1604-10
C1603-70
C1602-5
C1601-10
L1601
C1611-2
DIAL SET
C1612-20
MAIN TUNING
S1A
S1B
C1613-22
Q1
OSC.
2N706
C1615-270
Q2
BUFFER
2N5130
V1
VFO AMP
12AU6
C1617-27
C1618-01
C1619-.01
L1603-200uh
L1602-200uh
L1604-200uh
C1620-.002
R1601-2.7K
R1602-1.5K
R1603-1K
R1604-470
R1605-27K
R1606-1K
R1607-470
R101-1.5K
J1706
EXT. OSC.
+215R
+215
12.6VAC
12REG
VFO OUT
VFO AMP IN
RF REC IN
J1703
AUXIL. RELAY
C1715-.01
+12
K1
C1716
.01
J1401
C1703-100MF-35V
R1704-4.7Ω
D1703
12.6V AC-DC
+215R
+215T
SCREEN
GRID
CUT-OFFS
C1713
5MF-450V
R1712-10K-2W
V5
REC. R.F. AMP.
6BZ6
C503-.30
R.F. GAIN
R505-25K
R501-100K
C502
.01
R503-470
R504-10K
R506-10K
R601-47K
D501
-100
C501-.01
R502-220K
R507-470K
VFO OUT
V6
REC. MIX
12BE6
C602-.01
R1714
270K
-100
+215
GRN
Q4
2N1522
T1701
RED
BLK
R1701-150
2W
Q5
2N1522
BLU
YEL
D1702-1N4002
D1701-1N4002
R1703
350-5W
C1701
100MF-35V
R1702-2Ω-15W
P1701-POWER
BLK-GRN
BLK
YEL
BLK-BRN
BLK
BRN
ORG
C1704-.0047
1KV
4A
ON
OFF
S2
PART OF R505
C1702
250MF-25V
C1703
.0047-1KV
T1702
RED
RED-GRN
BLUE
VIO
GRY
WHT
D1704-1207
RCA 39804
D1708-1711
RCA 39804
L1701-17Uh
+800
C1707
40MF
350V
R1705
150K
2W
C1708
40MF
350V
R1706
150K
2W
R1707-1.2K-5W
+215
C1714-.01
+250A
L1702
200Uh
R1708-800-10W
+250
C1710B
40MF-450V
C1710A
40MF-450V
C1711
80MF-150V
R1709-2.7K
-100
C1709
80MF-150V
D1712
RCA 39804
R1710-800-10W
R1711
500-10W
-12 REG.
C1712
80MF-150V
ZENER
D1713-1N4742
OUTPUT
COUPLING
D1201
IN34A
R1201-1M
C1201-60
J1704
12VDC
30A
J1705
A.C. PLUG
BRN
C1704
208
BLK-RED
220
GRN
240
ORG
2A
C1702
C1703
PRIMARY TAPS FOR
208V-220V-240V MODEL
GRY
D1712
WHT

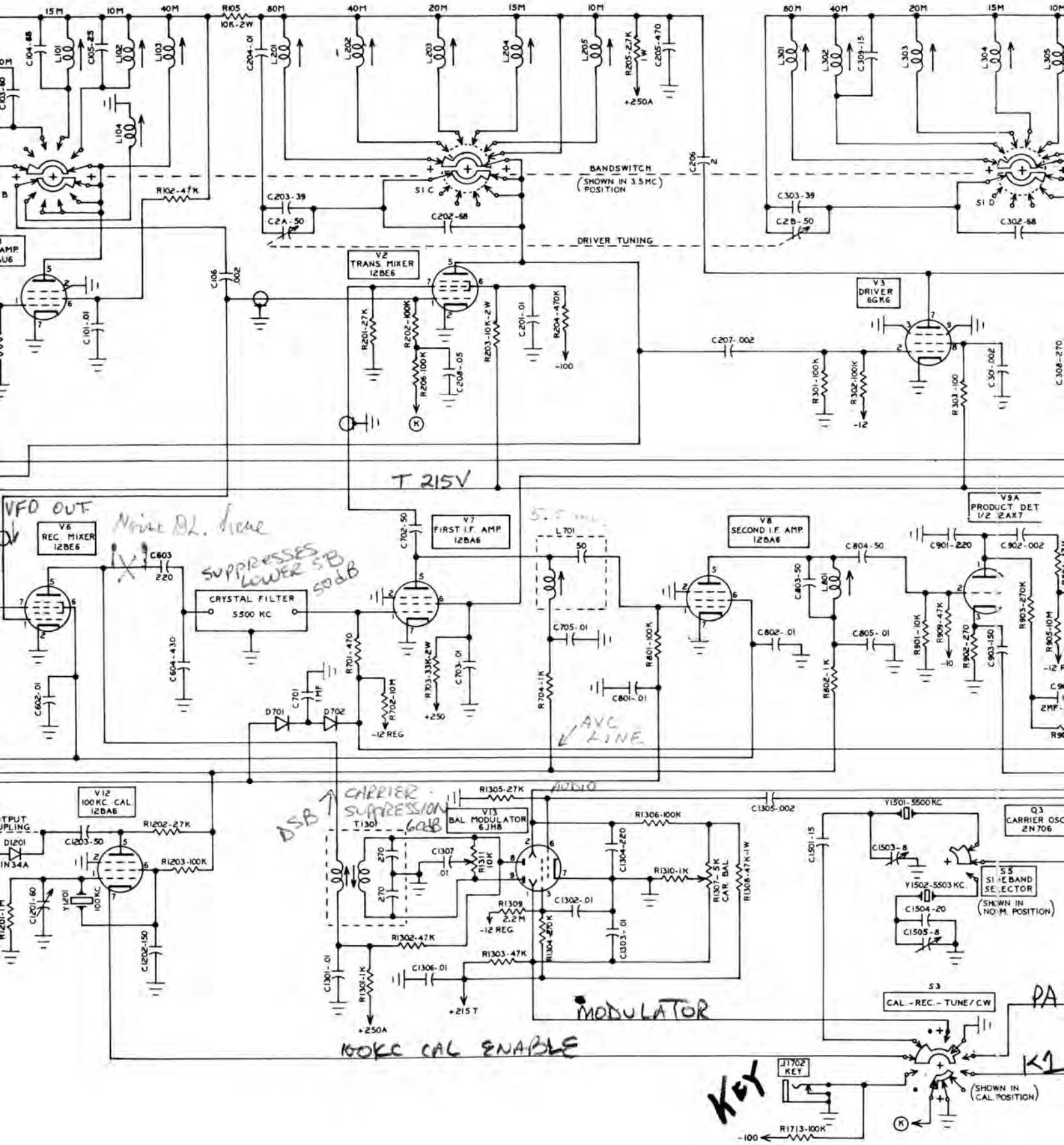

SCHEMATIC DIAGRAM
SWAN ELECTRONICS

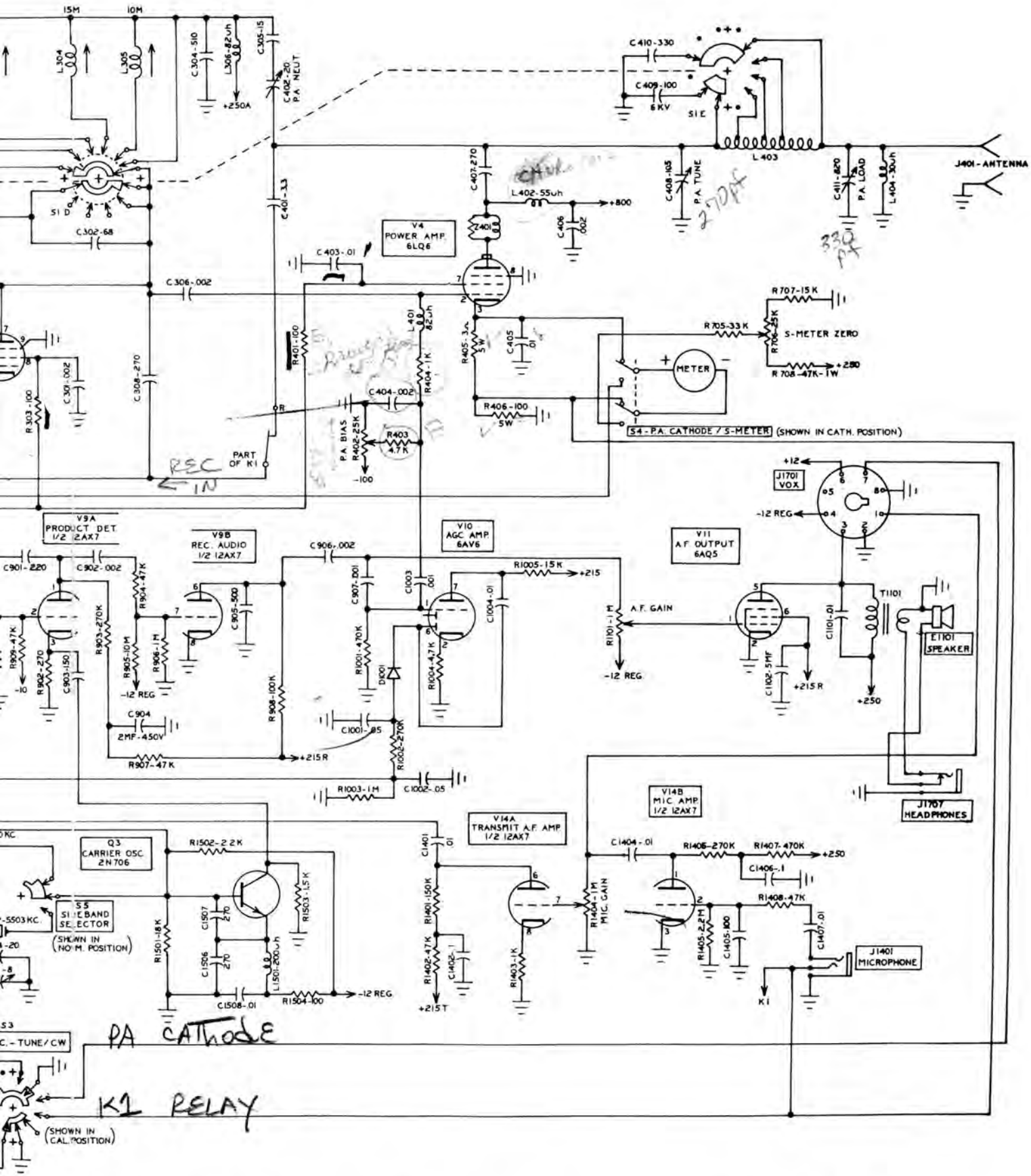

MATIC DIAGRAM - SWAN CYGNET - MODEL 270 SINGLE SIDEBAND TRANSCEIVER © 3-18-70
N ELECTRONICS - Oceanside, Calif.

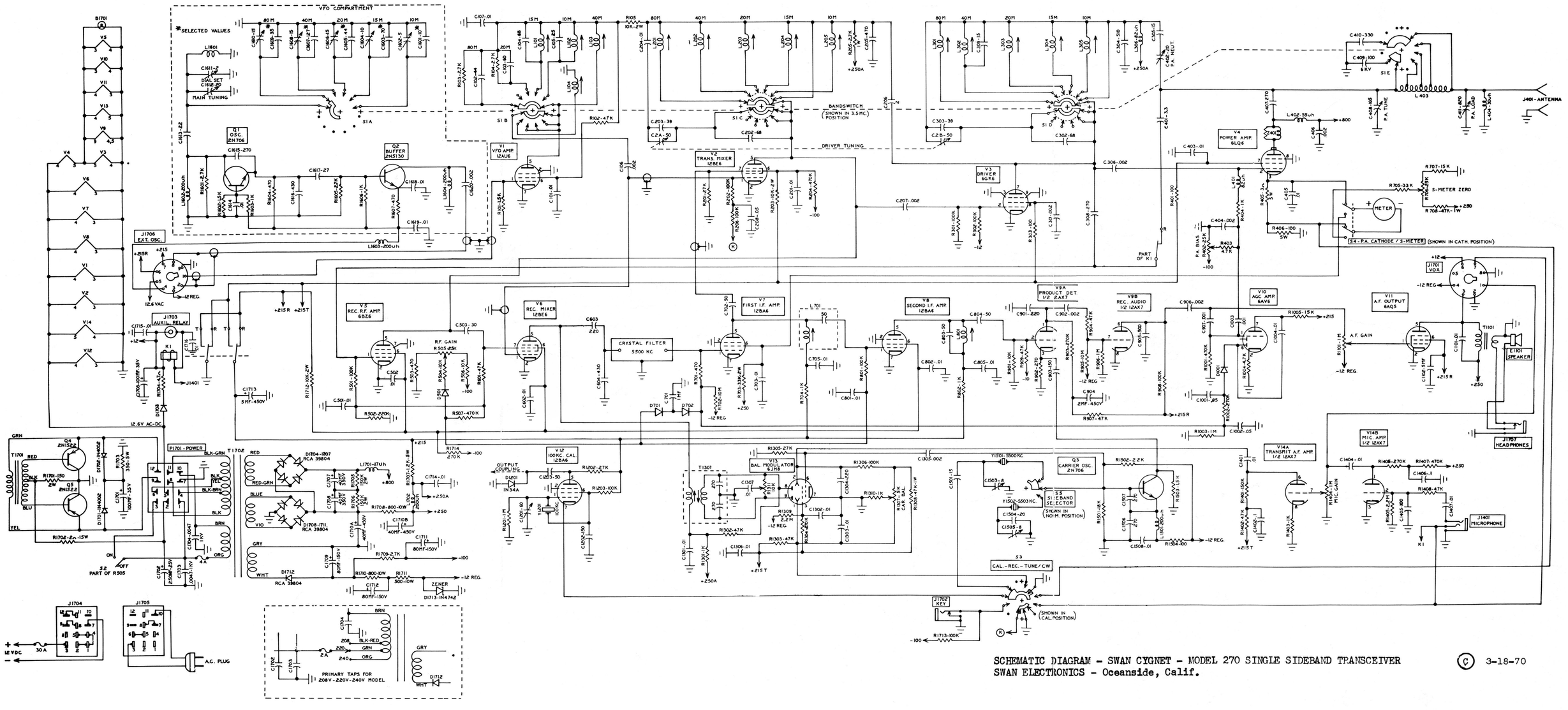

SCHEMATIC DIAGRAM - SWAN CYGNET - MODEL 270 SINGLE SIDEBAND TRANSCEIVER
SWAN ELECTRONICS - Oceanside, Calif.

© 3-18-70